2025 FRONTIER

OWNER'S MANUAL
and MAINTENANCE INFORMATION

For your safety, read carefully and keep in this vehicle.

CALIFORNIA PROPOSITION 65 WARNING

⚠WARNING

Operating, servicing and maintaining a passenger vehicle or off-highway motor vehicle can expose you to chemicals including engine exhaust, carbon monoxide, phthalates, and lead, which are known to the State of California to cause cancer and birth defects or other reproductive harm. To minimize exposure, avoid breathing exhaust, do not idle the engine except as necessary, service your vehicle in a well-ventilated area and wear gloves or wash your hands frequently when servicing your vehicle. For more information go to www.P65Warnings.ca.gov/passenger-vehicle.

This manual was prepared to help you understand the operation and maintenance of your vehicle so that you may enjoy many miles (kilometers) of driving pleasure. Please read through this manual before operating your vehicle.

A separate Warranty Information Booklet explains details about the warranties covering your vehicle. The "Maintenance and schedules" section of this manual explains details about maintaining and servicing your vehicle. Additionally, a separate Customer Care/Lemon Law Booklet (U.S. only) will explain how to resolve any concerns you may have with your vehicle, and clarify your rights under your state's lemon law.

In addition to factory-installed options, your vehicle may also be equipped with additional accessories installed prior to delivery. It is recommended that you visit a NISSAN dealer for details concerning the particular accessories with which your vehicle is equipped. It is important that you familiarize yourself with all disclosures, warnings, cautions and instructions concerning proper use of such accessories prior to operating the vehicle and/or accessory. It is recommended that you visit a NISSAN dealer for details concerning the particular accessories with which your vehicle is equipped.

A NISSAN dealership knows your vehicle best. When you require any service or have any questions, they will be glad to assist you with the extensive resources available to them.

READ FIRST—THEN DRIVE SAFELY

Before driving your vehicle, please read this Owner's Manual carefully. This will ensure familiarity with controls and maintenance requirements assisting you in the safe operation of your vehicle.

⚠ WARNING

IMPORTANT SAFETY INFORMATION REMINDERS!

Follow these important driving rules to help ensure a safe and comfortable trip for you and your passengers!

- **NEVER drive under the influence of alcohol or drugs.**
- **ALWAYS observe posted speed limits and never drive too fast for conditions.**
- **ALWAYS give your full attention to driving and avoid using vehicle features or taking other actions that could distract you.**
- **ALWAYS use your seat belts and appropriate child restraint systems. Pre-teen children should be seated in the rear seat.**
- **ALWAYS provide information about the proper use of vehicle safety features to all occupants of the vehicle.**

- **ALWAYS review this Owner's Manual for important safety information.**

For descriptions specified for 4-wheel drive models, a 4x4 mark is placed at the beginning of the applicable sections/items.

As with other vehicles with features for off-road use, failure to operate 4-wheel drive models correctly may result in loss of control or a collision. For additional information, see "Driving safety precautions" (P. 280).

ON-PAVEMENT AND OFF-ROAD DRIVING

This vehicle will handle and maneuver differently from an ordinary passenger car because it has a higher center of gravity for off-road use. As with other vehicles with features of this type, failure to operate this vehicle correctly may result in loss of control or an accident.

For additional information, see "On-pavement and off-road driving precautions" (P. 278), "Avoiding collision and roll-over" (P. 278) and "Driving safety precautions" (P. 280).

MODIFICATION OF YOUR VEHICLE

This vehicle should not be modified. Modification could affect its performance, safety, emissions or durability and may even violate governmental regulations. In addition, damage or performance problems resulting from modifications may not be covered under NISSAN warranties.

⚠ WARNING

Installing an aftermarket On-Board Diagnostic (OBD) plug-in device that uses the port during normal driving, for example remote insurance company monitoring, remote vehicle diagnostics, telematics or engine reprogramming, may cause interference or damage to vehicle systems. We do not recommend or endorse the use of any aftermarket OBD plug-in devices, unless specifically approved by NISSAN. The vehicle warranty may not cover damage caused by any aftermarket plug-in device.

WHEN READING THE MANUAL

This manual includes information for all features and equipment available on this model. Features and equipment in your vehicle may vary depending on model, trim level, options selected, order, date of production, region or availability. Therefore, you may find information about features or equipment that are not included or installed on your vehicle.

All information, specifications and illustrations in this manual are those in effect at the time of printing. NISSAN reserves the right to change specifications, performance, design or component suppliers without notice and without obligation. From time to time, NISSAN may update or revise this manual to provide Owners with the most accurate information currently available. Please carefully read and retain with this manual all revision updates sent to you by NISSAN to ensure you have access to accurate and up-to-date information regarding your vehicle. Current versions of vehicle Owner's Manuals and any updates can also be found in the Owner section of the NISSAN website at **https://owners.nissanusa.com/nowners/navigation/manualsGuide**. If you have questions concerning any information in

your Owner's Manual, contact NISSAN Consumer Affairs. For contact information, refer to the NISSAN CUSTOMER CARE PROGRAM page in this Owner's Manual.

IMPORTANT INFORMATION ABOUT THIS MANUAL

You will see various symbols in this manual. They are used in the following ways:

⚠ WARNING

This is used to indicate the presence of a hazard that could cause death or serious personal injury. To avoid or reduce the risk, the procedures must be followed precisely.

⚠ CAUTION

This is used to indicate the presence of a hazard that could cause minor or moderate personal injury or damage to your vehicle. To avoid or reduce the risk, the procedures must be followed carefully.

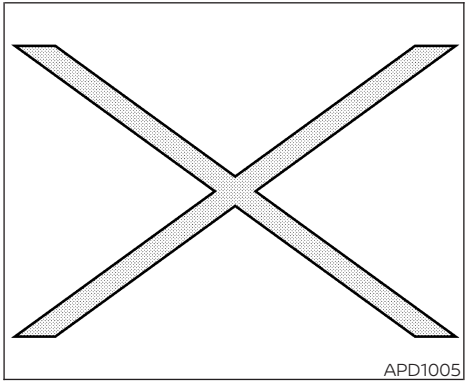

If you see this symbol, it means **"Do not do this"** or **"Do not let this happen."**

If you see a symbol similar to these in an illustration, it means the arrow points to the front of the vehicle.

Arrows in an illustration that are similar to these indicate movement or action.

Arrows in an illustration that are similar to these call attention to an item in the illustration.

CALIFORNIA PERCHLORATE ADVISORY

Some vehicle parts, such as lithium batteries, may contain perchlorate material. The following advisory is provided: "Perchlorate Material – special handling may apply. For additional information, refer to www.dtsc.ca.gov/hazardouswaste/perchlorate/".

QR CODE

The word "QR code" is registered trademark of DENSO WAVE INCORPORATED in Japan and other countries.

COPYRIGHT

© 2024 NISSAN NORTH AMERICA, INC.

All rights reserved. No part of this Owner's Manual may be reproduced or stored in a retrieval system, or transmitted in any form, or by any means, electronic, mechanical, photocopying, recording or otherwise, without the prior written permission of Nissan North America, Inc.

NISSAN CUSTOMER CARE PROGRAM

NISSAN CARES . . .

Both NISSAN and your NISSAN dealer are dedicated to serving all your automotive needs. Your satisfaction with your vehicle and your NISSAN dealer are our primary concerns. Your NISSAN dealer is always available to assist you with all your automobile sales and service needs.

However, if there is something that your NISSAN dealer cannot assist you with or you would like to provide NISSAN directly with comments or questions, please contact the NISSAN Consumer Affairs Department using our toll-free number:

For U.S. customers
1-800-NISSAN-1
(1-800-647-7261)

For Canadian customers
1-800-387-0122

The Consumer Affairs Department will ask for the following information:

- Your name, address, and telephone number
- Vehicle identification number (attached to the top of the instrument panel on the driver's side)
- Date of purchase
- Current odometer reading
- Your NISSAN dealer's name
- Your comments or questions

OR

You can write to NISSAN with the information at:

For U.S. customers
Nissan North America, Inc.
Consumer Affairs Department
P.O. Box 685003
Franklin, TN 37068-5003
or via e-mail at:
nnaconsumeraffairs@nissan-usa.com

For Canadian customers
Nissan Canada Inc.
5290 Orbitor Drive
Mississauga, Ontario L4W 4Z5
or via e-mail at:
information.centre@nissancanada.com

If you prefer, visit us at:
www.nissanusa.com (for U.S. customers)
or
www.nissan.ca (for Canadian customers)

We appreciate your interest in NISSAN and thank you for buying a quality NISSAN vehicle.

NISSAN SOFTWARE LICENSE

- Your vehicle includes physical parts and/or physical components of such parts on which software and/or firmware ("Software") is embedded or installed. Additionally, updates to Software may be made available by NISSAN for download and installation by owners from time to time as determined by NISSAN in its sole discretion. Such Software, and all updates thereto, including updates delivered by NISSAN to your vehicle over the air (collectively "Updates"), are licensed, and not sold, to you. A portion of the Software may contain or consist of open source software, which may be used under the terms and conditions of the specific license under which the open source software is distributed. For other Software, including Software for which there is no separate license agreement between you and the manufacturer or owner of the Software, the terms and conditions governing your right to use and the use of the installed Software, including any Updates, applications, services, and content provided for or through the Software, are set forth in the End User License Agreement found at:

  For U.S. customers — https://www.nissanusa.com/owners/ownership

  For Canadian customers — https://www.nissan.ca/owners/owner-support.html

  Your use of the Software, including any Updates, constitutes consent to the End User License Agreement's terms and conditions.
- PLEASE NOTE: The End User License Agreement contains an arbitration clause. You may opt out of this arbitration clause within 30 days of the date of your vehicle purchase by sending a signed, written notice to NISSAN at the following address:

  For U.S. customers
  Nissan North America, Inc.
  Consumer Affairs Department
  P.O. Box 685003
  Franklin, TN 37068-5003

  For Canadian customers
  Nissan Canada Inc.
  Consumer Affairs Department
  5290 Orbitor Drive
  Mississauga, Ontario L4W 4Z5
- Please refer to "Updating system software" in the 5. Information section or "Software Update" in the 2. Getting Started section of the NissanConnect® Owner's Manual for information about installing Over-the-Air Updates. For questions or assistance concerning installation of any over-the-air Update, you may contact NISSAN Owner Services at 1-800-333-0207 for U.S. customers, or for Canadian customers NISSAN Consumer Affairs at consumeraffairs@nissancanada.com. You may also choose to visit a NISSAN dealer for assistance - charges may apply.

Table of contents

Illustrated table of contents	0
Safety-Seats, seat belts and supplemental restraint system	1
Instruments and controls	2
Pre-driving checks and adjustments	3
Monitor, climate, audio, phone and voice recognition systems	4
Starting and driving	5
In case of emergency	6
Appearance and care	7
Do-it-yourself	8
Maintenance and schedules	9
Technical and consumer information	10
Index	11

0 Illustrated table of contents

Air bags, seat belts and child restraints 2
Exterior front 3
Exterior rear 4
Passenger compartment 5
Instrument panel 6
Engine compartment check locations 8
Warning and indicator lights 9

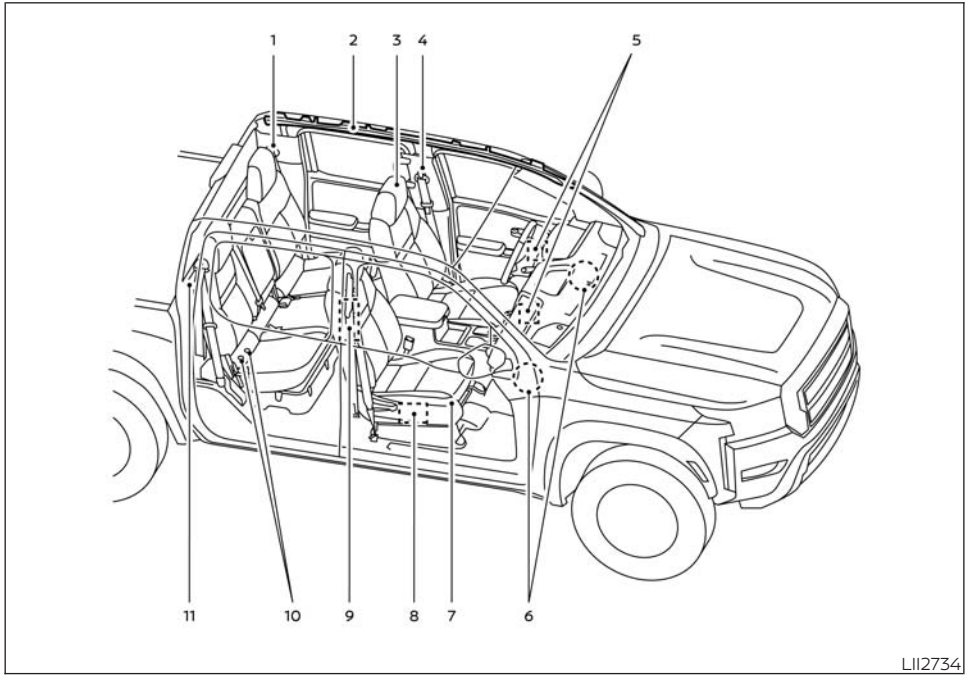

1. Rear outboard seat belts with pretensioner(s) (P. 99)
2. Roof-mounted curtain side-impact and rollover supplemental air bag (P. 96)
3. Head restraints/headrests (P. 20)
4. Front outboard seat belts with shoulder height adjuster and pretensioner(s) (P. 99, 31,)
5. Supplemental front-impact air bags (P. 96)
6. Driver supplemental knee air bag (P. 97)
   Front passenger supplemental knee air bag (P. 97)
7. Seats (P. 13)
8. Occupant classification sensor (weight sensor) (P. 90)
9. Front seat-mounted side-impact supplemental air bag (P. 96)
10. LATCH (Lower Anchors and Tethers for CHildren) system (P. 38)
11. Top tether strap anchor (P. 41)

Refer to the page number indicated in parentheses for operating details.

EXTERIOR FRONT

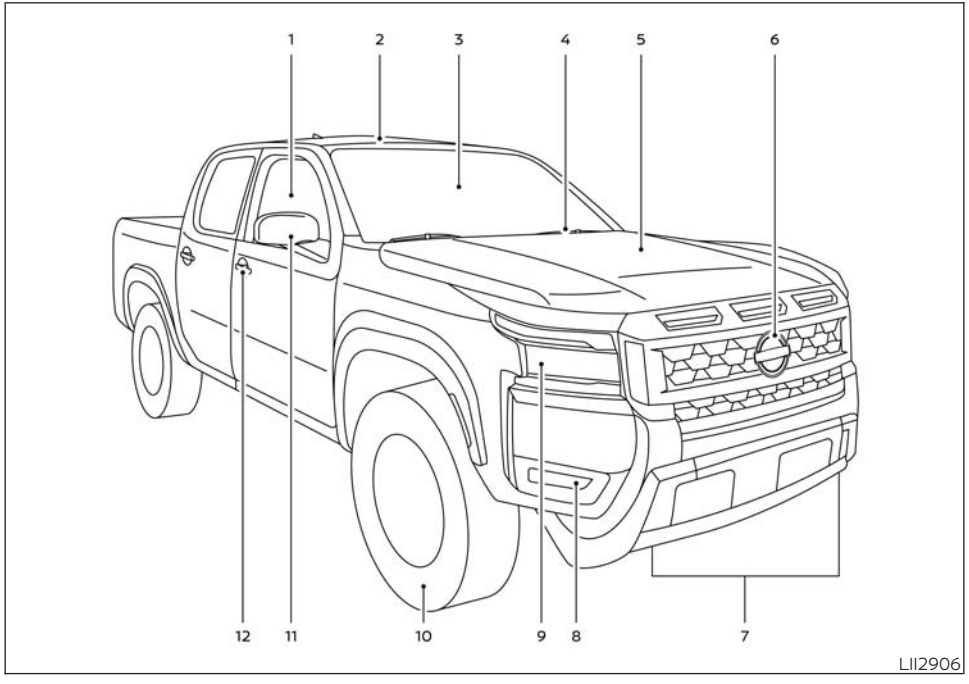

1. Windows (P. 181)
2. Moonroof (if so equipped) (P. 184)
3. Windshield (P. 450)
4. Wiper and washer switch (P. 147)
5. Engine hood (P. 213)
6. Front view camera (if so equipped) (P. 236)
7. Front recovery hooks (if so equipped) (P. 421)
8. Fog light switch (if so equipped) (P. 155)
   Daytime Running Lights (DRL) system (if so equipped) (P. 153)
9. Headlight and turn signal switch (P. 148)
   Daytime Running Lights (DRL) system (if so equipped) (P. 153)
   LED Daytime Running Lights (DRL) system (if so equipped) (P. 153)
   Replacing bulbs (P. 457)
10. Tire pressure (P. 461)
    Flat tire (P. 407)
    Tire chains (P. 469)
11. Mirrors (P. 218)
    Side view camera (if so equipped) (P. 236)
12. Door locks (P. 196)
    NISSAN Intelligent Key® (P. 194)

Refer to the page number indicated in parentheses for operating details.

EXTERIOR REAR

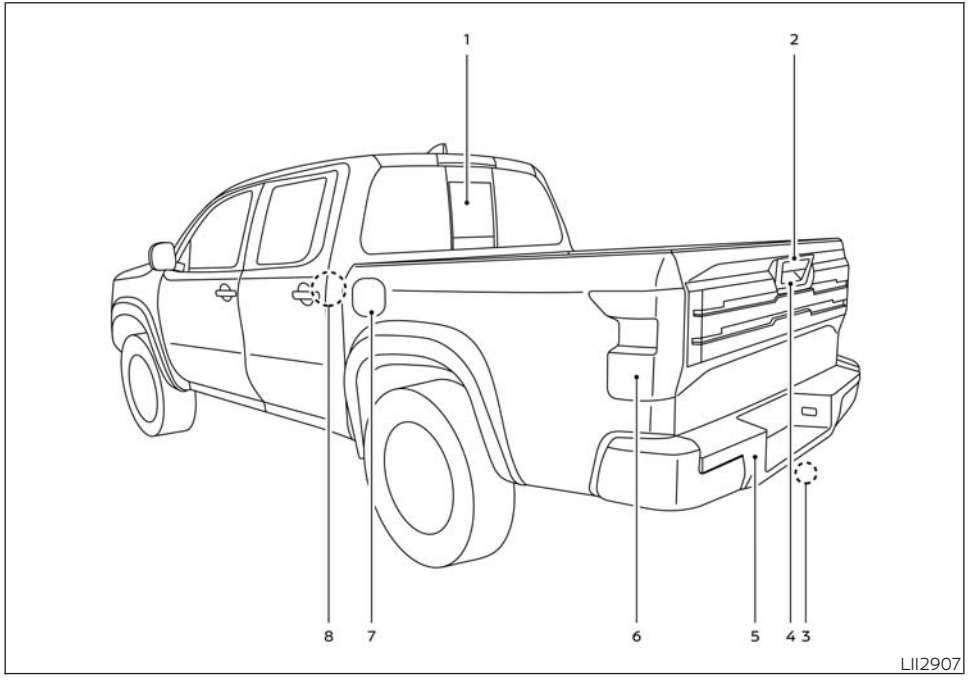

1. Rear sliding window (if so equipped) (P. 183)
2. Vehicle loading (P. 516)
   Tailgate (P. 220)
   Truck box (P. 220)
3. Towing (if so equipped) (P. 526)
4. Rearview camera (P. 228, P. 236)
5. Rear sonar sensors (P. 391)
6. Replacing bulbs (P. 460)
7. Fuel-filler cap (P. 214)
   Fuel recommendation (P. 503)
8. Child safety rear door lock (P. 199)

Refer to the page number indicated in parentheses for operating details.

PASSENGER COMPARTMENT

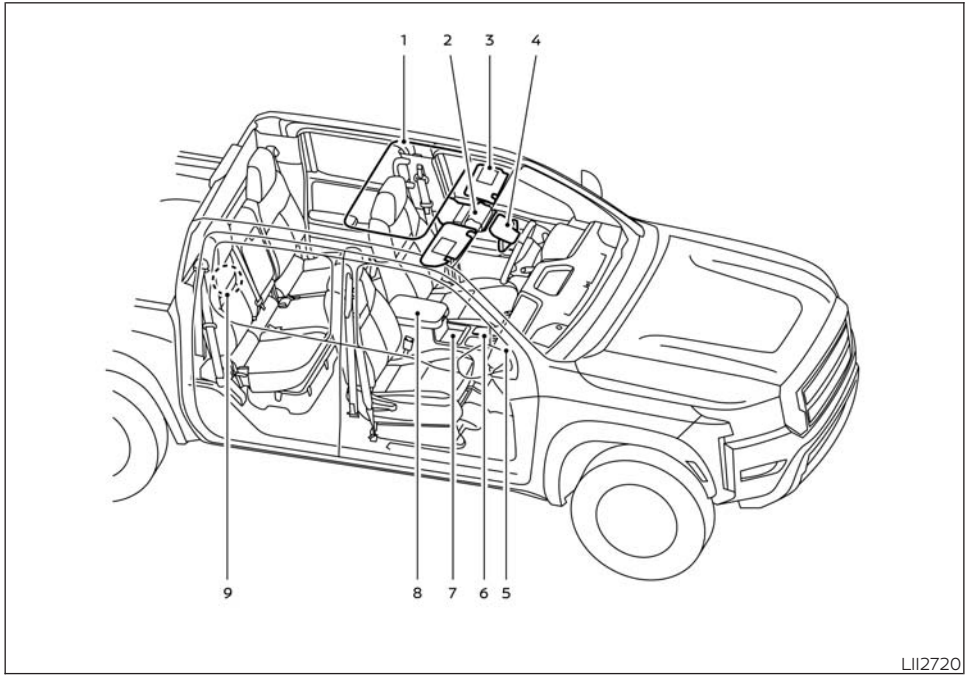

1. Power moonroof (if so equipped) (P. 184)
2. Map lights (P. 186)
3. Sun visors (P. 217)
4. Rearview mirror (P. 218)
5. Glove box (P. 177)
6. Shift lever (P. 289)
   Cup holders (P. 178)
7. Wireless charger (if so equipped) (P. 166)
8. Console box (P. 177)
9. Spare tire tools location (P. 411)

Refer to the page number indicated in parentheses for operating details.

INSTRUMENT PANEL

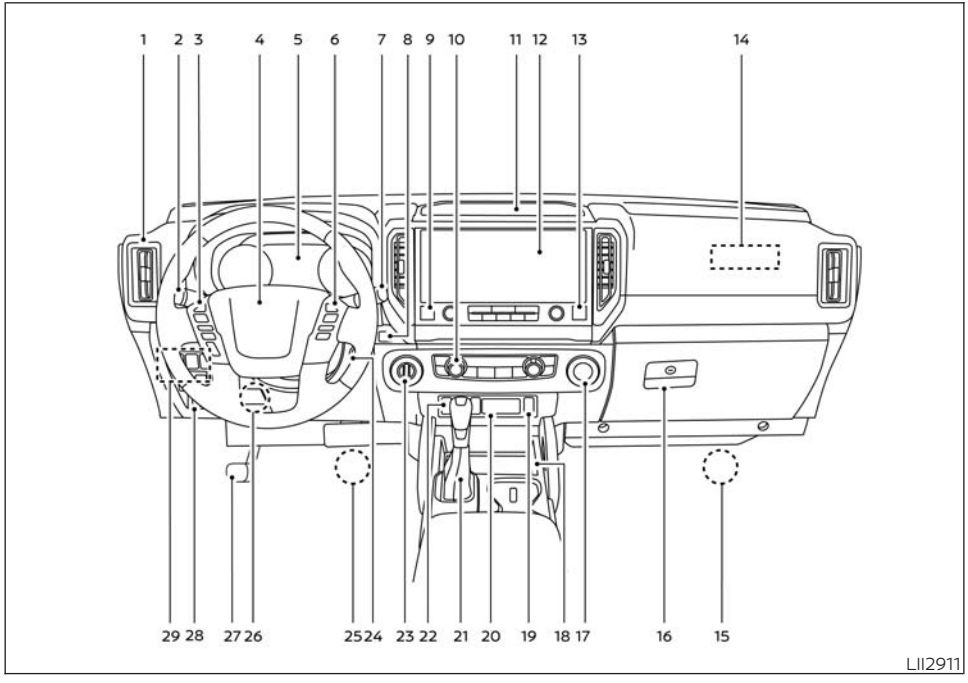

1. Vents (P. 252)
2. Headlight/fog lights (if so equipped)/ turn signal switch (P. 148, 155)
3. Bluetooth® Hands-Free Phone System (P. 227)
   Audio system controls (P. 227)
4. Driver supplemental air bag (P. 96)
   Horn (P. 155)
5. Meters and gauges (P. 107)
   Warning and indicator lights (P. 114)
   Vehicle information display (P. 124)
6. Intelligent cruise control (ICC) switches (P. 319)
7. Wiper and washer switch (P. 147)
8. Idling stop OFF switch (P. 402)
9. Hazard warning flasher switch (P. 406)
10. Climate controls (P. 252, 261)
    Outside mirror defroster switch (if so equipped) (P. 148)
11. Storage (P. 173)
12. Audio system (P. 227)
13. Front passenger air bag status light (P. 90)
14. Front passenger supplemental air bag (P. 96)
15. Front passenger supplemental knee air bag (P. 97)
16. Glove box (P. 177)
17. Power outlet (P. 169)
18. Storage (P. 173)
19. Heated seats (if so equipped) (P. 156)
20. USB connection port (P. 227)
    AUX input (if so equipped) (P. 227)
21. Shift lever (P. 289)

22. Heated steering wheel switch (if so equipped) (P. 157)
    Parking Aids system switch (if so equipped) (P. 162)
23. 4WD shift switch (if so equipped) (P. 379)
24. Push-button ignition switch (P. 282)
25. Driver supplemental knee air bag (P. 97)
26. Tilt and telescopic steering wheel control (P. 216)
27. Parking brake (P. 293)
28. Hood release (P. 213)
29. Cargo lamp switch (P. 156)
    Electronic locking rear differential (E-Lock) system switch (if so equipped) (P. 160)
    Hill descent control switch (if so equipped) (P. 158)
    Power inverter switch (if so equipped) (P. 161)
    Tow mode switch (if so equipped) (P. 163)
    Warning systems switch (P. 160)
    Vehicle Dynamic Control (VDC) OFF switch (P. 158)

ENGINE COMPARTMENT CHECK LOCATIONS

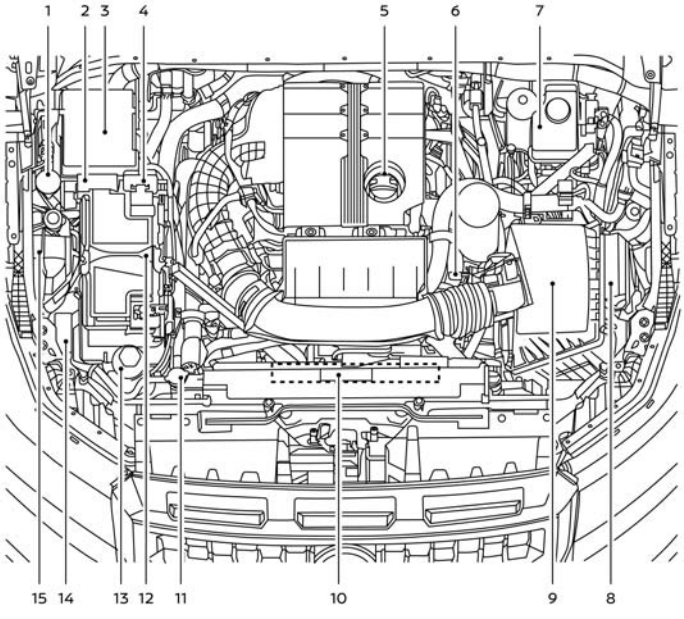

LDI3793

3.8L 6 cylinder (VQ38DD engine model)

1. Windshield-washer fluid reservoir (P. 443)
2. Fusible link and relay box(P. 453)
3. Fuse/Fusible link box (P. 453)
4. Fusible link (P. 453)
5. Engine oil filler cap (P. 436)
6. Engine oil dipstick (P. 436)
7. Brake fluid reservoir (P. 443)
8. Relay box (P. 452)
9. Air cleaner (P. 449)
10. Drive belt location (P. 447)
11. Radiator cap (P. 434)
12. Battery and battery cover (P. 445)
13. Power steering fluid reservoir (P. 442)
14. Relay box (P. 452)
15. Engine coolant reservoir (P. 434)

NOTE:
Your vehicle may not be equipped with an engine cover.

Refer to the page number indicated in parentheses for operating details.

WARNING AND INDICATOR LIGHTS

Warning/ Indicator light (red)	Name	Page
ATP	Automatic Transmission Park warning light (4x4 model)	114
BRAKE or	Brake warning light	115
	Charge warning light	116
	Electric shift control system warning light	116
	Engine oil pressure warning light	116

Warning/ Indicator light (red)	Name	Page
	Master warning light	116
	Seat belt warning light and chime	117
	Security indicator light	117
	Supplemental air bag warning light	117

Warning/ Indicator light (yellow)	Name	Page
ABS or	Anti-lock Braking System (ABS) warning light	118
	Automatic Emergency Braking (AEB) with Pedestrian Detection system warning light	118
AT CHECK	Automatic Transmission check warning light	118
DIFF LOCK	Electronic locking rear differential (E-Lock) system ON indicator light (if so equipped)	118

Warning/ Indicator light (yellow)	Name	Page
OFF	Front passenger air bag status light	119
	Hill descent control system ON indicator light (if so equipped)	119
	Low tire pressure warning light	119
	Malfunction Indicator Light (MIL)	121
	Master warning light	121
	Rear Automatic Braking (RAB) system warning light	121

Warning/ Indicator light (yellow)	Name	Page
	Slip indicator light	122
OFF	Vehicle Dynamic Control (VDC) OFF indicator light	122

Warning/ Indicator light (other)	Name	Page
	Front fog light indicator light (green) (if so equipped)	122
A	High Beam Assist indicator light (green)	122

Warning/ Indicator light (other)	Name	Page
	High beam indicator light (blue)	123
	Side light and headlight indicator light (green)	123
TOW	TOW mode ON indicator light (green) (if so equipped)	123
	Turn signal/ hazard indicator lights (green)	123

1 Safety-Seats, seat belts and supplemental restraint system

Seats . . . 13
Basic Information . . . 13
Front manual seat adjustment (if so equipped) . . . 14
Front power seat adjustment (if so equipped) . . . 15
Rear bench seat (if so equipped) . . . 17
Jump seat (if so equipped) . . . 17
Armrest (if so equipped) . . . 17
Flexible seating . . . 18
Head restraints/headrests . . . 20
Basic Information . . . 20
Adjustable head restraint/headrest components . . . 22
Non-adjustable head restraint/headrest components . . . 22
Remove . . . 22
Install . . . 23
Adjust . . . 23
Seat belts . . . 25
Precautions on seat belt usage . . . 25
Seat belt warning light and chime . . . 28
Pregnant women . . . 28
Injured persons . . . 28
Three-point type seat belt with retractor . . . 29
Seat belt extenders . . . 32
Seat belt maintenance . . . 32
Child safety . . . 33
Basic Information . . . 33
Infants . . . 34
Small children . . . 34
Larger children . . . 34
Child restraints . . . 35
Precautions on child restraints . . . 35
LATCH (Lower Anchors and Tethers for CHildren) system . . . 38
Rear-facing child restraint installation using LATCH (Crew Cab models) . . . 42
Rear-facing child restraint installation using LATCH — jump seat (King Cab® models) . . . 44
Rear-facing child restraint installation using the seat belts (Crew Cab models) . . . 47
Rear-facing child restraint installation using the seat belts — jump seat (King Cab® models) . . . 50

Forward-facing child restraint installation using LATCH (Crew Cab models) 54
Forward-facing child restraint installation using LATCH — jump seat (King Cab® models) 58
Forward-facing child restraint installation using the seat belts — front passenger and rear bench seat (Crew Cab models) 62
Forward-facing child restraint installation using the seat belts — front passenger and jump seats (King Cab® models) 67
Booster seats 73
Supplemental Restraint System (SRS) 79
Precautions on SRS 79
Supplemental air bag warning labels 100
Supplemental air bag warning light 100

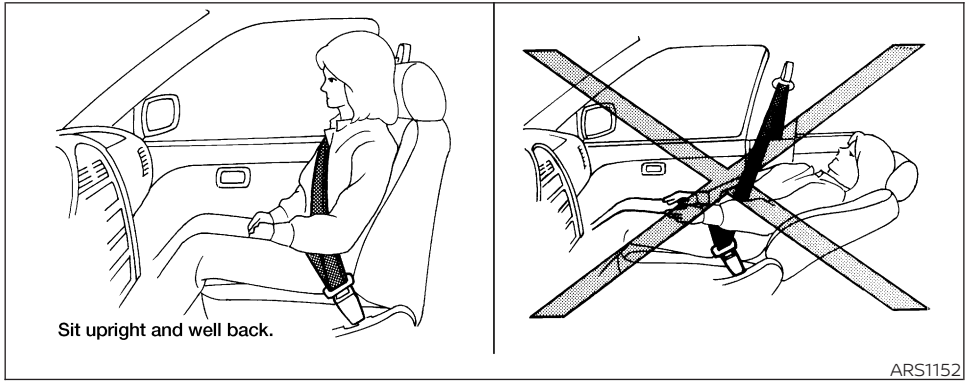

BASIC INFORMATION

⚠ WARNING

- **Do not ride in a moving vehicle when the seatback is reclined. This can be dangerous. The shoulder belt will not be against your body. In an accident, you could be thrown into it and receive neck or other serious injuries. You could also slide under the lap belt and receive serious internal injuries.**
- **For the most effective protection when the vehicle is in motion, the seat should be upright. Always sit well back and upright in the seat with both feet on the floor and adjust the seat properly. For additional information, see "Precautions on seat belt usage" (P. 25).**
- **After adjustment, gently rock in the seat to make sure it is securely locked.**
- **Do not leave children unattended inside the vehicle. They could unknowingly activate switches or controls or make the vehicle move. Unattended children could become involved in serious accidents.**
- **To help avoid risk of injury or death through unintended operation of the vehicle and/or its systems, do not leave children, people who require the assistance of others or pets unattended in your vehicle. Additionally, the temperature inside a closed vehicle on a warm day can quickly become high enough to cause a significant risk of injury or death to people and pets.**
- **Do not adjust the driver's seat while driving so full attention may be given to vehicle operation. The seat may move suddenly and could cause loss of control of the vehicle.**
- **The seatback should not be reclined any more than needed for comfort. Seat belts are most effective when the passenger sits well back and straight up in the seat. If the seatback is reclined, the risk of sliding under the lap belt and being injured is increased.**

⚠ CAUTION

When adjusting the seat positions, be sure not to contact any moving parts to avoid possible injuries and/or damage.

FRONT MANUAL SEAT ADJUSTMENT (if so equipped)

Basic Information

Your vehicle seats can be adjusted manually. For additional information about adjusting the seats, refer to the steps outlined in this section.

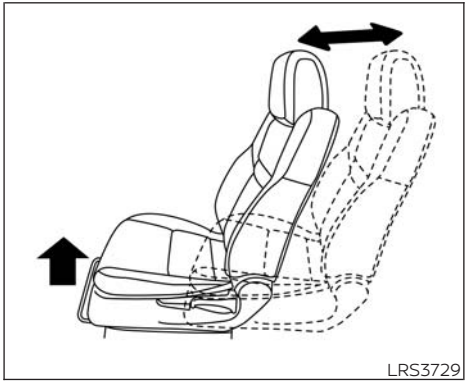

Forward and backward

Pull the lever up and hold it while you slide the seat forward or backward to the desired position. Release the lever to lock the seat in position.

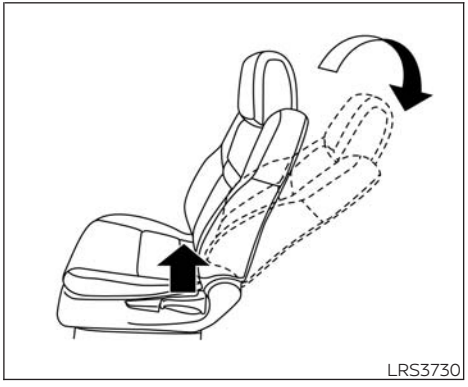

Reclining

To recline the seatback, pull the lever up and lean back. To bring the seatback forward, pull the lever up and lean your body forward. Release the lever to lock the seatback in position.

The reclining feature allows adjustment of the seatback for occupants of different sizes for added comfort and to help obtain proper seat belt fit. For additional information, see "Precautions on seat belt usage" (P. 25). Also, the seatback can be reclined to allow occupants to rest when the vehicle is parked.

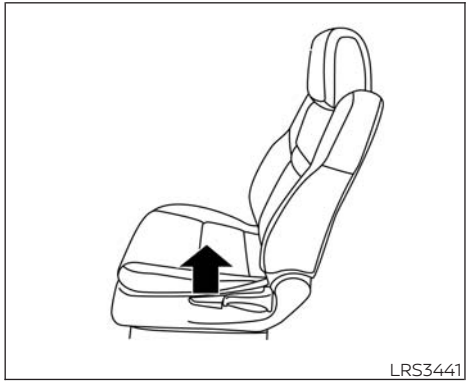

Seat lifter (driver's seat)

Pull up or push down the adjusting lever to adjust the height of the seat cushion to the desired position.

FRONT POWER SEAT ADJUSTMENT (if so equipped)

Operating tips

- The power seat motor has an auto-reset overload protection circuit. If the motor stops during operation, wait 30 seconds then reactivate the switch.
- Do not operate the power seat switch for a long period of time when the engine is off. This will discharge the battery.

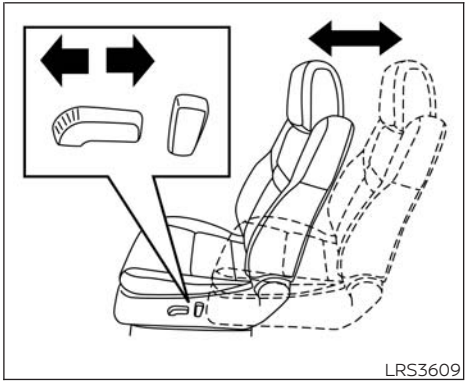

Forward and backward

Moving the switch as shown will slide the seat forward or backward to the desired position.

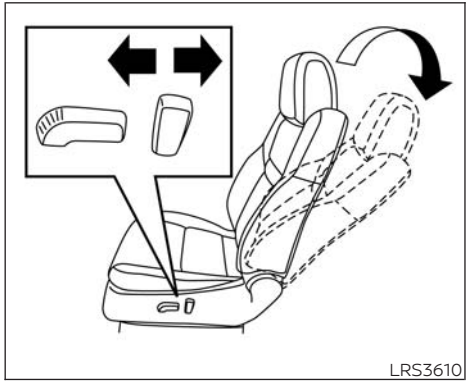

Reclining

Move the recline switch as shown until the desired angle is obtained.

The reclining feature allows adjustment of the seatback for occupants of different sizes for added comfort and to help obtain proper seat belt fit. For additional information, see "Precautions on seat belt usage" (P. 25). Also, the seatback can be reclined to allow occupants to rest when the vehicle is parked.

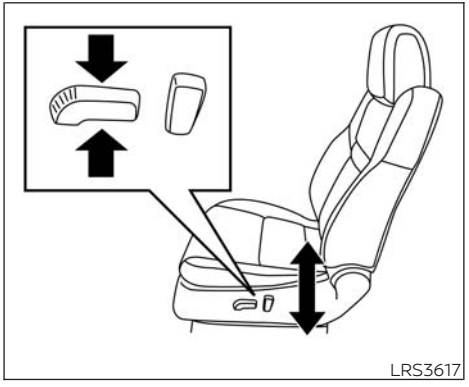

Seat lifter (driver's seat)

Move the switch as shown to adjust the height of the seat.

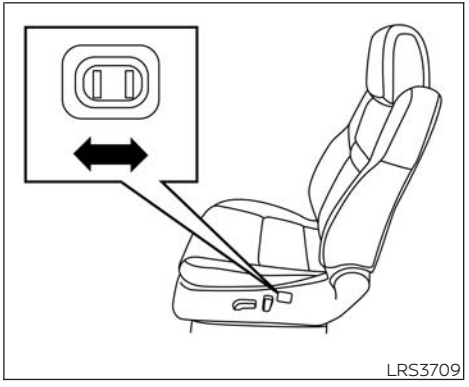

Lumbar support (driver's seat)

The lumbar support feature provides adjustable lower back support to the driver. Push the switch as shown to adjust the seat lumbar area.

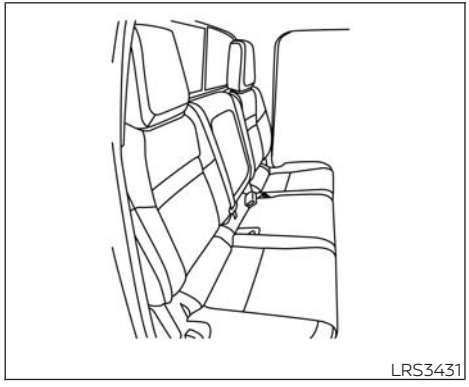

REAR BENCH SEAT (if so equipped)

The rear bench seat is non-adjustable. However, the seats can be folded up and folded to lay flat. For additional information, see "Flexible seating" (P. 18).

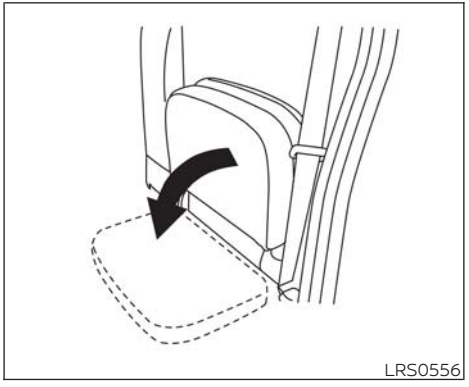

JUMP SEAT (if so equipped)

⚠WARNING

- **Do not use a child restraint in the driver's side jump seat. This seating position is not suitable for child restraint installation. A child restraint can be installed in the passenger's side jump seat when the seat extension is unfolded from the seat base.**
- **When folding the jump seat, be careful not to squeeze your finger between the seat cushion and the body side.**

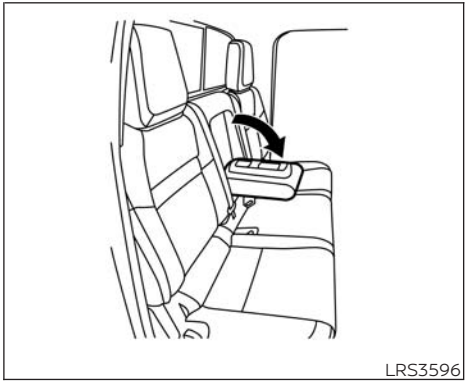

ARMREST (if so equipped)

The rear bench seat comes equipped with an armrest. Pull the armrest down as shown.

FLEXIBLE SEATING

Basic Information

⚠ WARNING

- **Never allow anyone to ride in the cargo area or on the rear seats when they are in the fold-down position. In a collision, people riding in these areas without proper restraints are more likely to be seriously injured or killed.**
- **Do not allow people to ride in any area of your vehicle that is not equipped with seats and seat belts. Be sure everyone in your vehicle is in a seat and using a seat belt properly.**
- **Do not allow more than one person to use the same seat belt.**
- **Do not fold down the rear seats when occupants are in the rear seat area or any luggage is on the rear seats.**
  - **Make sure that the seat path is clear before moving the seat.**
  - **Be careful not to allow hands or feet to get caught or pinched in the seat.**
- **Head restraints/headrests should be adjusted properly as they may provide significant protection against injury in an accident. Always replace and adjust them properly if they have been removed for any reason.**
- **If the head restraints/headrests are removed for any reason, they should be securely stored to prevent them from causing injury to passengers or damage to the vehicle in case of sudden braking or an accident.**
- **When returning the seatbacks to the upright position, be certain they are completely secured in the latched position. If they are not completely secured, passengers may be injured in an accident or sudden stop.**
- **Properly secure all cargo to help prevent it from sliding or shifting. Do not place cargo higher than the seatbacks. In a sudden stop or collision, unsecured cargo could cause personal injury.**

Folding the rear bench seat up (if so equipped)

To fold the rear bench seat up:

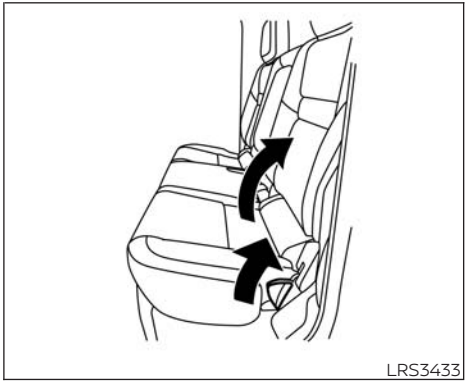

1. Lift up on the lever, located on the side of the seat, while lifting the front of the seat cushion up.

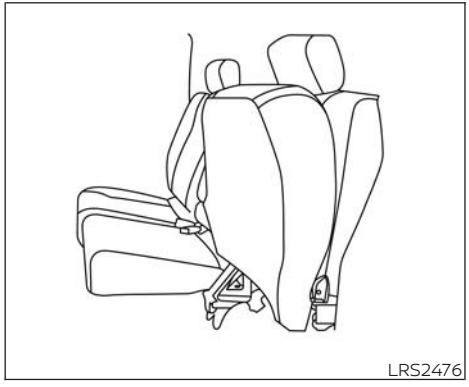
LRS2476

2. Fold the bottom of the seat cushion toward the back of the vehicle until it locks in place.

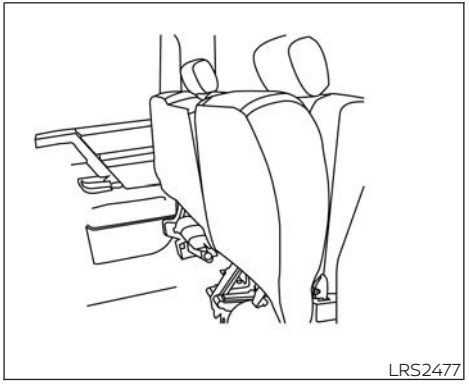
LRS2477

3. Repeat this process to raise and secure the seat cushion on the other side of the vehicle for maximum storage capacity.

To return the rear bench seat to a seating position, reverse the process. **Make sure to properly push the seat cushion down into place.**

⚠ WARNING

- **When the vehicle is being used to carry cargo, properly secure all cargo to help prevent it from sliding or shifting. Do not place cargo higher than the seatbacks. In a sudden stop or collision, unsecured cargo could cause personal injury.**
- **Do not allow people to ride in any area of your vehicle that is not equipped with seats and seat belts. Be sure everyone in your vehicle is in a seat and using a seat belt properly. Never ride in the rear seat unless the seat bottom cushions are in place and latched.**
- **When returning the seatbacks to the upright position, be certain they are completely secured in the latched position. If they are not completely secured, passengers may be injured in an accident or sudden stop.**

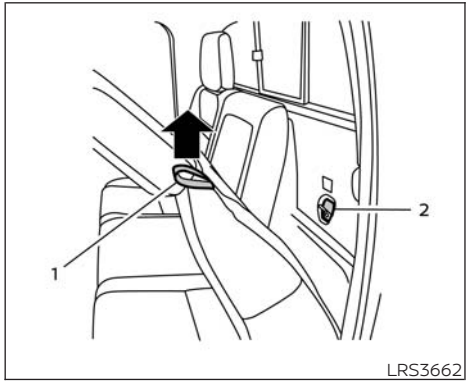

Folding the rear bench seat down (if so equipped)

1. Pull strap
2. Child restraint anchor points

The rear bench seatback can be tilted forward to access the child restraint anchor point locations or the jacking equipment.

To tilt the seatback forward, pull the pull strap up and tilt the seatback. The child restraint anchor points can be accessed behind the rear bench seatback. The jacking equipment can be accessed from behind the passenger's side seatback..

⚠WARNING

Never allow anyone to ride in the cargo area or on the rear seat when it is in the fold-down position. Use of these areas by passengers without proper restraints could result in serious injury or death in an accident or sudden stop.

BASIC INFORMATION

⚠WARNING

Head restraints/headrests supplement the other vehicle safety systems. They may provide additional protection against injury in certain rear end collisions. Adjustable head restraints/headrests must be adjusted properly, as specified in this section. Check the adjustment after someone else uses the seat. Do not attach anything to the head restraint/headrest stalks or remove the head restraint/headrest. Do not use the seat if the head restraint/headrest has been removed. If the head restraint/headrest was removed, reinstall and properly adjust the head restraint/headrest before an occupant uses the seating position. Failure to follow these instructions can reduce the effectiveness of the head restraints/headrests. This may increase the risk of serious injury or death in a collision.

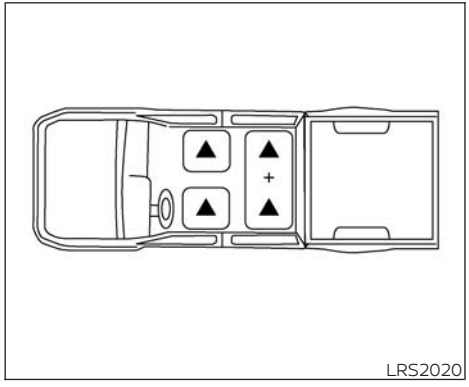

Crew Cab

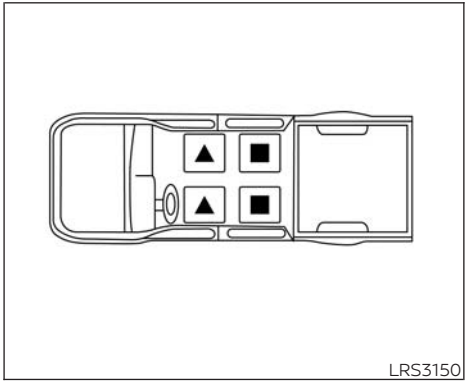

King Cab®

The illustration shows the seating positions equipped with head restraints/headrests.

▲ Indicates the seating position is equipped with a head restraint.

■ Indicates the seating position is equipped with a headrest.

+ Indicates the seating position is not equipped with a head restraint or headrest (if applicable).

- Your vehicle is equipped with a head restraint/headrest that may be integrated, adjustable or non-adjustable.
- Adjustable head restraints/headrests have multiple notches along the stalk(s) to lock them in a desired adjustment position.
- The non-adjustable head restraints/headrests have a single locking notch to secure them to the seat frame.
- Proper Adjustment:
  - For the adjustable type, align the head restraint/headrest so the center of your ear is approximately level with the center of the head restraint/headrest.
  - If your ear position is still higher than the recommended alignment, place the head restraint/headrest at the highest position.
- If the head restraint/headrest has been removed, ensure that it is reinstalled and locked in place before riding in that designated seating position.

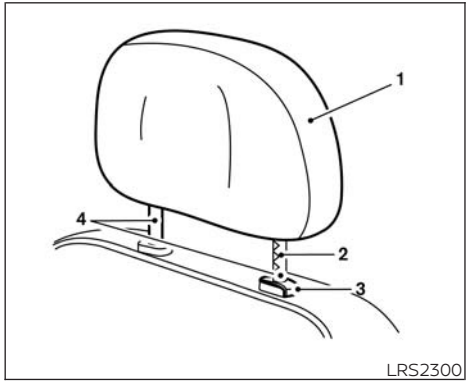

ADJUSTABLE HEAD RESTRAINT/ HEADREST COMPONENTS

1. Removable head restraint/headrest
2. Multiple notches
3. Lock knob
4. Stalks

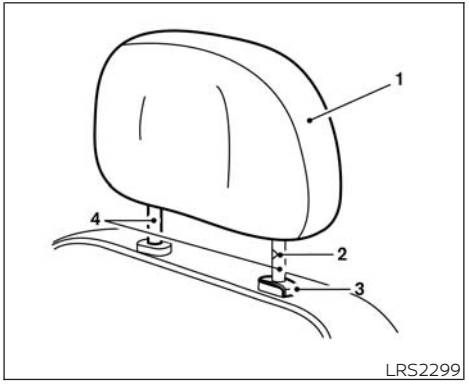

NON-ADJUSTABLE HEAD RESTRAINT/HEADREST COMPONENTS

1. Removable head restraint/headrest
2. Single notch
3. Lock knob
4. Stalks

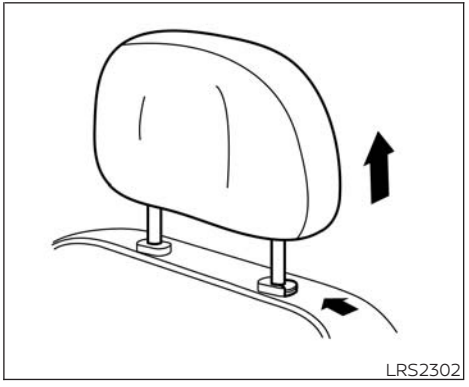

REMOVE

Use the following procedure to remove the head restraint/headrest:

1. Pull the head restraint/headrest up to the highest position.
2. Push and hold the lock knob.
3. Remove the head restraint/headrest from the seat.
4. Store the head restraint/headrest properly in a secure place so it is not loose in the vehicle.

5. Reinstall and properly adjust the head restraint/headrest before an occupant uses the seating position.

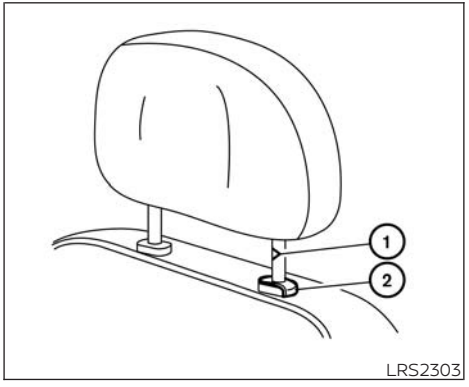

INSTALL

1. Align the head restraint/headrest stalks with the holes in the seat. Make sure that the head restraint/headrest is facing the correct direction. The stalk with the notch (notches) ① must be installed in the hole with the lock knob ②.
2. Push and hold the lock knob and push the head restraint/headrest down.
3. Properly adjust the head restraint/headrest before an occupant uses the seating position.

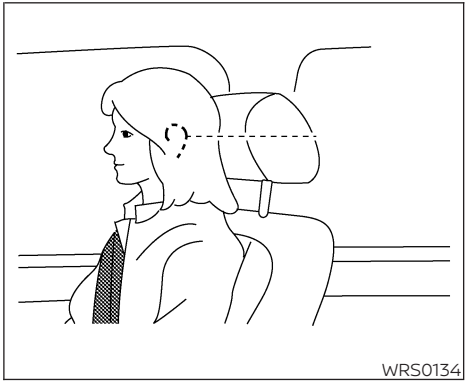

ADJUST

Basic Information

For adjustable head restraint/headrest

Adjust the head restraint/headrest so the center is level with the center of your ears. If your ear position is still higher than the recommended alignment, place the head restraint/headrest at the highest position.

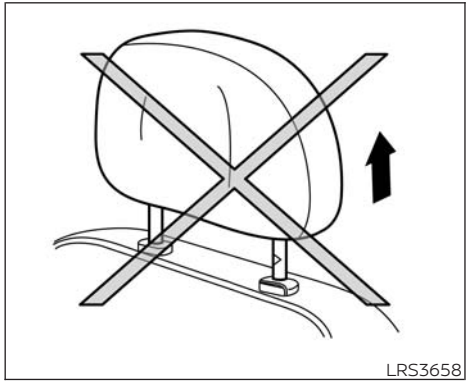

For non-adjustable head restraint/ headrest

Make sure the head restraint/headrest is positioned so the lock knob is engaged in the notch before riding in that designated seating position.

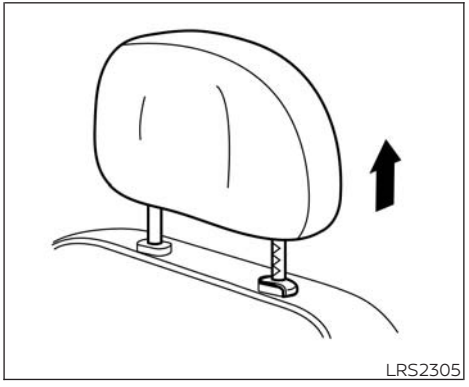

Raise

To raise the head restraint/headrest, pull it up.

Make sure the head restraint/headrest is positioned so the lock knob is engaged in the notch before riding in that designated seating position.

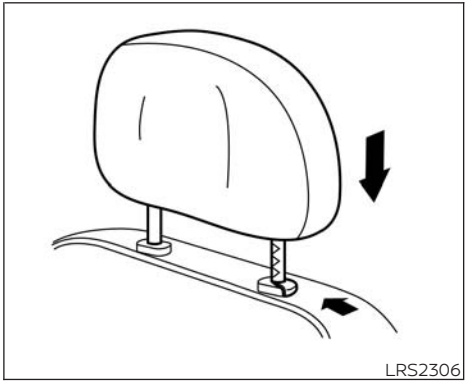

Lower

To lower, push and hold the lock knob and push the head restraint/headrest down.

Make sure the head restraint/headrest is positioned so the lock knob is engaged in the notch before riding in that designated seating position.

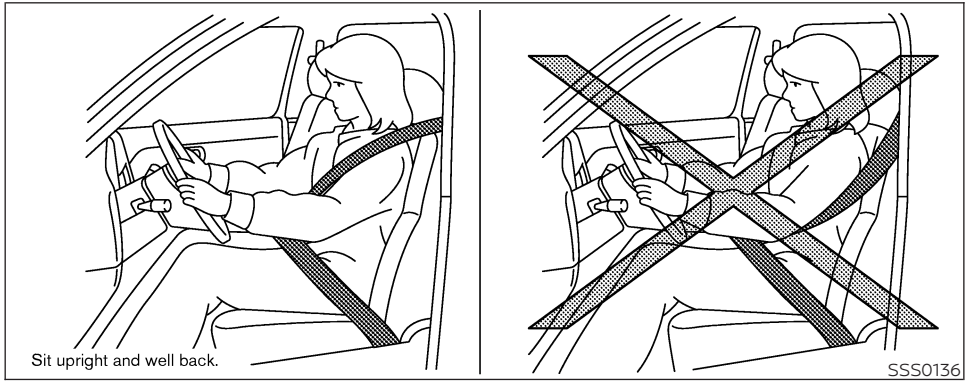

PRECAUTIONS ON SEAT BELT USAGE

If you are wearing your seat belt properly adjusted and you are sitting upright and well back in your seat with both feet on the floor, your chances of being injured or killed in a collision and/or the severity of injury may be greatly reduced. NISSAN strongly encourages you and all of your passengers to buckle up every time you drive, even if your seating position includes a supplemental air bag.

Most U.S. states and Canadian provinces or territories specify that seat belts be worn at all times when a vehicle is being driven.

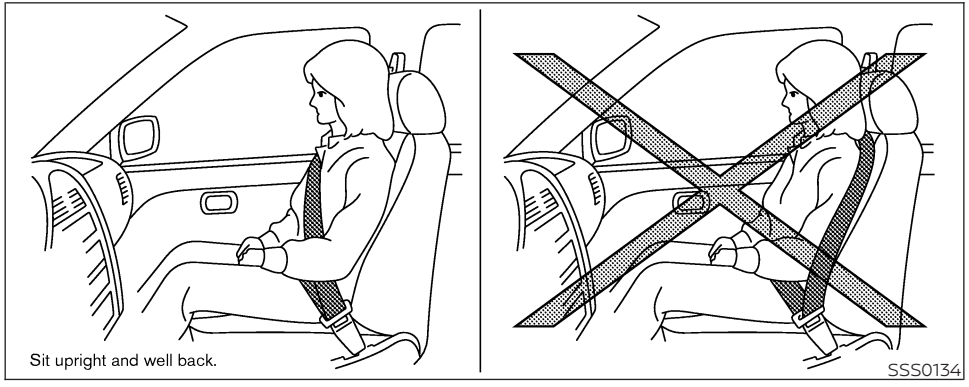

⚠ WARNING

- **Every person who drives or rides in this vehicle should use a seat belt at all times. Children should be in the rear seats and in an appropriate restraint.**

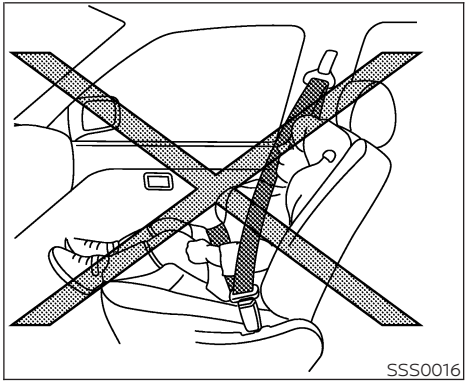

⚠ WARNING

- **The seat belt should be properly adjusted to a snug fit. Failure to do so may reduce the effectiveness of the entire restraint system and increase the chance or severity of injury in an accident. Serious injury or death can occur if the seat belt is not worn properly.**

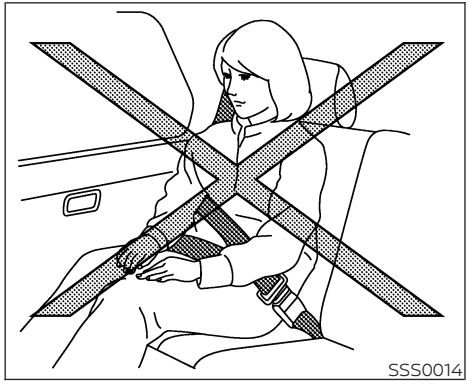

⚠ WARNING

- **Always route the shoulder belt over your shoulder and across your chest. Never put the belt behind your back, under your arm or across your neck. The belt should be away from your face and neck, but not falling off your shoulder.**
- **Position the lap belt as low and snug as possible AROUND THE HIPS, NOT THE WAIST. A lap belt worn too high could increase the risk of internal injuries in an accident.**
- **Be sure the seat belt tongue is securely fastened to the proper buckle.**
- **Do not wear the seat belt inside out or twisted. Doing so may reduce its effectiveness.**
- **Do not allow more than one person to use the same seat belt.**
- **Never carry more people in the vehicle than there are seat belts.**
- **If the seat belt warning light glows continuously or chime continues while the ignition is turned ON with all doors closed and all seat belts fastened, it may indicate a malfunction in the system. Have the system checked. It is recommended that you visit a NISSAN dealer for this service.**
- **No changes should be made to the seat belt system. For example, do not modify the seat belt, add material, or install devices that may change the seat belt routing or tension. Doing so may affect the operation of the seat belt system. Modifying or tampering with the seat belt system may result in serious personal injury.**
- **Once seat belt pretensioner(s) have activated, they cannot be reused and must be replaced together with the retractor. It is recommended that you visit a NISSAN dealer for this service.**
- **All seat belt assemblies, including retractors and attaching hardware, should be inspected after any collision. It is recommended that you visit a NISSAN dealer for this service. NISSAN recommends that all seat belt assemblies in use during a collision be replaced unless the collision was minor and the belts show no damage and continue to operate properly. Seat belt assemblies not in use during a collision should also be inspected and replaced if either damage or improper operation is noted.**
- **All child restraints and attaching hardware should be inspected after any collision. Always follow the restraint manufacturer's inspection instructions and replacement recommendations. The child restraints should be replaced if they are damaged.**

SEAT BELT WARNING LIGHT AND CHIME

The light and chime remind you to fasten the driver, front passenger and rear passenger seat belts. A visual and audible alert will operate in the following conditions:

- If the driver seat belt is not fastened.
- The front passenger's seat belt is not fastened and the seat is occupied by a passenger for 7 seconds after the ignition switch is placed in the ON position.
- The front passenger's seat belt is not fastened and objects or external force on the passenger seat change the seat belt reminder classification to "occupied".
- Any rear passenger seat belt is operated from fastened to unfastened.

For additional information, see:

- "Seat belt warning light and chime" (P. 117).
- "Rear seat belt warning" (P. 139).

The below situations could result in the seat belt warning function operating, even with no occupant present in the front passenger seat:

- Heavy objects placed on the seat.
- Someone pushing or pulling on the front passenger seat.
- An object placed under the front passenger seat.
- An object placed between the seat cushion and center console or between the seat cushion and the door.
- An object hanging on the seat or placed in the seatback pocket.
- A child restraint or other object pressing against the rear of the seatback.

The rear seat belt reminder may operate if the rear seat belts are used without occupants.

PREGNANT WOMEN

NISSAN recommends that pregnant women use seat belts. The seat belt should be worn snug and always position the lap belt as low as possible around the hips, not the waist. Place the shoulder belt over your shoulder and across your chest. Never run the lap/shoulder belt over your abdominal area. Contact your doctor for specific recommendations.

INJURED PERSONS

NISSAN recommends that injured persons use seat belts. Check with your doctor for specific recommendations.

THREE-POINT TYPE SEAT BELT WITH RETRACTOR

Basic Information

⚠ WARNING

- **Every person who drives or rides in this vehicle should use a seat belt at all times. Children should be in the rear seats and in an appropriate restraint.**
- **Do not ride in a moving vehicle when the seatback is reclined. This can be dangerous. The shoulder belt will not be against your body. In an accident, you could be thrown into it and receive neck or other serious injuries. You could also slide under the lap belt and receive serious internal injuries.**
- **For the most effective protection when the vehicle is in motion, the seat should be upright. Always sit well back and upright in the seat with both feet on the floor and adjust the seat belt properly.**
- **Do not allow children to play with the seat belts. Most seating positions are equipped with Automatic Locking Retractor (ALR) mode seat belts. If the seat belt becomes wrapped around a child's neck with the ALR mode activated, the child can be seriously injured or killed if the seat belt retracts and becomes tight. This can occur even if the vehicle is parked. Unbuckle the seat belt to release the child. If the seat belt cannot be unbuckled or is already unbuckled, release the child by cutting the seat belt with a suitable tool (such as a knife or scissors) to release the seat belt.**

Fastening the seat belts

1. Adjust the seat. For King Cab® models open the jump seat. For additional information, see "Seats" (P. 13).

2. Slowly pull the seat belt out of the retractor and insert the tongue into the buckle Ⓐ until you hear and feel the latch engage.
   - **The retractor is designed to lock during a sudden stop or on impact. A slow pulling motion permits the seat belt to move, and allows you some freedom of movement in the seat.**
   - **If the seat belt cannot be pulled from its fully retracted position, firmly pull the belt and release it. Then smoothly pull the belt out of the retractor.**

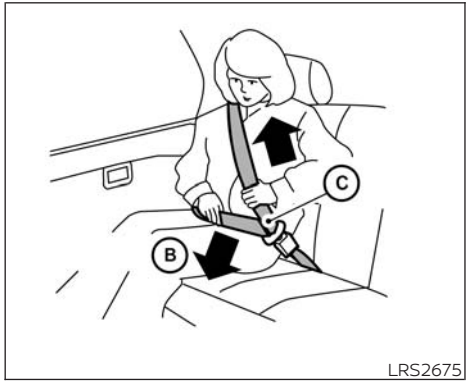

3. Position the lap belt portion **low and snug on the hips** Ⓑ as shown.
4. Pull the shoulder belt portion toward the retractor to take up extra slack Ⓒ. Be sure the shoulder belt is routed over your shoulder and across your chest.

The front passenger seat, rear seating positions' and jump seat position's three-point seat belts have two modes of operation:

- Emergency Locking Retractor (ELR)
- Automatic Locking Retractor (ALR)

The ELR mode allows the seat belt to extend and retract to allow the driver and passengers some freedom of movement in the seat. The ELR locks the seat belt when the vehicle slows down rapidly or during certain impacts.

The ALR mode (child restraint mode) locks the seat belt for child restraint installation.

When the ALR mode is activated, the seat belt cannot be extended again until the seat belt tongue is detached from the buckle and fully retracted. The seat belt returns to the ELR mode after the seat belt fully retracts. For additional information, see "Child restraints" (P. 35).

The ALR mode should be used only for child restraint installation. During normal seat belt use by an occupant, the ALR mode should not be activated. If it is activated it may cause uncomfortable seat belt tension. It can also change the operation of the front passenger air bag. For additional information, see "Front passenger air bag and status light" (P. 90).

⚠ WARNING

When fastening the seat belts, be certain that the seatbacks are completely secured in the latched position. If they are not completely secured, passengers may be injured in an accident or sudden stop.

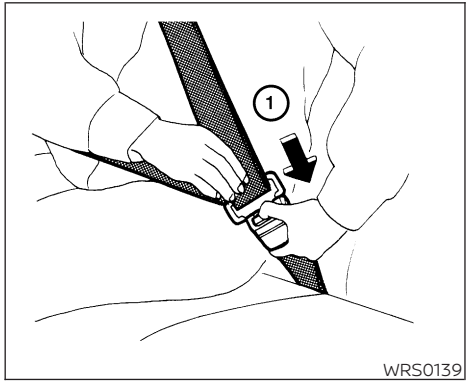

WRS0139

Unfastening the seat belts

To unfasten the seat belt, press the button on the buckle ①. The seat belt automatically retracts.

Checking seat belt operation

Seat belt retractors are designed to lock seat belt movement by two separate methods:

- When the seat belt is pulled quickly from the retractor
- When the vehicle slows down rapidly

To increase your confidence in the seat belts, check the operation as follows:

- Grasp the shoulder belt and pull forward quickly. The retractor should lock and restrict further belt movement.

If the retractor does not lock during this check, get the system checked. It is recommended that you visit a NISSAN dealer for this service or to learn more about seat belt operation.

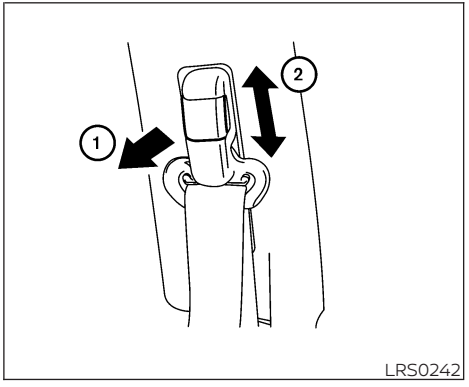

LRS0242

Shoulder belt height adjustment (front seats)

The shoulder belt anchor height should be adjusted to the position best for you. For additional information, see "Precautions on seat belt usage" (P. 25). To adjust, pull out the adjustment button ① and move the shoulder belt anchor to the desired position ②, so the belt passes over the center of the shoulder. The belt should be away from your face and neck, but not falling off your shoulder. Release the adjustment button to lock the shoulder belt anchor into position.

⚠ WARNING

- **After adjustment, release the adjustment button and try to move the shoulder belt anchor up and down to make sure it is securely fixed in position.**
- **The shoulder belt anchor height should be adjusted to the position best for you. Failure to do so may reduce the effectiveness of the entire restraint system and increase the chance or severity of injury in an accident.**

SEAT BELT EXTENDERS

If, because of body size or driving position, it is not possible to properly fit the lap/shoulder belt and fasten it, an extender that is compatible with the installed seat belts is available for purchase. The extender adds approximately 8 in (200 mm) of length and may be used for either the driver or front passenger seating position. It is recommended that you visit a NISSAN dealer for assistance with purchasing an extender if an extender is required.

⚠ WARNING

- **Only NISSAN seat belt extenders, made by the same company which made the original equipment seat belts, should be used with NISSAN seat belts.**
- **Adults and children who can use the standard seat belt should not use an extender. Such unnecessary use could result in serious personal injury in the event of an accident.**
- **Never use seat belt extenders to install child restraints. If the child restraint is not secured properly, the child could be seriously injured or killed in a collision or a sudden stop.**

SEAT BELT MAINTENANCE

- **To clean the seat belt webbing,** apply a mild soap solution or any solution recommended for cleaning upholstery or carpet. Then wipe with a cloth and allow the seat belts to dry in the shade. Do not allow the seat belts to retract until they are completely dry.
- **If dirt builds up in the shoulder belt guide of the seat belt anchors,** the seat belts may retract slowly. Wipe the shoulder belt guide with a clean, dry cloth.
- **Periodically check to see that the seat belt and the metal components,** such as buckles, tongues, retractors, flexible wires and anchors, work properly. If loose parts, deterioration, cuts or other damage on the webbing is found, the entire seat belt assembly should be replaced.

BASIC INFORMATION

⚠ WARNING

Do not allow children to play with the seat belts. Most seating positions are equipped with Automatic Locking Retractor (ALR) mode seat belts. If the seat belt becomes wrapped around a child's neck with the ALR mode activated, the child can be seriously injured or killed if the seat belt retracts and becomes tight. This can occur even if the vehicle is parked. Unbuckle the seat belt to release the child. If the seat belt cannot be unbuckled or is already unbuckled, release the child by cutting the seat belt with a suitable tool (such as a knife or scissors) to release the seat belt.

Children need adults to help protect them. They need to be properly restrained.

In addition to the general information in this manual, child safety information is available from many other sources, including doctors, teachers, government traffic safety offices, and community organizations. Every child is different, so be sure to learn the best way to transport your child.

There are three basic types of child restraint systems:

- Rear-facing child restraint
- Forward-facing child restraint
- Booster seat

The proper restraint depends on the child's size. Generally, infants up to about 1 year and less than 20 lbs. (9 kg) should be placed in rear-facing child restraints. Forward-facing child restraints are available for children who outgrow rear-facing child restraints and are at least 1 year old. Booster seats are used to help position a vehicle lap/shoulder belt on a child who can no longer use a forward-facing child restraint.

⚠ WARNING

Infants and children need special protection. The vehicle's seat belts may not fit them properly. The shoulder belt may come too close to the face or neck. The lap belt may not fit over their small hip bones. In an accident, an improperly fitting seat belt could cause serious or fatal injury. Always use appropriate child restraints.

All U.S. states and Canadian provinces or territories require the use of approved child restraints for infants and small children. For additional information, see "Child restraints" (P. 35).

A child restraint may be secured in the vehicle by using either the LATCH (Lower Anchors and Tethers for CHildren) system or with the vehicle seat belt. For additional information, see "Child restraints" (P. 35).

NISSAN recommends that all pre-teens and children be restrained in the rear seat if available (Crew Cab models). Studies show that children are safer when properly restrained in the rear seat than in the front seat.

This is especially important because your vehicle has a supplemental restraint system (air bag system) for the front passenger. For additional information, see "Supplemental Restraint System (SRS)" (P. 79).

INFANTS

Infants up to at least 1 year old should be placed in a rear-facing child restraint. NISSAN recommends that infants be placed in child restraints that comply with Federal Motor Vehicle Safety Standards or Canadian Motor Vehicle Safety Standards. You should choose a child restraint that fits your vehicle and always follow the manufacturer's instructions for installation and use.

SMALL CHILDREN

Children that are over 1 year old and weigh at least 20 lbs. (9 kg) should remain in a rear-facing child restraint as long as possible up to the height or weight limit of the child restraint. Children who outgrow the height or weight limit of the rear-facing child restraint and are at least 1 year old should be secured in a forward-facing child restraint with a harness. Refer to the manufacturer's instructions for minimum and maximum weight and height recommendations. NISSAN recommends that small children be placed in child restraints that comply with Federal Motor Vehicle Safety Standards or Canadian Motor Vehicle Safety Standards. You should choose a child restraint that fits your vehicle and always follow the manufacturer's instructions for installation and use.

LARGER CHILDREN

Children should remain in a forward-facing child restraint with a harness until they reach the maximum height or weight limit allowed by the child restraint manufacturer.

Once a child outgrows the height or weight limit of the harness-equipped forward-facing child restraint, NISSAN recommends that the child be placed in a commercially available booster seat to obtain proper seat belt fit. For a seat belt to fit properly, the booster seat should raise the child so that the shoulder belt is properly positioned across the chest and the top, middle portion of the shoulder. The shoulder belt should not cross the neck or face and should not fall off the shoulder. The lap belt should lie snugly across the lower hips or upper thighs, not the abdomen.

A booster seat can only be used in seating positions that have a three-point type seat belt. The booster seat should fit the vehicle seat and have a label certifying that it complies with Federal Motor Vehicle Safety Standards or Canadian Motor Vehicle Safety Standards. Once the child has grown so the shoulder belt is no longer on or near the face and neck and the lap belt can be positioned properly across the lower hips or upper thighs, use the seat belt without the booster seat.

A booster seat should be used until the child can pass the seat belt fit test below:

- Are the child's back and hips against the vehicle seatback?
- Is the child able to sit without slouching?
- Do the child's knees bend easily over the front edge of the seat with feet flat on the floor?
- Can the child safely wear the seat belt (lap belt low and snug across the hips and shoulder belt across mid-chest and shoulder)?
- Is the child able to use the properly adjusted head restraint/headrest?
- Will the child be able to stay in position for the entire ride?

LRS2690

If you answered no to any of these questions, the child should remain in a booster seat using a three-point type seat belt.

NOTE:

Laws in some communities may follow different guidelines. Check local and state regulations to confirm your child is using the correct restraint system before traveling.

⚠WARNING

Never let a child stand or kneel on any seat and do not allow a child in the cargo area. The child could be seriously injured or killed in a sudden stop or collision.

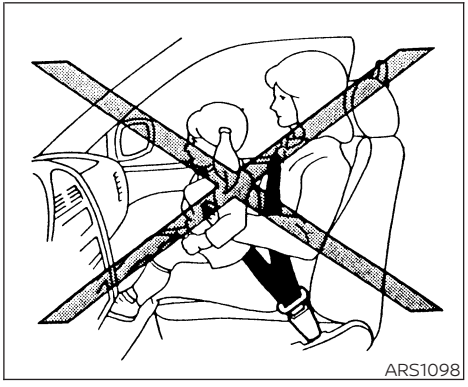
ARS1098

PRECAUTIONS ON CHILD RESTRAINTS

⚠WARNING

- **Failure to follow the warnings and instructions for proper use and installation of child restraints could result in serious injury or death of a child or other passengers in a sudden stop or collision:**
  - **Do not install rear-facing child restraints in the driver's side rear seating position.**

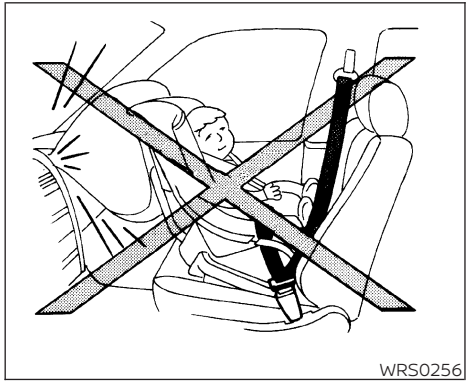

- For forward-facing child seats and boosters, DO NOT install if the child restraint base extends past the forward edge of the seat cushion.
- The child restraint must be used and installed properly. Always follow all of the child restraint manufacturer's instructions for installation and use.
- Infants and children should never be held on anyone's lap. Even the strongest adult cannot resist the forces of a collision.
- Do not put a seat belt around both a child and another passenger.
- NISSAN recommends that all child restraints be installed in the rear seat. Studies show that children are safer when properly restrained in the rear seat than in the front seat. If you must install a forward-facing child restraint in the front seat, see "Forward-facing child restraint installation using the seat belts - front passenger and rear bench seat (Crew Cab models)" (P. 62) or "Forward-facing child restraint installation using the seat belts - front passenger and jump seats (King Cab® models) (P. 67).
- Even with the NISSAN Advanced Air Bag System, never install a rear-facing child restraint in the front seat. An inflating air bag could seriously injure or kill a child. A rear-facing child restraint must only be used in the rear seat.
- Be sure to purchase a child restraint that will fit the child and vehicle. Some child restraints may not fit properly in your vehicle.
- Child restraint anchorages are designed to withstand only those loads imposed by correctly fitted child restraints. Under no circumstances are they to be used to attach adult seat belts, or other items or equipment to the vehicle. Doing so could damage the child restraint anchorages. The child restraint will not be properly installed using the damaged anchorage, and a child could be seriously injured or killed in a collision.
- Never use the anchor points for adult seat belts, or other items.
- A child restraint with a top tether strap should not be used in the front passenger seat (King Cab® models).
- Keep seatbacks as upright as possible after fitting the child restraint.
- Infants and children should always be placed in an appropriate child restraint while in the vehicle.

- **When the child restraint is not in use, keep it secured with the LATCH system or a seat belt. In a sudden stop or collision, loose objects can injure occupants or damage the vehicle.**

⚠CAUTION

A child restraint in a closed vehicle can become very hot. Check the seating surface and buckles before placing a child in the child restraint.

This vehicle is equipped with a universal child restraint anchor system, referred to as the LATCH (Lower Anchors and Tethers for CHildren) system. Some child restraints include rigid or webbing-mounted attachments that can be connected to these anchors. For additional information, see "LATCH (Lower Anchors and Tethers for CHildren) system" (P. 38).

If you do not have a LATCH compatible child restraint, the vehicle seat belts can be used.

Several manufacturers offer child restraints for infants and children of various sizes. When selecting any child restraint, keep the following points in mind:

- Choose only a restraint with a label certifying that it complies with Federal Motor Vehicle Safety Standard 213 or Canadian Motor Vehicle Safety Standard 213.
- Check the child restraint in your vehicle to be sure it is compatible with the vehicle's seat and seat belt system.
- If the child restraint is compatible with your vehicle, place your child in the child restraint and check the various adjustments to be sure the child restraint is compatible with your child. Choose a child restraint that is designed for your child's height and weight. Always follow all recommended procedures.
- If the combined weight of the child and child restraint is less than 65 lbs. (29.5 kg), you may use either the LATCH anchors or the seat belt to install the child restraint (not both at the same time).
- If the combined weight of the child and child restraint is greater than 65 lbs. (29.5 kg), use the vehicle's seat belt (not the lower anchors) to install the child restraint.
- Be sure to follow the child restraint manufacturer's instructions for installation.

All U.S. states and Canadian provinces or territories require that infants and small children be restrained in an approved child restraint at all times while the vehicle is being operated. Canadian law requires the top tether strap on forward-facing child restraints be secured to the designated anchor point on the vehicle.

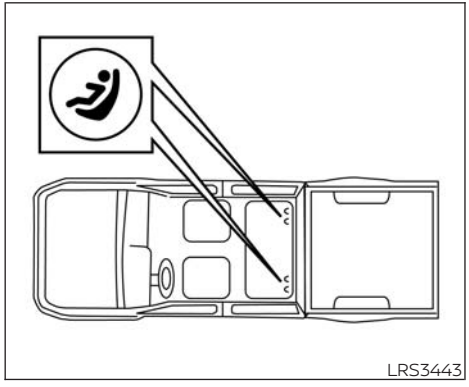

LATCH system lower anchor locations (Crew Cab models)

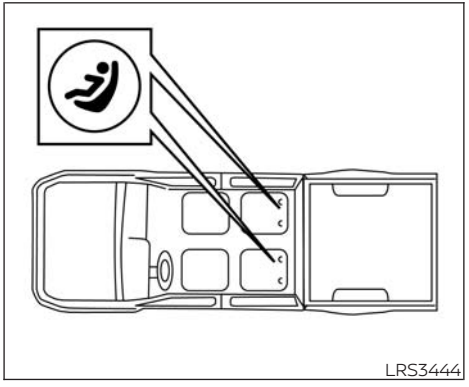

LATCH system lower anchor locations (King Cab® models)

LATCH (Lower Anchors and Tethers for CHildren) SYSTEM

Basic Information

Your vehicle is equipped with special anchor points that are used with LATCH system compatible child restraints. This system may also be referred to as the ISOFIX or ISOFIX compatible system. With this system, you do not have to use a vehicle seat belt to secure the child restraint unless the combined weight of the child and child restraint exceeds 65 lbs. (29.5 kg). If the combined weight of the child and child restraint is greater than 65 lbs. (29.5 kg) use the vehicle's seat belt (not the lower anchors) to install the child restraint. Be sure to follow the child restraint manufacturer's instructions for installation.

The LATCH lower anchor points are provided to install child restraints in the rear outboard seating positions only. Do not attempt to install a child restraint in the center position using the LATCH lower anchors.

LATCH lower anchor

⚠ WARNING

Failure to follow the warnings and instructions for proper use and installation of child restraints could result in serious injury or death of a child or other passengers in a sudden stop or collision:

- **Attach LATCH system compatible child restraints only at the locations shown in the illustration.**
- **Do not secure a child restraint in the center rear seating position using the LATCH lower anchors. The child restraint will not be secured properly.**
- **Inspect the lower anchors by inserting your fingers into the lower anchor area. Feel to make sure there are no obstructions over the anchors such as seat belt webbing or seat cushion material. The child restraint will not be secured properly if the lower anchors are obstructed.**

Child restraint anchorages are designed to withstand only those loads imposed by correctly fitted child restraints. Under no circumstances are they to be used to attach adult seat belts, or other items or equipment to the vehicle. Doing so could damage the child restraint anchorages. The child restraint will not be properly installed using the damaged anchorage, and a child could be seriously injured or killed in a collision.

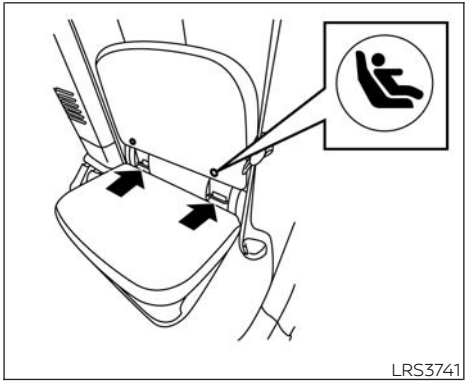

LATCH locations (King Cab® models)

LATCH locations (Crew Cab models)

LATCH lower anchor location

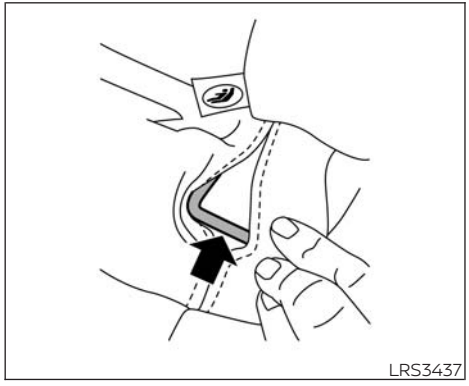

LATCH locations (Crew Cab models)

The LATCH lower anchors are located as shown. A label is attached to the seatback to help you locate the LATCH lower anchors.

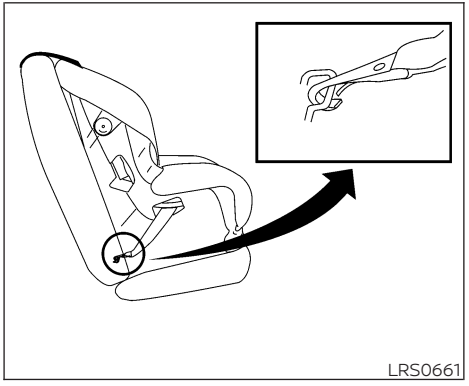

LATCH webbing-mounted attachment

Installing child restraint LATCH lower anchor attachments

LATCH compatible child restraints include two rigid or webbing-mounted attachments that can be connected to two anchors located at certain seating positions in your vehicle. With this system, you do not have to use a vehicle seat belt to secure the child restraint. Check your child restraint for a label stating that it is compatible with LATCH. This information may also be in the instructions provided by the child restraint manufacturer.

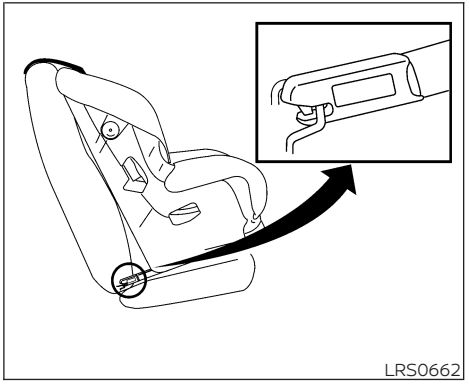

LATCH rigid-mounted attachment

When installing a child restraint, carefully read and follow the instructions in this manual and those supplied with the child restraint.

Top tether anchor

⚠ WARNING

- **Do not allow cargo to contact the top tether strap when it is attached to the top tether anchor. Properly secure the cargo so it does not contact the top tether strap. Cargo that is not properly secured or cargo that contacts the top tether strap may damage it during a collision. A child could be seriously injured or killed in a collision if the top tether strap is damaged.**
- **Child restraint anchorages are designed to withstand only those loads imposed by correctly fitted child restraints. Under no circumstances are they to be used for adult seat belts, harnesses, or for attaching other items or equipment to the vehicle. Doing so could damage the child restraint anchorages. The child restraint will not be properly installed using the damaged anchorages, and a child could be seriously injured or killed in a collision.**

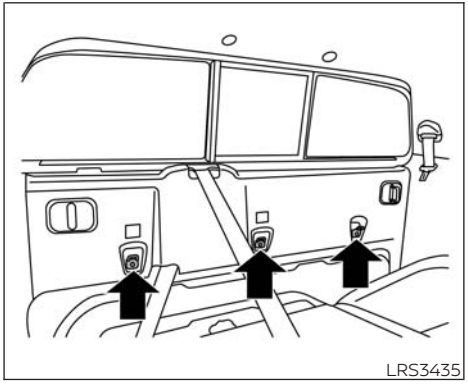

Rear bench seat (Crew Cab models)

Top tether anchor point locations

Anchor points are located under the rear window behind the rear bench seat (Crew Cab models) as shown

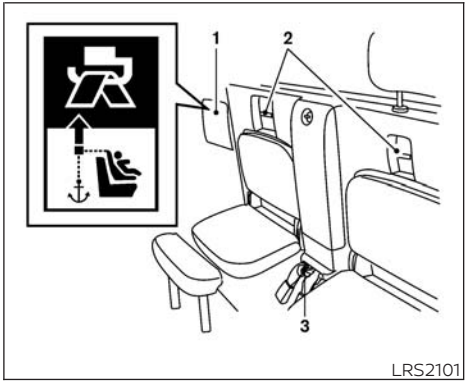

Jump seats (King Cab® models - passenger side shown)

1. Cover plate
2. Routing bracket
3. Anchor point

- On the floor between the jump seat belt buckles in the center of the vehicle (King Cab® models) as shown.

The anchor point is located on the floor between the jump seat belt buckles in the center of the vehicle. The routing bracket is located behind the cover plate under the rear window above the jump seat.

REAR-FACING CHILD RESTRAINT INSTALLATION USING LATCH (Crew Cab models)

For additional information, see "Child safety" (P. 33) and "Child restraints" (P. 35) for all Warnings and Cautions before installing a child restraint.

Do not use the lower anchors if the combined weight of the child and the child restraint exceeds 65 lbs. (29.5 kg). If the combined weight of the child and the child restraint is greater than 65 lbs. (29.5 kg) use the vehicle's seat belt (not the lower anchors) to install the child restraint. Be sure to follow the child restraint manufacturer's instructions for installation.

Follow these steps to install a rear-facing child restraint in the rear seats using the LATCH system:

1. Position the child restraint on the seat. Always follow the child restraint manufacturer's instructions.

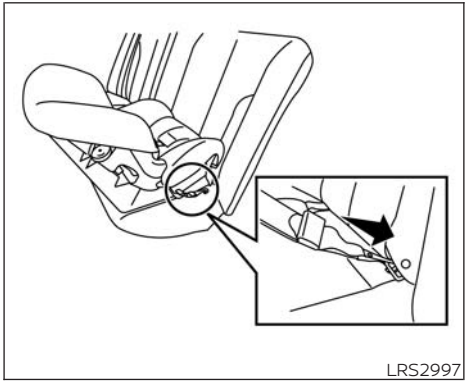

Rear-facing webbing-mounted – step 2

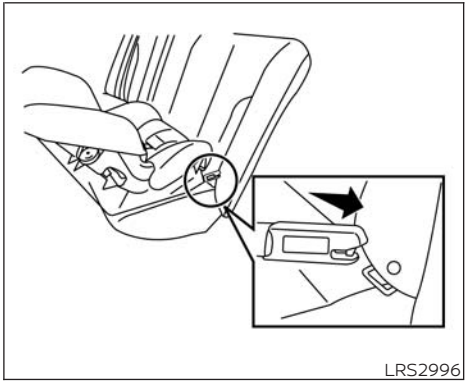

Rear-facing rigid-mounted – step 2

2. Secure the child restraint anchor attachments to the LATCH lower anchors. Check to make sure the LATCH attachment is properly attached to the lower anchors.

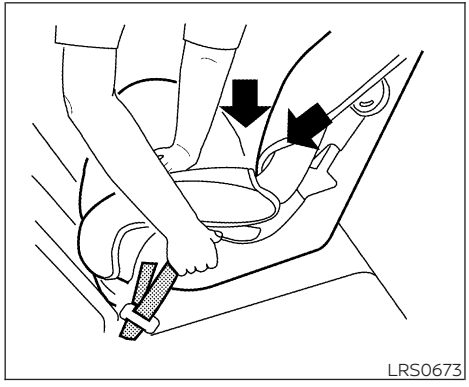

Rear-facing – step 3

3. For child restraints that are equipped with webbing-mounted attachments, remove any additional slack from the anchor attachments. Press downward and rearward firmly in the center of the child restraint with your hand to compress the vehicle seat cushion and seatback while tightening the webbing of the anchor attachments.

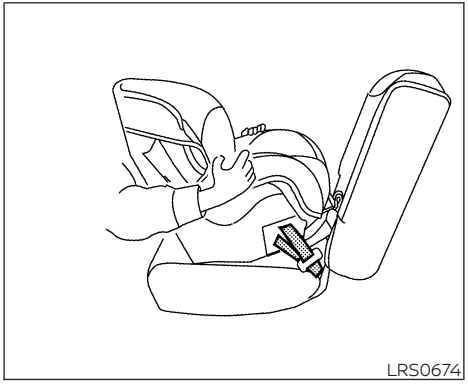

Rear-facing – step 4

4. After attaching the child restraint, test it before you place the child in it. Push it from side to side while holding the child restraint near the LATCH attachment path. The child restraint should not move more than 1 inch (25 mm), from side to side. Try to tug it forward and check to see if the LATCH attachment holds the restraint in place. If the restraint is not secure, tighten the LATCH attachment as necessary, or put the restraint in another seat and test it again. You may need to try a different child restraint or try installing by using the vehicle seat belt (if applicable). Not all child restraints fit in all types of vehicles.
5. Check to make sure the child restraint is properly secured prior to each use. If the child restraint is loose, repeat steps 2 through 4.

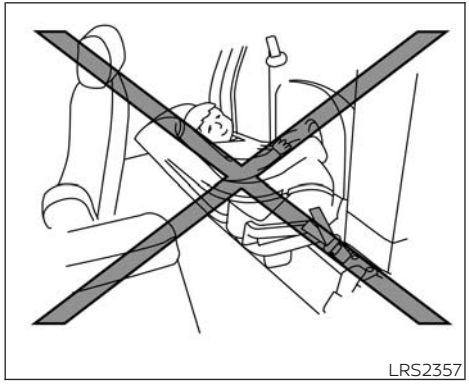

REAR-FACING CHILD RESTRAINT INSTALLATION USING LATCH — JUMP SEAT (King Cab® models)

⚠ WARNING

- **If a child restraint system is not installed properly, the child could be seriously injured or killed in a sudden stop or collision.**
  - **Never install a rear-facing child restraint system on the driver's side jump seat.**
  - **Do not install a child restraint system on the passenger's side jump seat without unfolding the seat extender.**

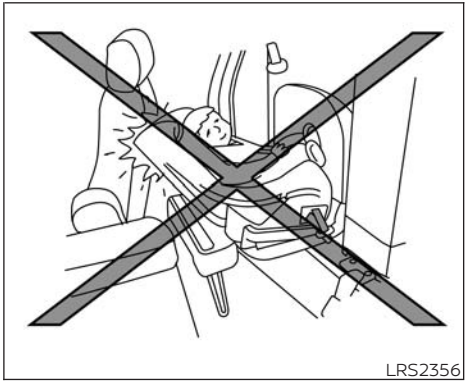

⚠ WARNING

- **To install a rear-facing child restraint on the passenger's side jump seat, it will be necessary to move the front passenger's seat fully forward and place the front seatback upright or tilt it forward. Failure to do so may cause the child restraint to not be installed properly and cause serious injury or death in a sudden stop or collision.**

- **The front seat cannot be used when a rear-facing child restraint is installed on the jump seat. Attempting to do so could cause serious injury in a sudden stop or collision.**

For additional information, see "Child safety" (P. 33) and "Child restraints" (P. 35) for all Warnings and Cautions before installing a child restraint.

Do not use the lower anchors if the combined weight of the child and the child restraint exceeds 65 lbs. (29.5 kg). If the combined weight of the child and the child restraint is greater than 65 lbs. (29.5 kg) use the vehicle's seat belt (not the lower anchors) to install the child restraint. Be sure to follow the child restraint manufacturer's instructions for installation.

Follow these steps to install a child restraint on the jump seat.

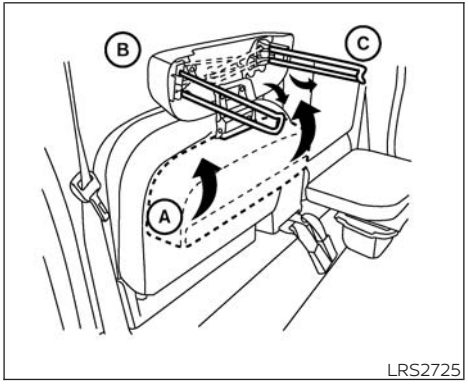

1. To access the jump seat extension (passenger's side only) Ⓐ on the jump seat, pull up Ⓑ on the extension to unfold it to the open position. Then unfold the two support legs Ⓒ and lower the jump seat to the full open seating position.

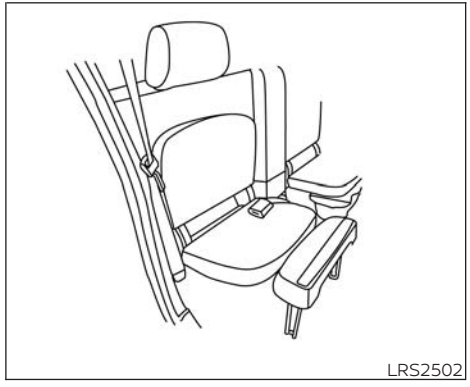

Full open seating position

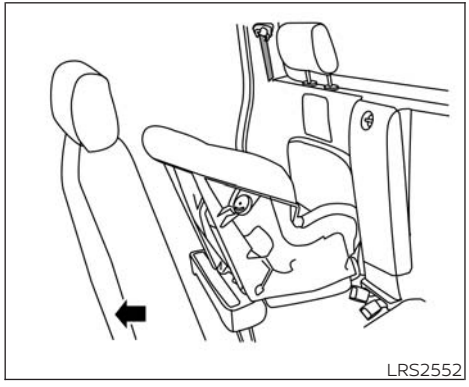

Rear-facing — step 2

2. Move the front passenger's seat into the full forward position. Then move the front seatback to the upright or tilted forward position. Position the child restraint on the jump seat. The direction of the child restraint depends on the type of the child restraint and the size of the child. Always follow the child restraint manufacturer's instructions.
3. Position the child restraint on the seat. Always follow the child restraint manufacturer's instructions.

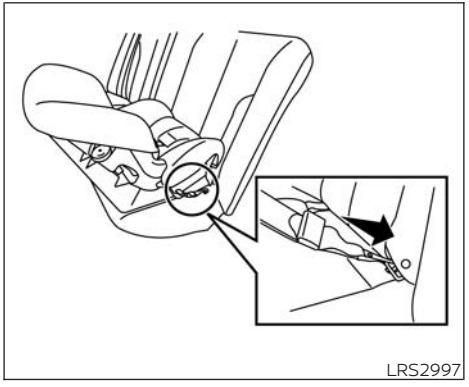

Rear-facing webbing-mounted – step 4

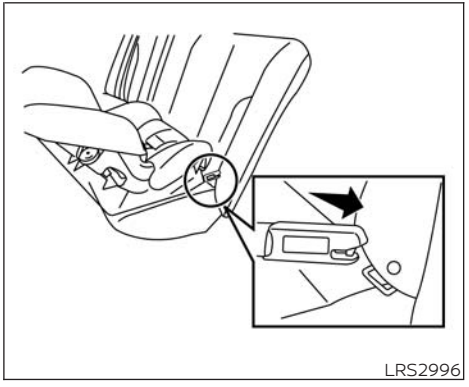

Rear-facing rigid-mounted – step 4

4. Secure the child restraint anchor attachments to the LATCH lower anchors. Check to make sure the LATCH attachment is properly attached to the lower anchors.

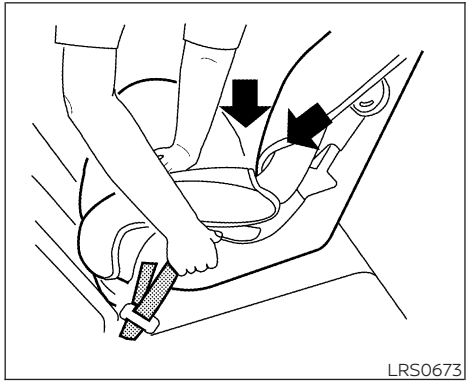

Rear-facing – step 5

5. For child restraints that are equipped with webbing-mounted attachments, remove any additional slack from the anchor attachments. Press downward and rearward firmly in the center of the child restraint with your hand to compress the vehicle seat cushion and seatback while tightening the webbing of the anchor attachments.

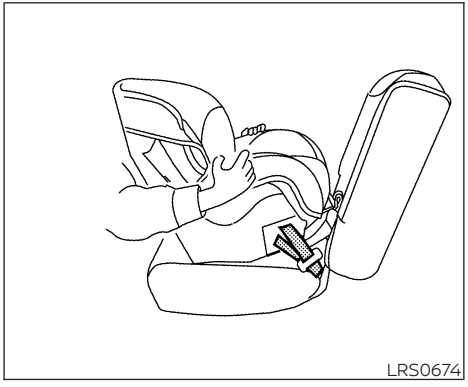

Rear-facing – step 6

6. After attaching the child restraint, test it before you place the child in it. Push it from side to side while holding the child restraint near the LATCH attachment path. The child restraint should not move more than 1 inch (25 mm), from side to side. Try to tug it forward and check to see if the LATCH attachment holds the restraint in place. If the restraint is not secure, tighten the LATCH attachment as necessary, or put the restraint in another seat and test it again. You may need to try a different child restraint or try installing by using the vehicle seat belt (if applicable). Not all child restraints fit in all types of vehicles.
7. Check to make sure the child restraint is properly secured prior to each use. If the child restraint is loose, repeat steps 1 through 6.

REAR-FACING CHILD RESTRAINT INSTALLATION USING THE SEAT BELTS (Crew Cab models)

⚠ WARNING

The three-point seat belt with Automatic Locking Retractor (ALR) must be used when installing a child restraint. Failure to use the ALR mode will result in the child restraint not being properly secured. The restraint could tip over or be loose and cause injury or death to a child in a sudden stop or collision. Also, it can change the operation of the front passenger air bag. For additional information, see "Front passenger air bag and status light" (P. 90).

For additional information, see "Child safety" (P. 33) and "Child restraints" (P. 35) for all Warnings and Cautions before installing a child restraint.

Do not use the lower anchors if the combined weight of the child and the child restraint exceeds 65 lbs. (29.5 kg). If the combined weight of the child and the child restraint is greater than 65 lbs. (29.5 kg), use the vehicle's seat belt (not the lower anchors) to install the child restraint. Be sure to follow the child restraint manufacturer's instructions for installation.

Follow these steps to install a rear-facing child restraint using the vehicle seat belts in the rear seats:

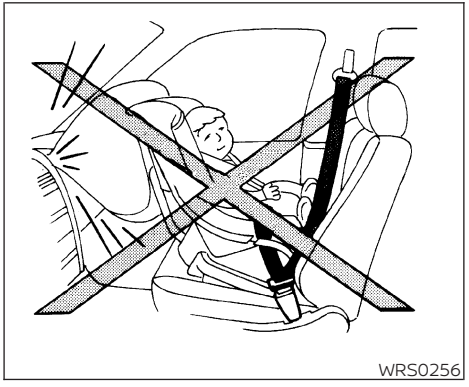

Rear-facing – step 1

1. **Child restraints for infants must be used in the rear-facing direction and therefore must not be used in the front seat.** Position the child restraint on the seat. Always follow the child restraint manufacturer's instructions.

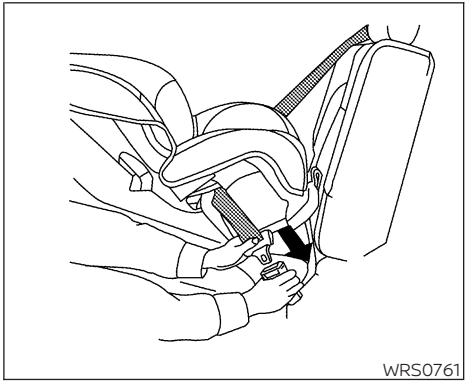

Rear-facing – step 2

2. Route the seat belt tongue through the child restraint and insert it into the buckle until you hear and feel the latch engage. Be sure to follow the child restraint manufacturer's instructions for belt routing.

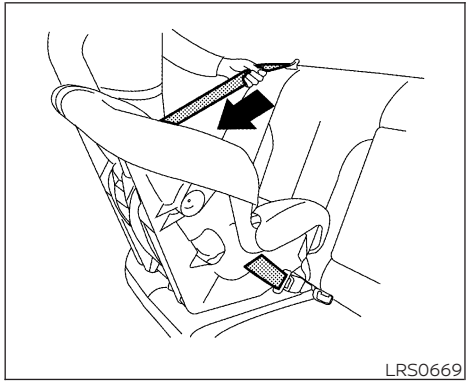

Rear-facing – step 3

3. Pull the shoulder belt until the belt is fully extended. At this time, the seat belt retractor is in the ALR mode (child restraint mode). It reverts to the ELR mode when the seat belt is fully retracted.

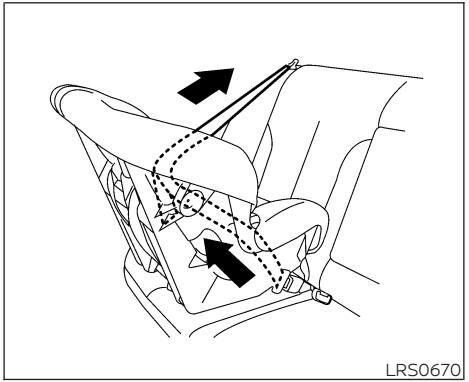

Rear-facing – step 4

4. Allow the seat belt to retract. Pull up on the shoulder belt to remove any slack in the belt.

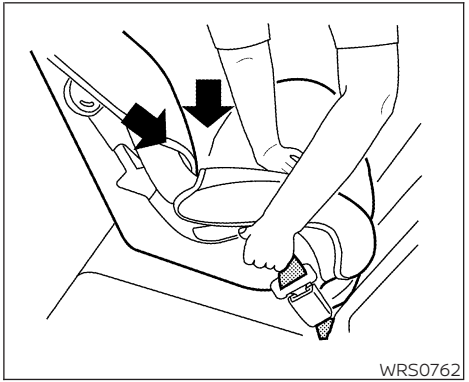

Rear-facing – step 5

5. Remove any additional slack from the seat belt; press downward and rearward firmly in the center of the child restraint to compress the vehicle seat cushion and seatback while pulling up on the seat belt.

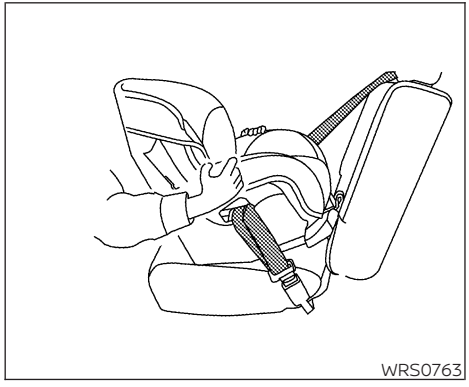

Rear-facing – step 6

6. After attaching the child restraint, test it before you place the child in it. Push it from side to side while holding the child restraint near the seat belt path. The child restraint should not move more than 1 inch (25 mm), from side to side. Try to tug it forward and check to see if the belt holds the restraint in place. If the restraint is not secure, tighten the seat belt as necessary, or put the restraint in another seat and test it again. You may need to try a different child restraint. Not all child restraints fit in all types of vehicles.
7. Check to make sure that the child restraint is properly secured prior to each use. If the seat belt is not locked, repeat steps 3 through 6.

After the child restraint is removed and the seat belt fully retracted, the ALR mode (child restraint mode) is canceled.

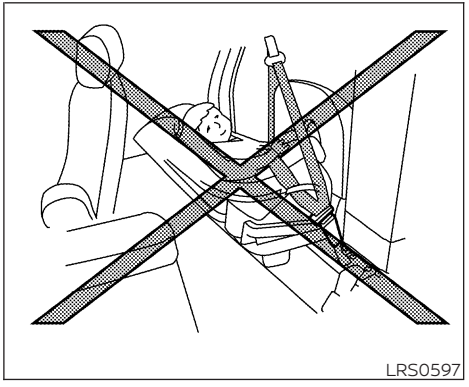

REAR-FACING CHILD RESTRAINT INSTALLATION USING THE SEAT BELTS — JUMP SEAT (King Cab® models)

⚠ WARNING

- **The three-point seat belt with Automatic Locking Retractor (ALR) must be used when installing a child restraint. Failure to use the ALR mode will result in the child restraint not being properly secured. The restraint could tip over or be loose and cause injury to a child in a sudden stop or**

collision. Also, it can change the operation of the front passenger air bag. For additional information, see "Front passenger air bag and status light" (P. 90).

- **A child restraint system will not be installed properly and the child could be seriously injured or killed in a sudden stop or collision.**
  - **Never install a rear-facing child restraint system on the driver's side jump seat.**
  - **Do not install a child restraint system on the passenger's side jump seat without unfolding the seat extender.**

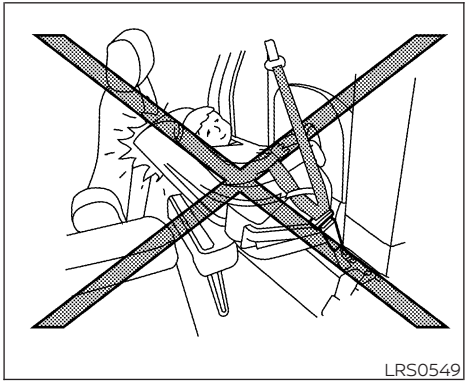

⚠WARNING

- **To install a rear-facing child restraint on the passenger's side jump seat, it will be necessary to move the front passenger's seat fully forward and place the front seatback upright or tilt it forward. Failure to do so may cause the child restraint to not be installed properly and cause serious injury or death in a sudden stop or collision.**
  - **The front seat cannot be used when a rear-facing child restraint is installed on the jump seat. Attempting to do so could cause serious injury in a sudden stop or collision.**

For additional information, see "Child safety" (P. 33) and "Child restraints" (P. 35) for all Warnings and Cautions before installing a child restraint.

Do not use the lower anchors if the combined weight of the child and the child restraint exceeds 65 lbs. (29.5 kg). If the combined weight of the child and the child restraint is greater than 65 lbs. (29.5 kg), use the vehicle's seat belt (not the lower anchors) to install the child restraint. Be sure to follow the child restraint manufacturer's instructions for installation.

Follow these steps to install a child restraint on the passenger's side jump seat.

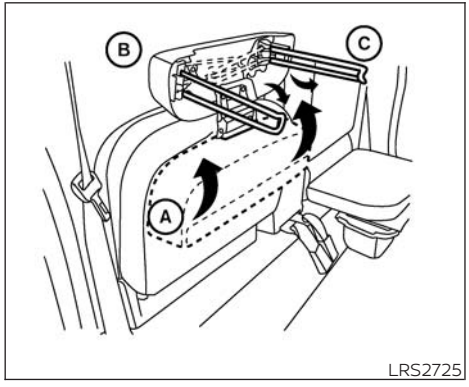

1. To access the jump seat extension Ⓐ on the passenger's side jump seat, pull up Ⓑ on the extension to unfold it to the open position. Then unfold the two support legs Ⓒ and lower the jump seat to the full open seating position.

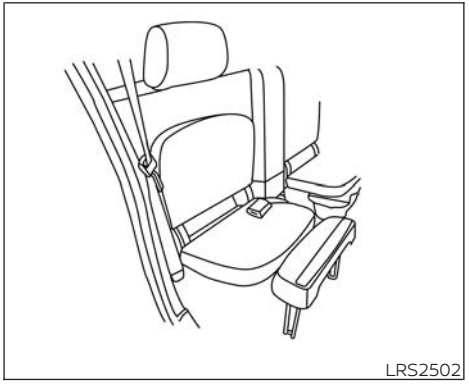

Full open seating position

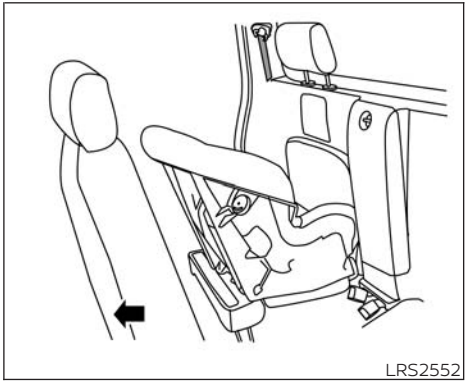

Rear-facing — step 2

2. Move the front passenger's seat into the full forward position. Then move the front seatback to the upright or tilted forward position. Position the child restraint on the jump seat. The direction of the child restraint depends on the type of the child restraint and the size of the child. Always follow the child restraint manufacturer's instructions.

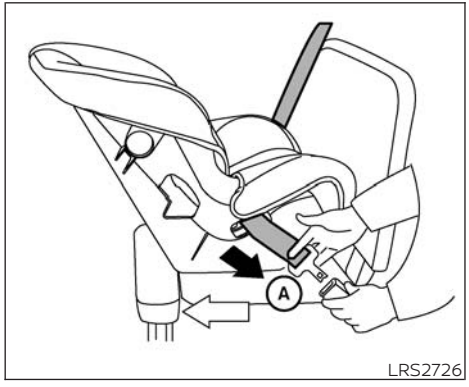

Rear-facing — step 3

3. Route the seat belt tongue through the child restraint and insert it into the buckle until you hear and feel the latch engage Ⓐ.

   Be sure to follow the child restraint manufacturer's instructions for belt routing.

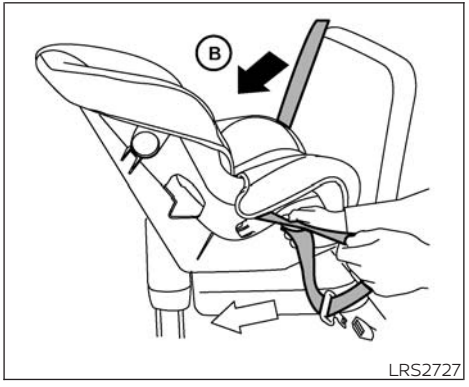

Rear-facing — step 4

4. Pull the shoulder belt until the belt is fully extended Ⓑ. At this time, the seat belt retractor is in the ALR mode (child restraint mode). It reverts to the ELR mode when the seat belt is fully retracted.

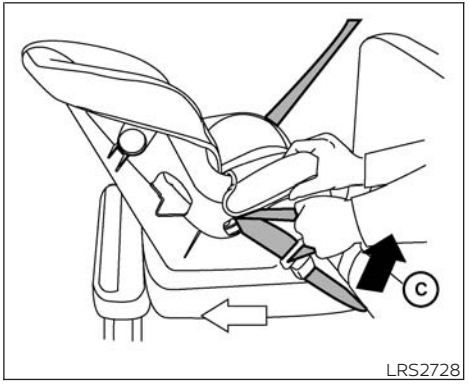

Rear-facing — step 5

5. Allow the seat belt to retract. Pull up on the shoulder belt Ⓒ to remove any slack in the belt.

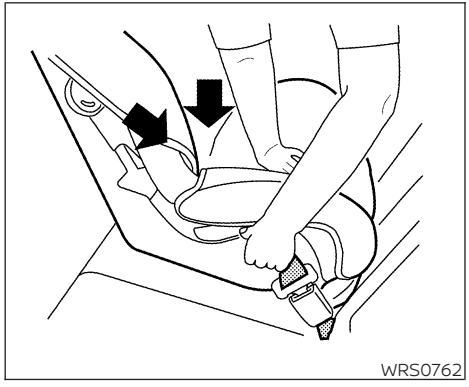

Rear-facing – step 6

6. Remove any additional slack from the seat belt; press downward and rearward firmly in the center of the child restraint to compress the vehicle seat cushion and seatback while pulling up on the seat belt.

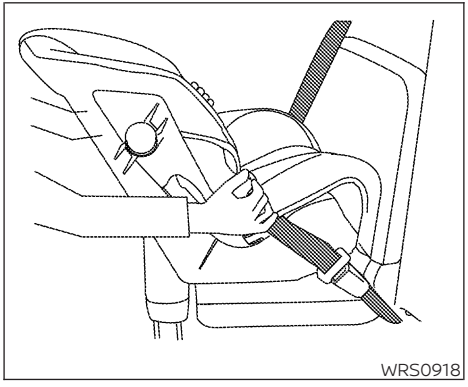

Rear-facing — step 7

7. After attaching the child restraint, test it before you place the child in it. Push it from side to side while holding the seat near the seat belt path. The child restraint should not move more than 1 inch (25 mm), from side to side. Try to tug it forward and check to see if the seat belt holds the restraint in place. If the restraint is not secure, tighten the seat belt as necessary, or put the restraint in another seat and test it again. You may need to try a different child restraint. Not all child restraints fit in all types of vehicles.
8. Check to make sure that the child restraint is properly secured prior to each use. If the seat belt is not locked, repeat steps 3 through 7.

After the child restraint is removed and the seat belt fully retracted, the ALR mode (child restraint mode) is canceled.

FORWARD-FACING CHILD RESTRAINT INSTALLATION USING LATCH (Crew Cab models)

Basic information

For additional information, see "Child safety" (P. 33) and "Child restraints" (P. 35) for all Warnings and Cautions before installing a child restraint.

Do not use the lower anchors if the combined weight of the child and the child restraint exceeds 65 lbs. (29.5 kg). If the combined weight of the child and the child restraint is greater than 65 lbs. (29.5 kg) use the vehicle's seat belt (not the lower anchors) to install the child restraint. Be sure to follow the child restraint manufacturer's instructions for installation.

Follow these steps to install a forward-facing child restraint in the rear seats using the LATCH system:

1. Position the child restraint on the seat. Always follow the child restraint manufacturer's instructions.

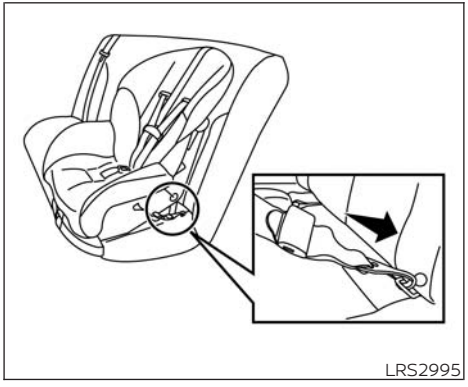

Forward-facing webbing-mounted – step 2

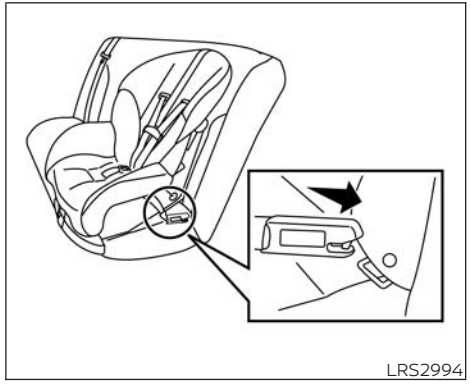

Forward-facing rigid-mounted – step 2

2. Secure the child restraint anchor attachments to the LATCH lower anchors. Check to make sure the LATCH attachment is properly attached to the lower anchors.

   If the child restraint is equipped with a top tether strap, route the top tether strap and secure the tether strap to the tether anchor point. For additional information, see "Installing top tether strap (rear bench seat for Crew Cab models)" (P. 57, 66) or "Installing top tether strap - jump seat (King® Cab models) (P. 61, 72).

Do not install child restraints that require the use of a top tether strap in seating positions that do not have a top tether anchor.

3. The back of the child restraint should be secured against the vehicle seatback.

   If necessary, adjust or remove the head restraint/headrest to obtain the correct child restraint fit. If the head restraint/headrest is removed, store it in a secure place. **Be sure to reinstall the head restraint/headrest when the child restraint is removed.** For additional information, see "Head restraints/headrests" (P. 20).

   If the seating position does not have an adjustable head restraint/headrest and it is interfering with the proper child restraint fit, try another seating position or a different child restraint.

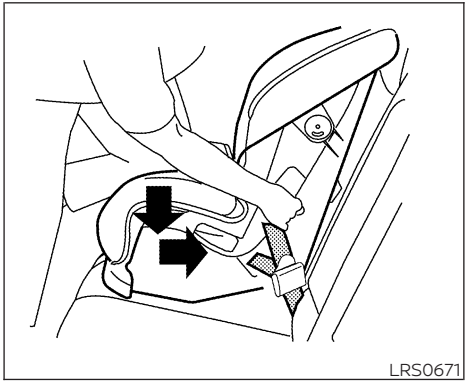

Forward-facing – step 4

4. For child restraints that are equipped with webbing-mounted attachments, remove any additional slack from the anchor attachments. Press downward and rearward firmly in the center of the child restraint with your knee to compress the vehicle seat cushion and seatback while tightening the webbing of the anchor attachments.

5. Tighten the tether strap according to the manufacturer's instructions to remove any slack.

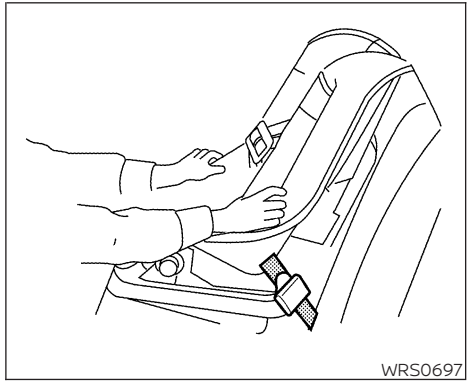

Forward-facing – step 6

6. After attaching the child restraint, test it before you place the child in it. Push it from side to side while holding the child restraint near the LATCH attachment path. The child restraint should not move more than 1 inch (25 mm), from side to side. Try to tug it forward and check to see if the LATCH attachment holds the restraint in place. If the restraint is not secure, tighten the LATCH attachment as necessary, or put the restraint in another seat and test it again. You may need to try a different child restraint. Not all child restraints fit in all types of vehicles.

7. Check to make sure the child restraint is properly secured prior to each use. If the child restraint is loose, repeat steps 3 through 6.

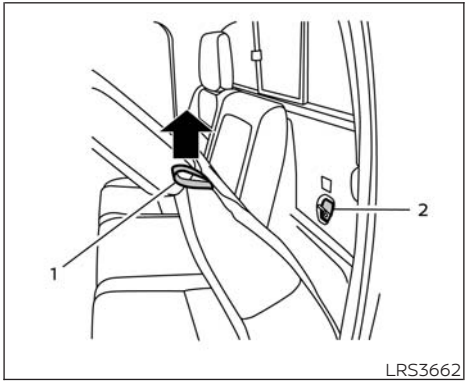

Anchor point access

1. Pull strap
2. Anchor points

Installing top tether strap (rear bench seat for Crew Cab models)

To access the anchor points behind the rear bench seat, tilt the rear seatback forward by lifting up on the pull strap behind the seatback.

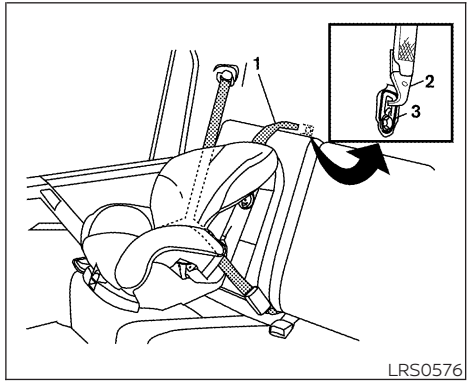

Rear bench seat (Crew Cab models)

1. Top tether strap
2. Tether strap
3. Tether anchor point

Before securing the child restraint with the LATCH lower anchors (rear outboard seating positions for Crew Cab models) follow these steps.

1. If necessary, raise or remove the head restraint/headrest to position the top tether strap as shown. If the head restraint/headrest is removed, store it in a secure place. Be sure to reinstall the head restraint/headrest when the child

restraint is removed. For additional information, see "Head restraints/headrests" (P. 20).

2. Position the top tether strap as shown.
3. Secure the tether strap to the tether anchor point as shown.
4. Return the seatback to the locked position.
5. Refer back to child restraint installation steps before tightening the tether strap.

If you have any questions when installing a top tether strap, it is recommended that you visit a NISSAN dealer for this service.

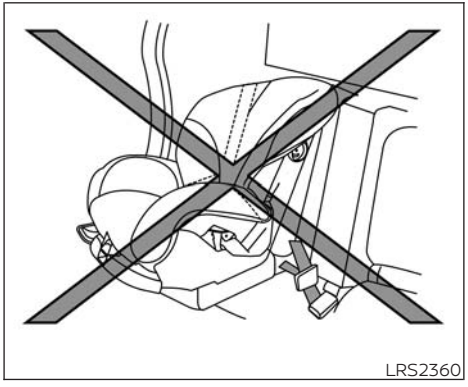

FORWARD-FACING CHILD RESTRAINT INSTALLATION USING LATCH — JUMP SEAT (King Cab® models)

Basic information

⚠WARNING

- **If a child restraint system is not installed properly, the child could be seriously injured or killed in a sudden stop or collision.**
  - **Do not install a child restraint system on the passenger's side jump seat without unfolding the seat extender.**
  - **For forward-facing child seats and boosters, DO NOT install if the child restraint base extends past the forward edge of the driver's side seat cushion.**

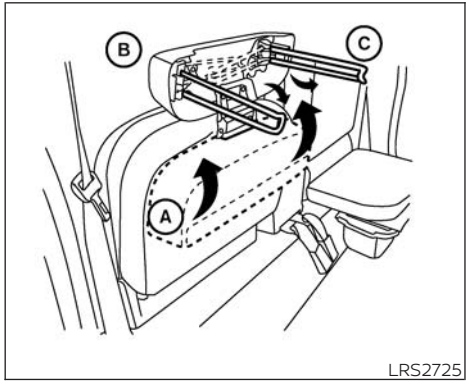

For additional information, see "Child safety" (P. 33) and "Child restraints" (P. 35) for all Warnings and Cautions before installing a child restraint.

Do not use the lower anchors if the combined weight of the child and the child restraint exceeds 65 lbs. (29.5 kg). If the combined weight of the child and the child restraint is greater than 65 lbs. (29.5 kg), use the vehicle's seat belt (not the lower anchors) to install the child restraint. Be sure to follow the child restraint manufacturer's instructions for installation.

Follow these steps to install a child restraint on the jump seat.

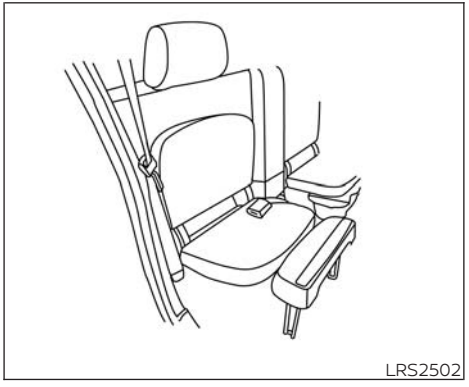

Full open seating position

1. To access the jump seat extension (passenger's side only) Ⓐ on the jump seat, pull up Ⓑ on the extension to unfold it to the open position. Then unfold the two support legs Ⓒ and lower the jump seat to the full open seating position.
2. Position the child restraint on the seat. Always follow the child restraint manufacturer's instructions.

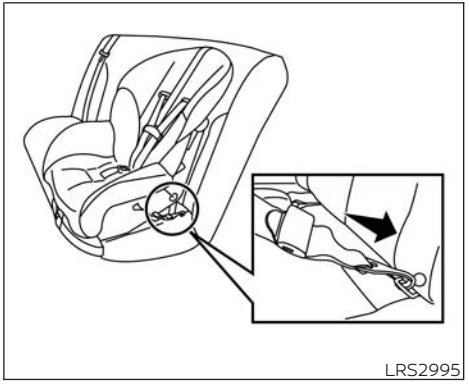

Forward-facing webbing-mounted – step 3

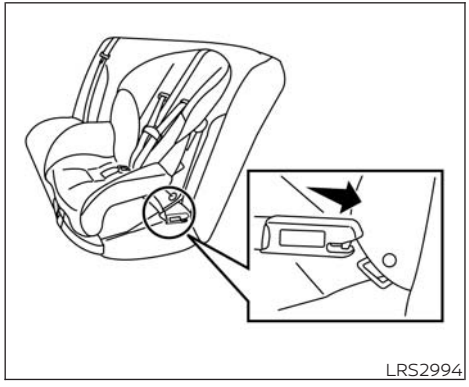

Forward-facing rigid-mounted – step 3

3. Secure the child restraint anchor attachments to the LATCH lower anchors. Check to make sure the LATCH attachment is properly attached to the lower anchors.

   If the child restraint is equipped with a top tether strap, route the top tether strap and secure the tether strap to the tether anchor point. For additional information, see "Installing top tether strap - jump seat (King Cab® models)" (P. 61). Do not install child restraints that require the use of a top tether strap in seating positions that do not have a top tether anchor.

4. The back of the child restraint should be secured against the vehicle seatback.

   If necessary, adjust or remove the head restraint/headrest to obtain the correct child restraint fit. If the head restraint/headrest is removed, store it in a secure place. **Be sure to reinstall the head restraint/headrest when the child restraint is removed.** For additional information, see "Head restraints/headrests" (P. 20).

   If the seating position does not have an adjustable head restraint/headrest and it is interfering with the proper child restraint fit, try another seating position or a different child restraint.

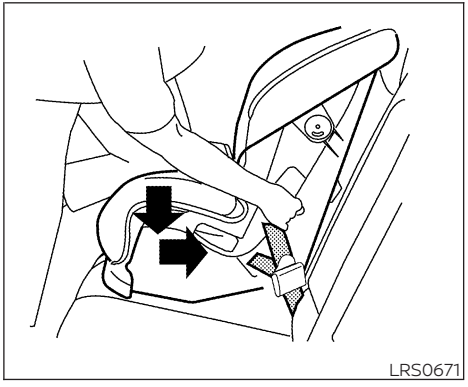

Forward-facing – step 5

5. For child restraints that are equipped with webbing-mounted attachments, remove any additional slack from the anchor attachments. Press downward and rearward firmly in the center of the child restraint with your knee to compress the vehicle seat cushion and seatback while tightening the webbing of the anchor attachments.

6. Tighten the tether strap according to the manufacturer's instructions to remove any slack.

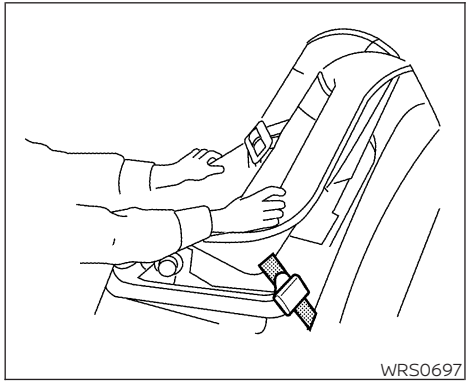

Forward-facing – step 7

7. After attaching the child restraint, test it before you place the child in it. Push it from side to side while holding the child restraint near the LATCH attachment path. The child restraint should not move more than 1 inch (25 mm), from side to side. Try to tug it forward and check to see if the LATCH attachment holds the restraint in place. If the restraint is not secure, tighten the LATCH attachment as necessary, or put the restraint in another seat and test it again. You may need to try a different child restraint. Not all child restraints fit in all types of vehicles.
8. Check to make sure the child restraint is properly secured prior to each use. If the child restraint is loose, repeat steps 1 through 7.

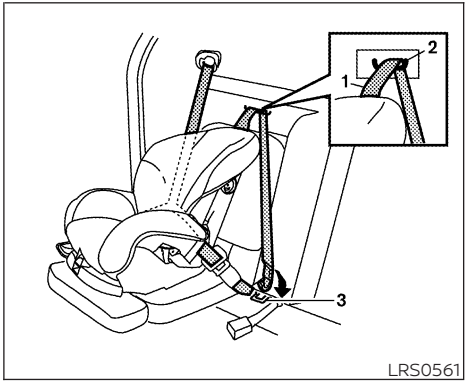

Jump seat (King Cab® models)

1. Top tether strap
2. Routing bracket
3. Tether anchor point

Installing top tether strap — jump seat (King Cab® models)

⚠ WARNING

- **Do not secure the top tether strap to the routing bracket. If the child restraint is not anchored properly, the**

risk of a child being injured or killed in a collision or a sudden stop greatly increases.

- **Child restraint anchorages are designed to withstand only those loads imposed by correctly fitted child restraints. Under no circumstances are they to be used to attach adult seat belts, or other items or equipment to the vehicle. Doing so could damage the child restraint anchorages. The child restraint will not be properly installed using the damaged anchorages, and a child could be seriously injured or killed in a collision.**

The child restraint top tether strap must be used when installing the child restraint with LATCH lower anchor attachments.

First, secure the child restraint with the LATCH lower anchors (rear seating positions).

1. Pull the cover plate off to access the top tether strap routing bracket for the jump seat.
2. Route the top tether strap through the routing bracket.
3. Secure the top tether strap to the tether anchor point as shown.
4. Refer back to child restraint installation steps before tightening the tether strap.

If you have any questions when installing a top tether strap, it is recommended that you visit a NISSAN dealer for this service.

FORWARD-FACING CHILD RESTRAINT INSTALLATION USING THE SEAT BELTS — FRONT PASSENGER AND REAR BENCH SEAT (Crew Cab models)

Basic information

⚠WARNING

The three-point seat belt with Automatic Locking Retractor (ALR) must be used when installing a child restraint. Failure to use the ALR mode will result in the child restraint not being properly secured. The restraint could tip over or be loose and cause injury to a child in a sudden stop or collision. Also, it can change the operation of the front passenger air bag. For additional information, see "Front passenger air bag and status light" (P. 90).

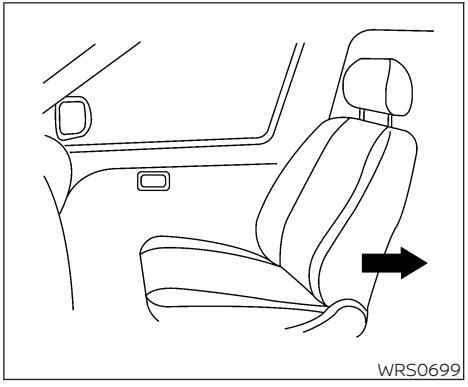

Forward-facing (front passenger seat) – step 1

For additional information, see "Child safety" (P. 33) and "Child restraints" (P. 35) for all Warnings and Cautions before installing a child restraint.

Do not use the lower anchors if the combined weight of the child and the child restraint exceeds 65 lbs. (29.5 kg). If the combined weight of the child and the child restraint is greater than 65 lbs. (29.5 kg), use the vehicle's seat belt (not the lower anchors) to install the child restraint. Be sure to follow the child restraint manufacturer's instructions for installation.

Follow these steps to install a forward-facing child restraint using the vehicle seat belt in the rear seats (Crew Cab models) or in the front passenger seat:

1. **If you must install a child restraint in the front seat, it should be placed in a forward-facing direction only. Move the seat to the rearmost position. Child restraints for infants must be used in the rear-facing direction and therefore must not be used in the front seat.**
2. Position the child restraint on the seat. Always follow the child restraint manufacturer's instructions.

   The back of the child restraint should be secured against the vehicle seatback.

   If necessary, adjust or remove the head restraint/headrest to obtain the correct child restraint fit. If the head restraint/headrest is removed, store it in a secure place. **Be sure to reinstall the head restraint/headrest when the child restraint is removed.** For additional information, see "Head restraints/headrests" (P. 20).

If the seating position does not have an adjustable head restraint/headrest and it is interfering with the proper child restraint fit, try another seating position or a different child restraint.

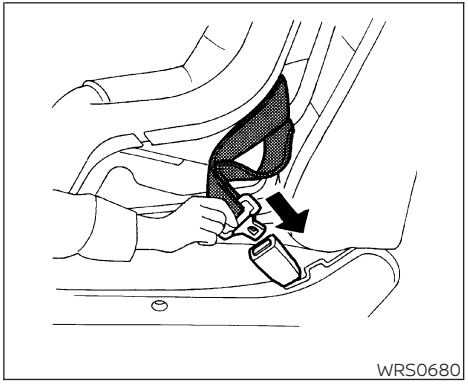

Forward-facing – step 3

3. Route the seat belt tongue through the child restraint and insert it into the buckle until you hear and feel the latch engage. Be sure to follow the child restraint manufacturer's instructions for belt routing.

   If the child restraint is equipped with a top tether strap, route the top tether strap and secure the tether strap to the tether anchor point (rear seat installation only). For additional information, see "Installing top tether strap (rear bench seat for Crew Cab models)" (P. 66).

Do not install child restraints that require the use of a top tether strap in seating positions that do not have a top tether anchor.

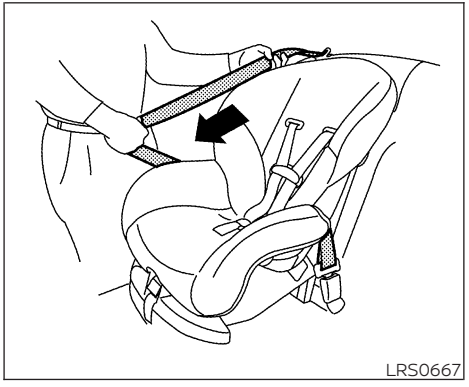

Forward-facing – step 4

4. Pull the shoulder belt until the belt is fully extended. At this time, the seat belt retractor is in the ALR mode (child restraint mode). It reverts to ELR mode when the seat belt is fully retracted.

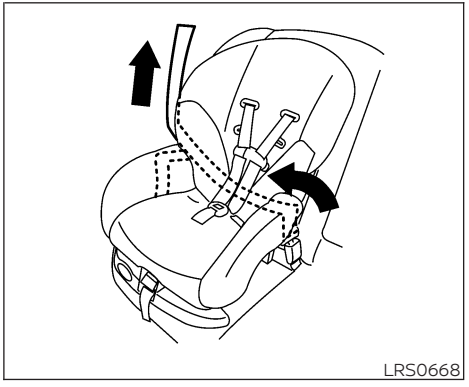

Forward-facing – step 5

5. Allow the seat belt to retract. Pull up on the shoulder belt to remove any slack in the belt.

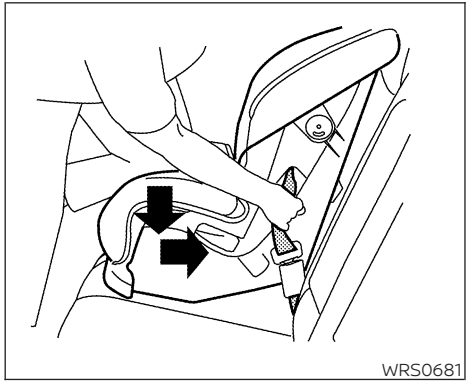

Forward-facing – step 6

6. Remove any additional slack from the seat belt; press downward and rearward firmly in the center of the child restraint with your knee to compress the vehicle seat cushion and seatback while pulling up on the seat belt.
7. Tighten the tether strap according to the manufacturer's instructions to remove any slack.

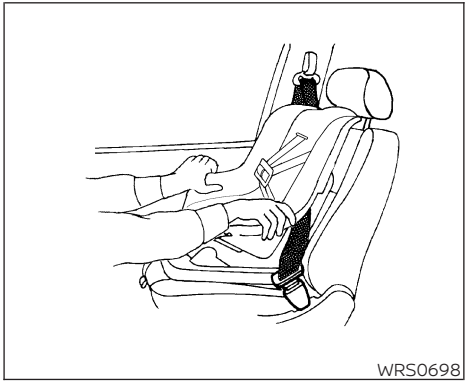

Forward-facing – step 8

8. After attaching the child restraint, test it before you place the child in it. Push it from side to side while holding the child restraint near the seat belt path. The child restraint should not move more than 1 inch (25 mm), from side to side. Try to tug it forward and check to see if the seat belt holds the restraint in place. If the restraint is not secure, tighten the seat belt as necessary, or put the restraint in another seat and test it again. You may need to try a different child restraint. Not all child restraints fit in all types of vehicles.
9. Check to make sure the child restraint is properly secured prior to each use. If the seat belt is not locked, repeat steps 3 through 8.

Forward-facing – step 10

10. If the child restraint is installed in the front passenger seat, place the ignition switch in the ON position. The front passenger air bag status light OFF should illuminate. If this light is not illuminated, see "Front passenger air bag and status light" (P. 90). **Move the child restraint to another seating position.** Have the system checked. It is recommended that you visit a NISSAN dealer for this service.

After the child restraint is removed and the seat belt is fully retracted, the ALR mode (child restraint mode) is canceled.

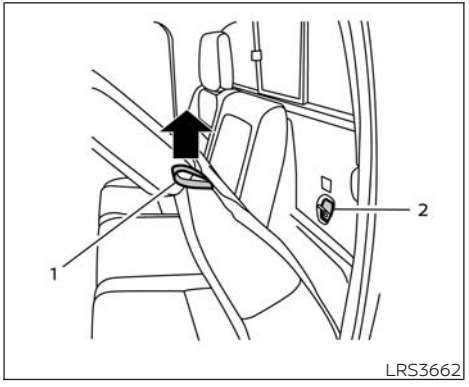

Anchor point access

1. Pull strap
2. Anchor points

Installing top tether strap (rear bench seat for Crew Cab models)

To access the anchor points behind the rear bench seat, tilt the rear seatback forward by lifting up on the pull strap behind the seatback.

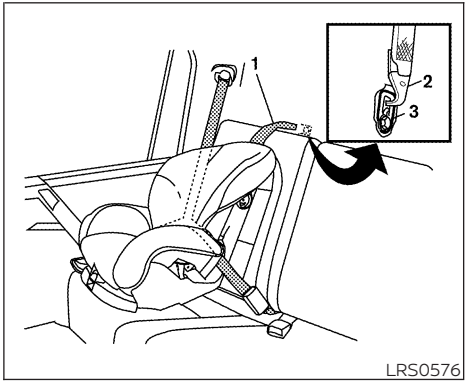

Rear bench seat (Crew Cab models)

1. Top tether strap
2. Tether strap
3. Tether anchor point

The child restraint top tether strap must be used when installing the child restraint with the seat belts.

First, secure the child restraint with the seat belt.

1. If necessary, raise or remove the head restraint/headrest to position the top tether strap as shown. If the head restraint/headrest is removed, store it in

a secure place. Be sure to reinstall the head restraint/headrest when the child restraint is removed. For additional information, see "Head restraints/headrests" (P. 20).

2. Position the top tether strap as shown.
3. Secure the tether strap to the tether anchor point as shown.
4. Return the seatback to the locked position.
5. Refer back to child restraint installation steps before tightening the tether strap.

If you have any questions when installing a top tether strap, it is recommended that you visit a NISSAN dealer for this service.

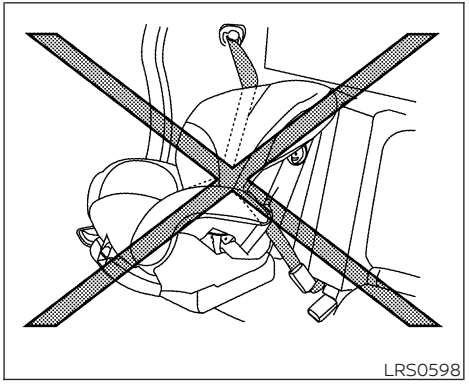

FORWARD-FACING CHILD RESTRAINT INSTALLATION USING THE SEAT BELTS — FRONT PASSENGER AND JUMP SEATS (King Cab® models)

Basic information

⚠WARNING

- **The three-point seat belt with Automatic Locking Retractor (ALR) must be used when installing a child restraint. Failure to use the ALR mode will result in the child restraint not being properly secured. The restraint could tip over or be loose and cause injury to a child in a sudden stop or collision. Also, it can change the operation of the front passenger air bag. For additional information, see "Front passenger air bag and status light" (P. 90).**
- **If a child restraint system is not installed properly, the child could be seriously injured or killed in a sudden stop or collision.**
  - **Do not install a child restraint system on the passenger's side jump seat without unfolding the seat extender.**
  - **For forward-facing child seats and boosters, DO NOT install if the child restraint system base extends past the forward edge of the driver's side seat cushion.**

For additional information, see "Child safety" (P. 33) and "Child restraints" (P. 35) for all Warnings and Cautions before installing a child restraint.

Do not use the lower anchors if the combined weight of the child and the child restraint exceeds 65 lbs. (29.5 kg). If the combined weight of the child and the child restraint is greater than 65 lbs. (29.5 kg) use the vehicle's seat belt (not the lower anchors) to install the child restraint. Be sure to follow the child restraint manufacturer's instructions for installation.

Follow these steps to install a forward-facing child restraint using the vehicle seat belt in the jump seats (King Cab® models) or in the front passenger seat:

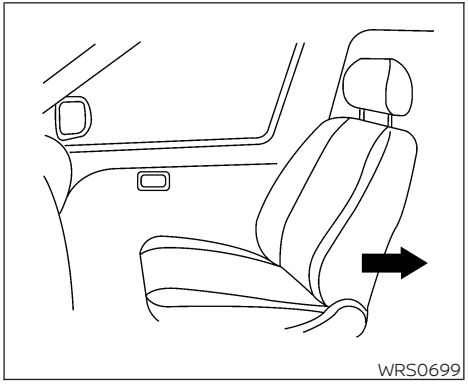

Forward-facing (front passenger seat) – step 1

1. **If you must install a child restraint in the front seat, it should be placed in a forward-facing direction only. Move the seat to the rearmost position. Child restraints for infants must be used in the rear-facing direction and therefore must not be used in the front seat.**

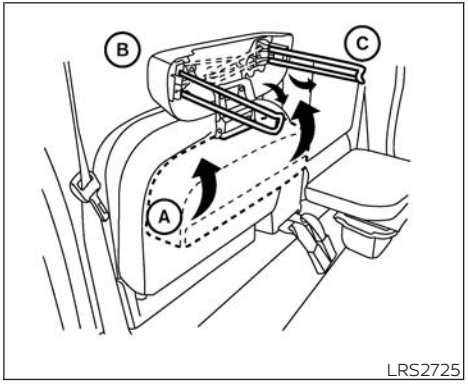

Forward-facing (jump seat for King Cab® models) — step 2

2. To access the jump seat extension (passenger's side only) Ⓐ on the jump seat, pull up Ⓑ on the extension to unfold it to the open position. Then unfold the two support legs Ⓒ and lower the jump seat to the full open seating position.

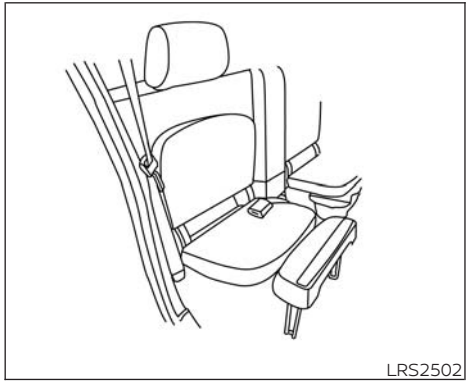

Full open seating position

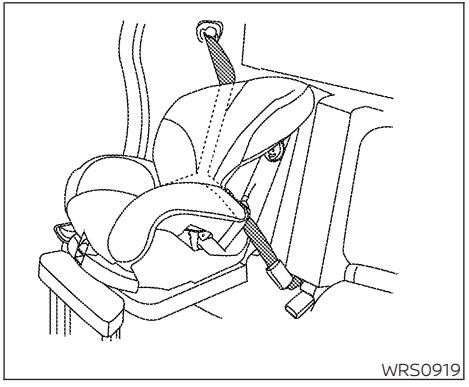

Forward-facing — step 3

3. Position the child restraint on the seat. Always follow the child restraint manufacturer's instructions.

   The back of the child restraint should be secured against the vehicle seatback.

   If necessary, adjust or remove the head restraint/headrest to obtain the correct child restraint fit. If the head restraint/headrest is removed, store it in a secure place. **Be sure to reinstall the head restraint/headrest when the child restraint is removed.** For additional information, see "Head restraints/headrests" (P. 20).

If the seating position does not have an adjustable head restraint/headrest and it is interfering with the proper child restraint fit, try another seating position or a different child restraint.

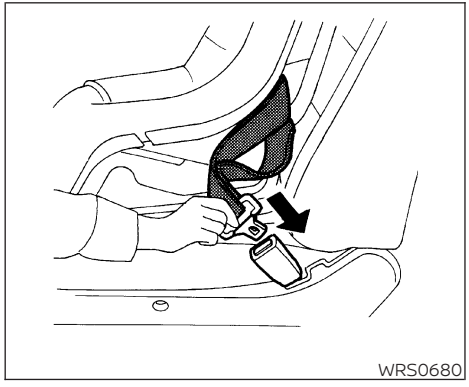

Forward-facing — step 4

4. Route the seat belt tongue through the child restraint and insert it into the buckle until you hear and feel the latch engage. Be sure to follow the child restraint manufacturer's instructions for belt routing.

   If the child restraint is equipped with a top tether strap, route the top tether strap and secure the tether strap to the tether anchor point. For additional information, see "Installing top tether strap - jump seat (King Cab® models)" (P. 72).

Do not install child restraints that require the use of a top tether strap to seating positions that do not have a top tether anchor.

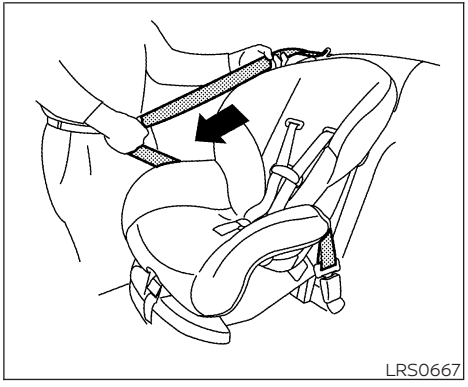

Forward-facing — step 5

5. Pull the shoulder belt until the belt is fully extended. At this time, the seat belt retractor is in the ALR mode (child restraint mode). It reverts to the ELR mode when the seat belt is fully retracted.

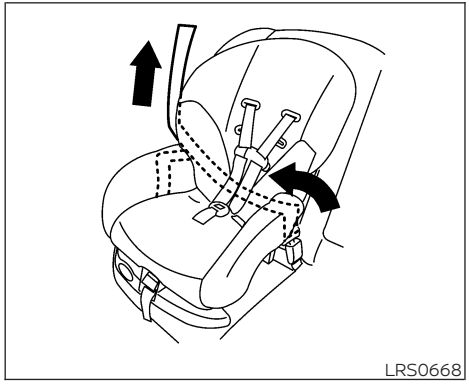

Forward-facing — step 6

6. Allow the seat belt to retract. Pull up on the shoulder belt to remove any slack in the belt.

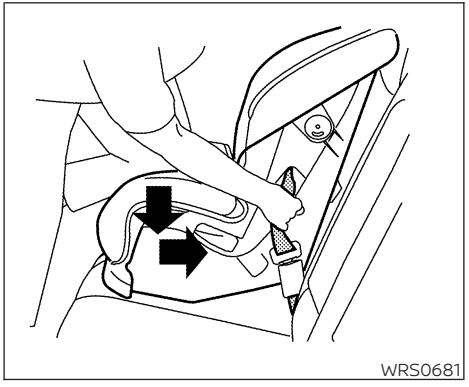

Forward-facing – step 7

7. Remove any additional slack from the seat belt; press downward and rearward firmly in the center of the child restraint with your knee to compress the vehicle seat cushion and seatback while pulling up on the seat belt.

8. Tighten the tether strap according to the manufacturer's instructions to remove any slack.

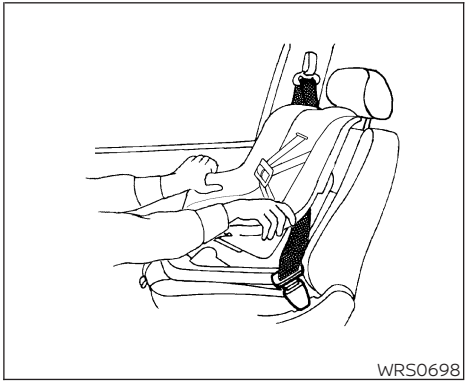

Forward-facing — step 9

9. After attaching the child restraint, test it before you place the child in it. Push it from side to side while holding the seat near the seat belt path. The child restraint should not move more than 1 inch (25 mm) from side to side. Try to tug it forward and check to see if the belt holds the restraint in place. If the restraint is not secure, tighten the belt as necessary, or put the restraint in another seat and test it again. You may need to try a different child restraint. Not all child restraints fit in all types of vehicles.

10. Check to make sure that the child restraint is properly secured prior to each use. If the seat belt is not locked, repeat steps 3 through 9.

Forward-facing — step 11

11. If the child restraint is installed in the front passenger seat, place the ignition switch in the ON position. The front passenger air bag status light OFF should illuminate. If this light is not illuminated, see "Front passenger air bag and status light" (P. 90). **Move the child restraint to another seating position.** Have the system checked. It is recommended that you visit a NISSAN dealer for this service.

After the child restraint is removed and the seat belt is fully retracted, the ALR mode (child restraint mode) is canceled.

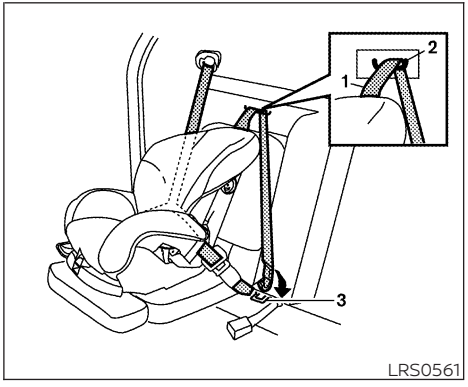

Jump seat (King Cab® models)

1. Top tether strap
2. Routing bracket
3. Tether anchor point

Installing top tether strap — jump seat (King Cab® models)

⚠ WARNING

- **Do not secure the top tether strap to the routing bracket. If the child restraint is not anchored properly, the**

risk of a child being injured or killed in a collision or a sudden stop greatly increases.

- **Child restraint anchorages are designed to withstand only those loads imposed by correctly fitted child restraints. Under no circumstances are they to be used to attach adult seat belts, or other items or equipment to the vehicle. Doing so could damage the child restraint anchorages. The child restraint will not be properly installed using the damaged anchorages, and a child could be seriously injured or killed in a collision.**

The child restraint top tether strap must be used when installing the child restraint with the seat belts.

First, secure the child restraint with the seat belt.

1. Pull the cover plate off to access the top tether strap routing bracket for the jump seat.
2. Route the top tether strap through the routing bracket.
3. Secure the top tether strap to the tether anchor point as shown.
4. Refer back to child restraint installation steps before tightening the tether strap.

If you have any questions when installing a top tether strap, it is recommended that you visit a NISSAN dealer for this service.

BOOSTER SEATS

Basic Information

For additional information on installing a booster seat in your vehicle, follow the instructions outlined in this section.

Precautions on booster seats

⚠ WARNING

If a booster seat and seat belt are not used properly, the risk of a child being injured or killed in a sudden stop or collision greatly increases:

- **Make sure the shoulder portion of the belt is away from the child's face and neck and the lap portion of the belt does not cross the stomach.**
- **Make sure the shoulder belt is not behind the child or under the child's arm.**
- **A booster seat must only be installed in a seating position that has a lap/shoulder belt.**

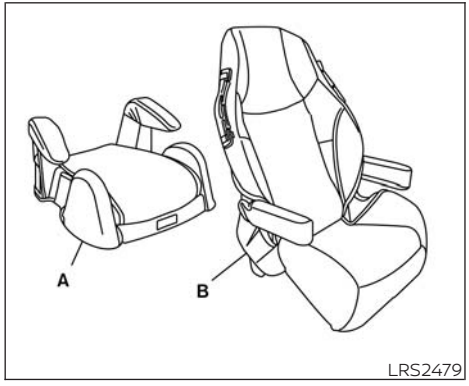

A. Low back booster seat

B. High back booster seat

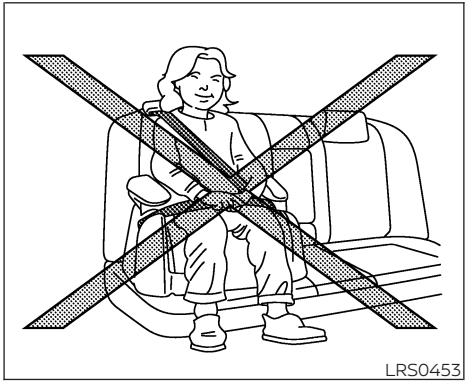

Booster seats of various sizes are offered by several manufacturers. When selecting any booster seat, keep the following points in mind:

- Choose only a booster seat with a label certifying that it complies with Federal Motor Vehicle Safety Standard 213 or Canadian Motor Vehicle Safety Standard 213.
- Check the booster seat in your vehicle to be sure it is compatible with the vehicle's seat and seat belt system.

- Make sure the child's head will be properly supported by the booster seat or vehicle seat. The seatback must be at or above the center of the child's ears. For example, if a low back booster seat is chosen, the vehicle seatback must be at or above the center of the child's ears. If the seatback is lower than the center of the child's ears, a high back booster seat should be used.
- If the booster seat is compatible with your vehicle, place the child in the booster seat and check the various adjustments to be sure the booster seat is compatible with the child. Always follow all recommended procedures.

All U.S. states and Canadian provinces or territories require that infants and small children be restrained in an approved child restraint at all times while the vehicle is being operated.

The instructions in this section apply to booster seat installation in the rear seats or the front passenger seat.

Booster seat installation — front passenger seat (all models) and rear seat (Crew Cab models)

⚠WARNING

To avoid injury to child, do not use the lap/shoulder belt in the Automatic Locking Retractor (ALR) mode when using a booster seat with the seat belts.

For additional information, see "Child safety" (P. 33), "Child restraints" (P. 35) and "Booster seats" (P. 73) for all Warnings and Cautions before installing a child restraint.

Follow these steps to install a booster seat in the rear seat or in the front passenger seat:

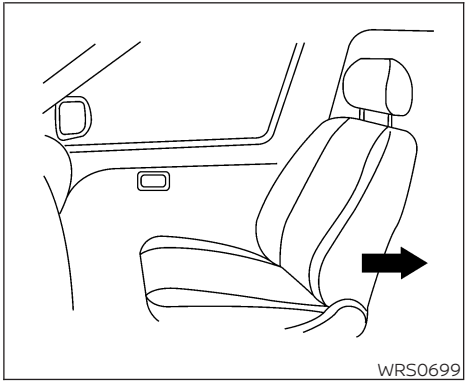

1. **If you must install a booster seat in the front seat, move the seat to the rearmost position.**

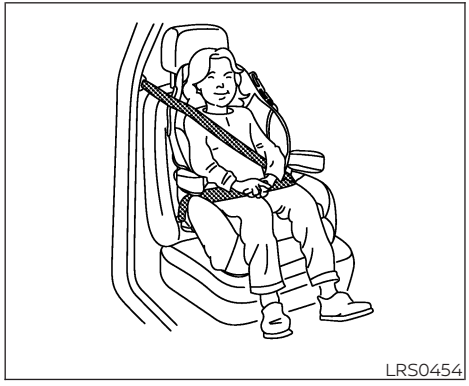

Front passenger position

Rear center position

Rear outboard position

2. Position the booster seat on the seat. Only place it in a front-facing direction. Always follow the booster seat manufacturer's instructions.
3. The booster seat should be positioned on the vehicle seat so that it is stable.

   If necessary, adjust or remove the head restraint/headrest to obtain the correct booster seat fit. If the head restraint/headrest is removed, store it in a secure place. **Be sure to reinstall the head restraint/headrest when the booster**

seat is removed. For additional information, see "Head restraints/headrests" (P. 20).

If the seating position does not have an adjustable head restraint/headrest and it is interfering with the proper booster seat fit, try another seating position or a different booster seat.

4. Position the lap portion of the seat belt low and snug on the child's hips. Be sure to follow the booster seat manufacturer's instructions for adjusting the seat belt routing.
5. Pull the shoulder belt portion of the seat belt toward the retractor to take up extra slack. Be sure the shoulder belt is positioned across the top, middle portion of the child's shoulder. Be sure to follow the booster seat manufacturer's instructions for adjusting the seat belt routing.
6. Follow the warnings, cautions and instructions for properly fastening a seat belt shown in "Three-point type seat belt with retractor" (P. 29).

7. If the booster seat is installed in the front passenger seat, place the ignition switch in the ON position. The front passenger air bag status light OFF may or may not illuminate, depending on the size of the child and the type of booster seat being used. For additional information, see "Front passenger air bag and status light" (P. 90).

Booster seat installation — jump seat (King Cab® models)

⚠WARNING

- **If a child restraint system is not installed properly, the child could be seriously injured or killed in a sudden stop or collision.**
  - **For boosters, DO NOT install if the child restraint system base extends past the forward edge of the seat cushion.**
  - **Do not install a child restraint system on the passenger's side jump seat without unfolding the seat extender.**
- **To avoid injury to child, do not use the lap/shoulder belt in the Automatic Locking Retractor (ALR) mode when using a booster seat with the seat belts.**

For additional information, see "Child safety" (P. 33), "Child restraints" (P. 35) and "Booster seats" (P. 73) for all Warnings and Cautions before installing a child restraint.

Follow these steps to install a booster seat in the jump seats:

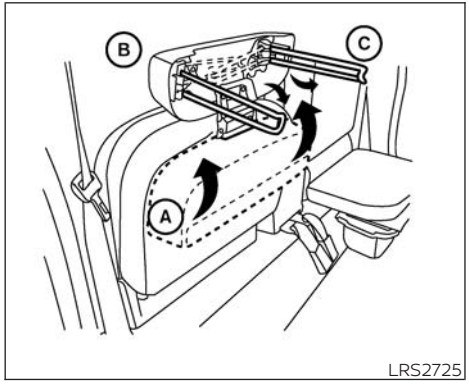

1. To access the jump seat extension (passenger's side only) Ⓐ on the jump seat, pull up Ⓑ on the extension to unfold it to the open position. Then unfold the two support legs Ⓒ and lower the jump seat to the full open seating position.

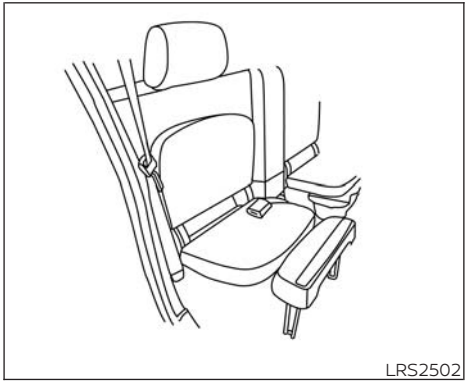

2. Position the booster seat on the seat. Only place it in a front-facing direction. Always follow the booster seat manufacturer's instructions.

3. The booster seat should be positioned on the vehicle seat so that it is stable.

   If necessary, adjust or remove the head restraint/headrest to obtain the correct booster seat fit. If the head restraint/headrest is removed, store it in a secure place. **Be sure to reinstall the head restraint/headrest when the booster**

seat is removed. For additional information, see "Head restraint/headrest" (P. 20).

If the seating position does not have an adjustable head restraint/headrest and it is interfering with the proper booster seat fit, try another seating position or a different booster seat.

4. Position the lap portion of the seat belt low and snug on the child's hips. Be sure to follow the booster seat manufacturer's instructions for adjusting the seat belt routing.
5. Pull the shoulder belt portion of the seat belt toward the retractor to take up extra slack. Be sure the shoulder belt is positioned across the top, middle portion of the child's shoulder. Be sure to follow the booster seat manufacturer's instructions for adjusting the seat belt routing.
6. Follow the warnings, cautions and instructions for properly fastening a seat belt shown in "Three-point type seat belt with retractor" (P. 29).

PRECAUTIONS ON SRS

Basic Information

This SRS section contains important information concerning the following systems:

- Driver and front passenger supplemental front-impact air bag (NISSAN Advanced Air Bag System)
- Front seat-mounted side-impact supplemental air bag
- Roof-mounted curtain side-impact and rollover supplemental air bag
- Driver and front passenger supplemental knee air bag
- Seat belt with pretensioner(s) (front and rear outboard seats)

Supplemental front-impact air bag system

The NISSAN Advanced Air Bag System can help cushion the impact force to the head and chest of the driver and front passenger in certain frontal collisions.

Front seat-mounted side-impact supplemental air bag system

This system can help cushion the impact force to the chest area of the driver and front passenger in certain side-impact collisions. The side air bags are designed to inflate on the side where the vehicle is impacted.

Roof-mounted curtain side-impact and rollover supplemental air bag system

This system can help cushion the impact force to the head of occupants in front and rear outboard seating positions in certain side-impact or rollover collisions. In a side-impact, the curtain air bags are designed to inflate on the side where the vehicle is impacted. In a rollover, the curtain air bags are designed to inflate and remain inflated for a short time.

Driver and front passenger supplemental knee air bags

This system can help cushion the impact force to the driver's and front passenger's knees in certain collisions.

The SRS is designed to **supplement** the crash protection provided by the seat belts and is **not a substitute** for them. Seat belts should always be correctly worn and the occupant seated a suitable distance away from the steering wheel, instrument panel and door finishers. For additional information, see "Seat belts" (P. 25).

The supplemental air bags operate only when the ignition switch is in the ON position.

After placing the ignition switch in the ON position, the supplemental air bag warning light illuminates. The supplemental air bag warning light will turn off after about 7 seconds if the system is operational.

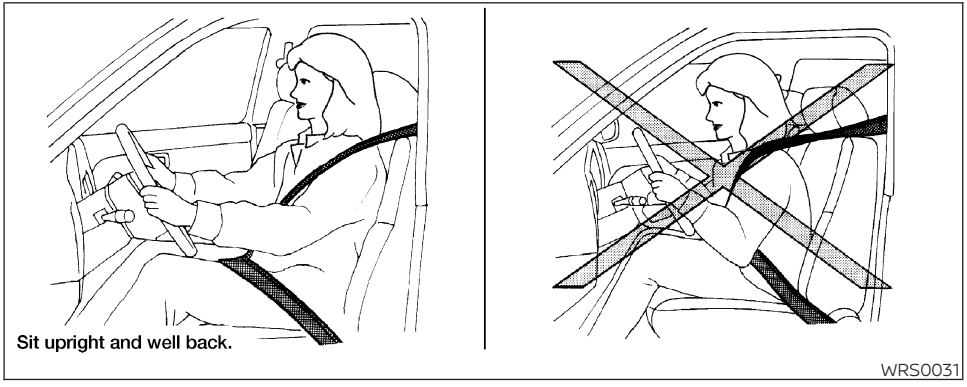

⚠WARNING

- **The front air bags ordinarily will not inflate in the event of a side impact, rear impact, rollover, or lower severity frontal collision. Always wear your seat belts to help reduce the risk or severity of injury in various kinds of accidents.**
- **The front passenger air bag and front passenger supplemental knee air bag will not inflate if the passenger air bag status light is lit or if the front passenger seat is unoccupied. For additional information, see "Front passenger air bag and status light" (P. 90).**

- **The seat belts and the front air bags are most effective when you are sitting well back and upright in the seat. The front air bags inflate with great force. Even with the NISSAN Advanced Air Bag System, if you are unrestrained, leaning forward, sitting sideways or out of position in any way, you are at greater risk of injury or death in a crash. You may also receive serious or fatal injuries from the front air bag if you are up against it when it inflates. Always sit back against the seatback and as far away as practical from the steering wheel or instrument panel. Always properly use the seat belts.**
- **The driver and front passenger seat belt buckles are equipped with sensors that detect if the seat belts are fastened. The NISSAN Advanced Air Bag System monitors the severity of a collision and seat belt usage, then inflates the air bags as needed. Failure to properly wear seat belts can increase the risk or severity of injury in an accident.**
- **The front passenger seat is equipped with an occupant classification sensor (weight sensors) that turns the front passenger air bag and front passenger supplemental knee air bag OFF under some conditions. This sensor is only used in this seat. Failure to be properly seated and wearing the seat belt can increase the risk or severity of injury in an accident. For additional information, see "Front passenger air bag and status light" (P. 90).**
- **Keep hands on the outside of the steering wheel. Placing them inside the steering wheel rim could increase the risk that they are injured when the front air bag inflates.**

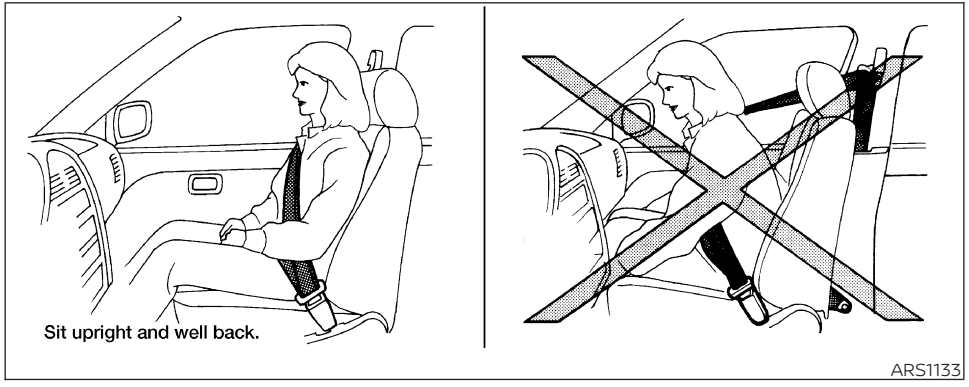

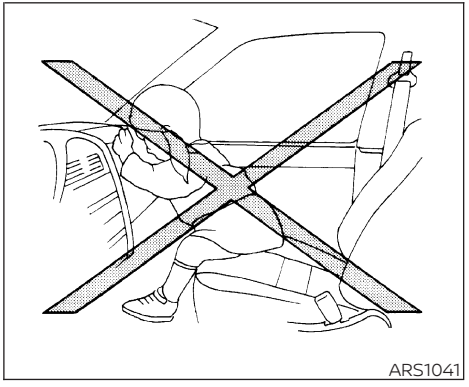

⚠ WARNING

- **Never let children ride unrestrained or extend their hands or face out of the window. Do not attempt to hold them in your lap or arms. Some examples of dangerous riding positions are shown in the illustrations.**

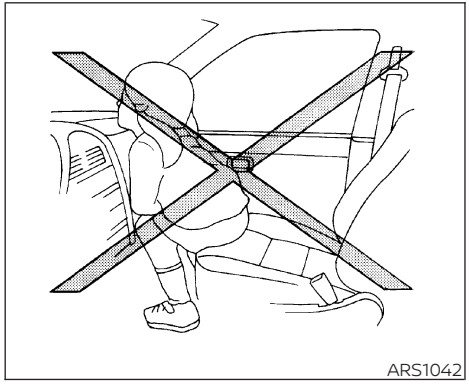
ARS1042

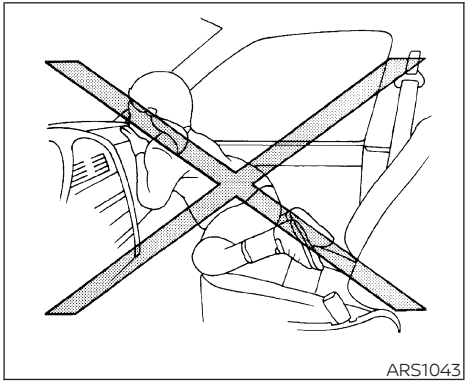
ARS1043

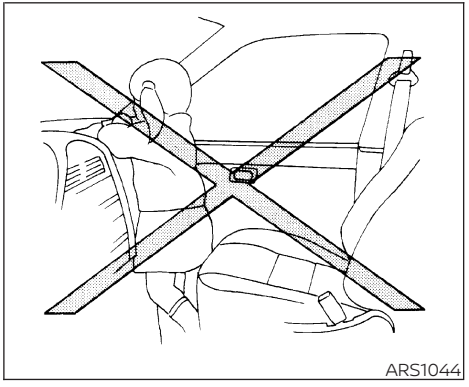
ARS1044

⚠ WARNING

- **Children may be severely injured or killed when the front air bags, side air bags or curtain air bags inflate if they are not properly restrained. Preteens and children should be properly restrained in the rear seat, if possible.**

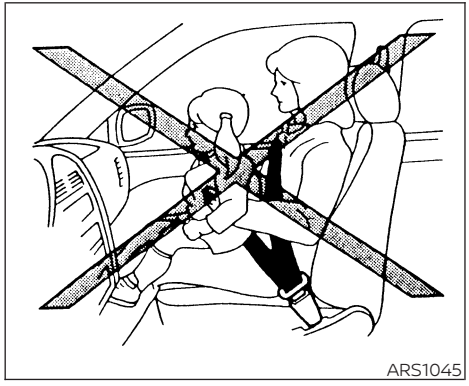
ARS1045

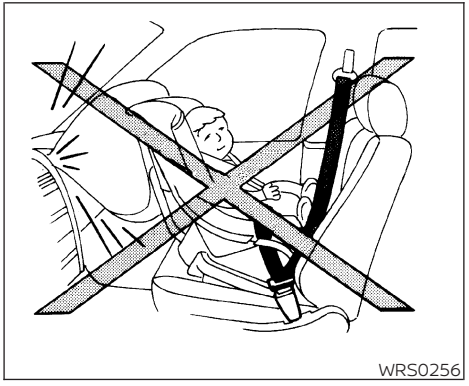
WRS0256

WARNING

- **Even with the NISSAN Advanced Air Bag System, never install a rear-facing child restraint in the front seat. An inflating front air bag could seriously injure or kill your child. For additional information, see "Child restraints" (P. 35).**

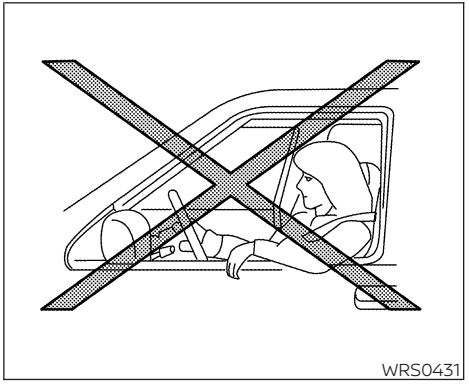
WRS0431

Do not lean against the door.

WARNING

Front seat-mounted side-impact supplemental air bags and roof-mounted curtain side-impact and rollover supplemental air bags:

- **The side air bags and curtain air bags ordinarily will not inflate in the event of a frontal impact, rear impact, or lower severity side collision. Always wear your seat belts to help reduce the risk or severity of injury in various kinds of accidents.**

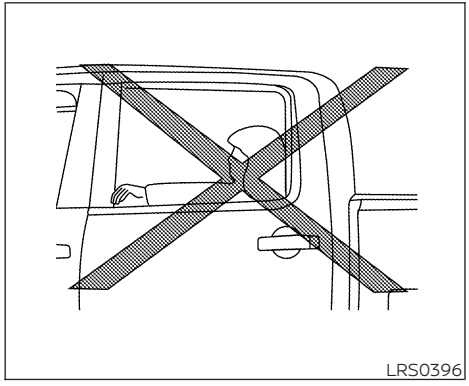

Do not lean against doors or windows.

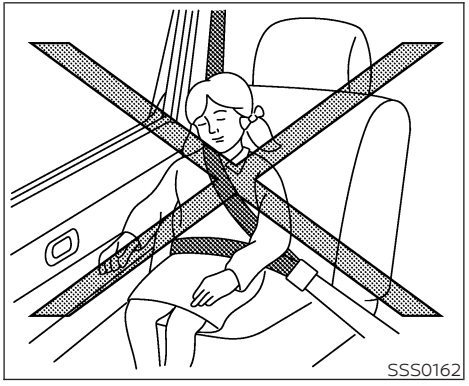

Do not lean against doors or windows.

⚠WARNING

- **The seat belts, the side air bags and curtain air bags are most effective when you are sitting well back and upright in the seat. The side air bag and curtain air bag inflate with great force. Do not allow anyone to place their hand, leg or face near the side air bag on the side of the seatback of the front seat or near the side roof rails. Do not allow anyone sitting in the front seats or rear outboard seats to extend their hand out of the window or lean against the door. Some examples of dangerous riding positions are shown in the previous illustrations.**

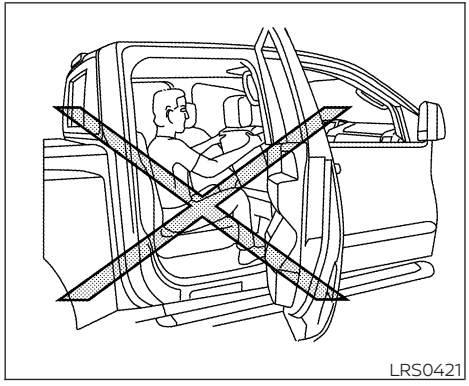
LRS0421

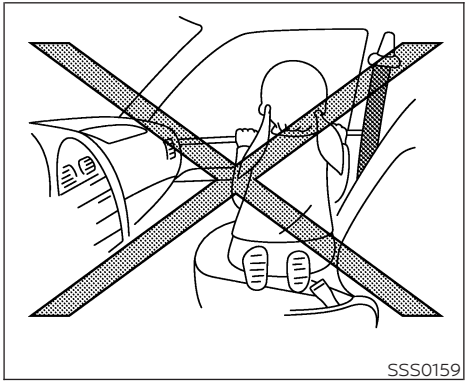
SSS0159

⚠ WARNING

- **When sitting in the rear seat, do not hold onto the seatback of the front seat. If the side air bag inflates, you may be seriously injured. Be especially careful with children, who should always be properly restrained. Some examples of dangerous riding positions are shown in the illustrations.**
- **Do not use seat covers on the front seatbacks. They may interfere with side air bag inflation.**

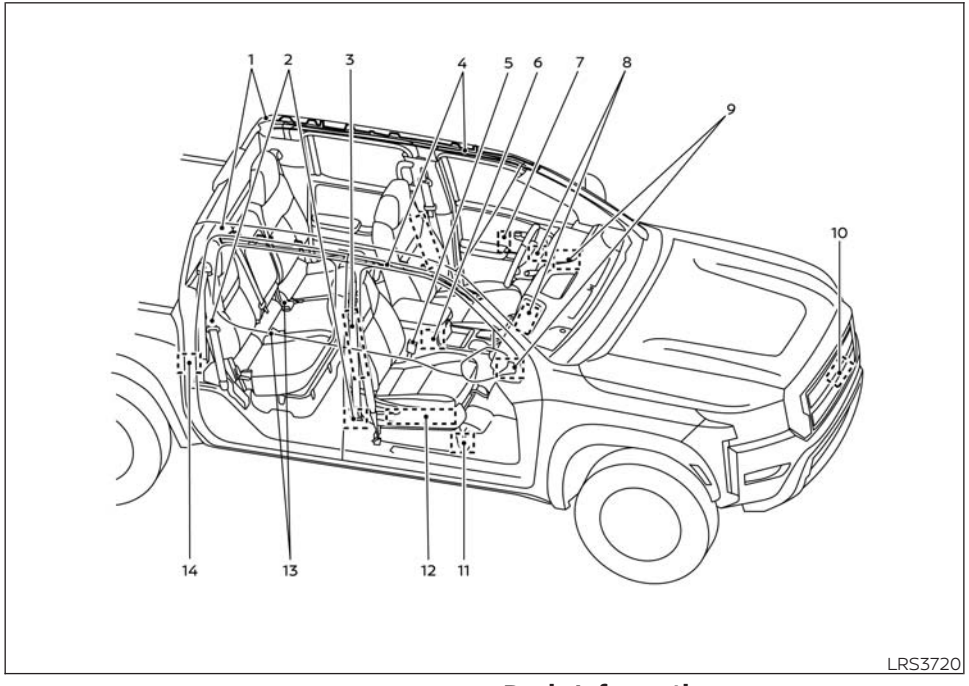

NISSAN Advanced Air Bag System (front seats)

Basic Information

1. Roof-mounted curtain side-impact and rollover supplemental air bag inflators
2. Seat belt with pretensioner(s) (front and rear outboard seats)
3. Front seat-mounted side-impact supplemental air bag module
4. Roof-mounted curtain side-impact and rollover supplemental air bags
5. Front seat belt buckle switches
6. Air bag Control Unit (ACU)
7. Front door satellite sensor (driver's side shown; passenger's side similar)
8. Supplemental front-impact air bag modules
9. Driver and front passenger supplemental knee air bags
10. Crash zone sensor
11. Occupant classification system control unit
12. Occupant classification sensor (weight sensors)
13. Rear seat belt buckle switches
14. Satellite sensor (passenger's side shown; driver's side similar) (if so equipped)

⚠ WARNING

To ensure proper operation of the passenger's NISSAN Advanced Air Bag System, please observe the following items.

- **Do not allow a passenger in the rear bench seats to push or pull on the seatback pocket.**
- **Do not place heavy loads heavier than 9.1 lbs. (4 kg) on the seatback, head restraint or in the seatback pocket.**
- **Make sure that there is nothing pressing against the rear of the seatback, such as a child restraint installed in the rear seat or an object stored on the floor.**
- **Make sure that there is no object placed under the front passenger seat.**
- **Make sure that there is no object placed between the seat cushion and center console or between the seat cushion and the door.**
- **If a forward-facing child restraint is installed in the front passenger seat, do not position the front passenger seat so the child restraint contacts the instrument panel. If the child restraint does contact the instrument panel, the system may determine the seat is occupied and the front passenger air bag and front passenger supplemental knee air bag may deploy in a collision. Also the front passenger air bag status light may not illuminate. For additional information, see "Child restraints" (P. 35).**
- **Confirm the operating condition with the front passenger air bag status light.**
- **If you notice that the front passenger air bag status light is not operating as described in this section, get the occupant classification system checked. It is recommended that you visit a NISSAN dealer for this service.**
- **Until you have confirmed with a dealer that your passenger seat occupant classification system is working properly, position the occupants in the rear seating positions.**
- **Do not position the front passenger seat so it contacts the rear seat. If the front seat does contact the rear seat, the air bag system may determine a sensor malfunction has occurred and the front passenger air bag status light may illuminate and the supplemental air bag warning light may flash.**

This vehicle is equipped with the NISSAN Advanced Air Bag System for the driver and front passenger seats. This system is designed to meet certification requirements under U.S. regulations. It is also permitted in Canada. **However, all of the information, cautions and warnings in this manual still apply and must be followed.**

The driver supplemental front-impact air bag is located in the center of the steering wheel. The front passenger supplemental front-impact air bag is mounted in the dashboard above the glove box. The front air bags are designed to inflate in higher severity frontal collisions, although they may inflate if the forces in another type of collision are similar to those of a higher severity frontal impact. They may not inflate in certain frontal collisions. Vehicle

damage (or lack of it) is not always an indication of proper front air bag system operation.

The NISSAN Advanced Air Bag System monitors information from the crash zone sensor and the Air bag Control Unit (ACU). Inflator operation is based on the severity of a collision and seat belt usage for the driver. For the front passenger, the occupant classification sensor is also monitored. Based on the information from the sensor, only one front air bag may inflate in a crash, depending on the crash severity. Additionally, the front passenger air bag and front passenger supplemental knee air bag may be automatically turned OFF under some conditions, depending on the weight detected on the front passenger seat and how the seat belt is used. If the front passenger air bag and front passenger supplemental knee air bag are OFF, the front passenger air bag status light will be illuminated (if the seat is unoccupied, the light will not be illuminated, but the air bag will be off). For additional information, see "Front passenger air bag and status light" (P. 90). One front air bag inflating does not indicate improper performance of the system.

If you have any questions about your air bag system, it is recommended that you visit a NISSAN dealer to obtain information about the system. If you are considering modification of your vehicle due to a disability, you may also contact NISSAN. Contact information is contained in the front of this Owner's Manual.

When a front air bag inflates, a fairly loud noise may be heard, followed by the release of smoke. This smoke is not harmful and does not indicate a fire. Care should be taken to not inhale it, as it may cause irritation and choking. Those with a history of a breathing condition should get fresh air promptly.

Front air bags, along with the use of seat belts, help to cushion the impact force on the face and chest of the front occupants. They can help save lives and reduce serious injuries. However, an inflating front air bag may cause facial abrasions or other injuries. Front air bags do not provide restraint to the lower body.

Even with NISSAN Advanced Air Bags, seat belts should be correctly worn and the driver and front passenger seated upright as far as practical away from the steering wheel or instrument panel. The front air bags inflate quickly in order to help protect the front occupants. Because of this, the force of the front air bag inflating can increase the risk of injury if the occupant is too close to, or is against, the front air bag module during inflation.

The front air bags deflate quickly after a collision.

The front air bags operate only when the ignition switch is in the ON position.

After placing the ignition switch in the ON position, the supplemental air bag warning light illuminates. The supplemental air bag warning light will turn off after about 7 seconds if the system is operational.

Front passenger air bag and status light

⚠WARNING

The front passenger air bag and front passenger supplemental knee air bag are designed to automatically turn OFF under some conditions. Read this section carefully to learn how it operates. Proper use of the seat, seat belt and child restraints is necessary for most effective protection. Failure to follow all instructions in this manual concerning the use of seats, seat belts and child restraints can increase the risk or severity of injury in an accident.

Status light

The front passenger air bag status light OFF is located near the climate controls. After the ignition switch is placed in the "ON" position, the front passenger air bag status light on the instrument panel illuminates for about 7 seconds and then turns off or remains illuminated depending on the front passenger seat occupied status. The light operates as follows:

Condition: Empty front passenger seat
• Passenger Air Bag Status Light OFF : ON (illuminated)
• Front Passenger Air Bag And Front Passenger Supplemental Knee Air Bag Status: INHIBITED
Condition: Bag or Child or Child Restraint or Small Adult in front passenger seat
• Passenger Air Bag Status Light OFF : ON (illuminated)
• Front Passenger Air Bag And Front Passenger Supplemental Knee Air Bag Status: INHIBITED
Condition: Adult in the front passenger seat
• Passenger Air Bag Status Light OFF : OFF (dark)
• Front Passenger Air Bag And Front Passenger Supplemental Knee Air Bag Status: ACTIVATED

Front passenger air bag

The front passenger air bag and front passenger supplemental knee air bag are designed to automatically turn OFF when the vehicle is operated under some conditions as described below in accordance with U.S. regulations. If the front passenger air bag and front passenger supplemental knee air bag are OFF it will not inflate in a crash. The driver air bag and other air bags in your vehicle are not part of this system.

The purpose of the regulation is to help reduce the risk of injury or death from an inflating air bag to certain front passenger seat occupants, such as children, by requiring the air bag to be automatically turned OFF. Certain sensors are used to meet the requirements.

The occupant classification sensor in this vehicle is a weight sensor. It is designed to detect an occupant and objects on the seat by weight. For example, if a child up to the approximate size and weight of a one year old is properly restrained in the front passenger seat, the NISSAN Advanced Air Bag System is designed to turn the front passenger air bag and front passenger supplemental knee air bag OFF. For a properly restrained child who is larger than the approximate size and weight of a one year old, the front passenger air bag and front passenger supplemental knee air bag may or may not be automatically turned OFF, depending on the size of the child and the type of child restraint being used. After installing the child restraint and positioning the child, place the ignition switch in the ON position: if the front passenger air bag status light is illuminated, the front passenger air bag and front passenger supplemental knee air bag are OFF. If the front passenger air bag status light is not illuminated, the air bag will inflate in a crash.

The front passenger seat belt sensors are designed to detect if the seat belt is buckled. Based on the weight on the seat detected by the occupant classification sensor, the NISSAN Advanced Air Bag System determines whether the front passenger air bag and front passenger supplemental knee air bag should be automatically turned OFF as required by the regulations.

Front passenger seat adult occupants who are properly seated and using the seat belt as outlined in this manual should not cause the front passenger air bag and front passenger supplemental knee air bag to be automatically turned OFF. For small adults it may be turned OFF, however, if the occupant does not sit in the seat properly (for example, by not sitting upright, by sitting on an edge of the seat, or by otherwise being out of position), this could cause the sensor to turn the front passenger air bag and front passenger supplemental knee air bag OFF. Always be sure to be seated and wearing the seat belt properly for the most effective protection by the seat belt and supplemental air bag.

NISSAN recommends that pre-teens and children be properly restrained in a rear seat. NISSAN also recommends that appropriate child restraints and booster seats be properly installed in a rear seat. If this is not possible, the occupant classification sensor is designed to operate as described above to turn the front passenger air bag and front passenger supplemental knee air bag OFF for specified child restraints as required by the regulations. Failing to properly secure child restraints and to use the ALR mode may allow the restraint to tip or move in a collision or sudden stop. This can also result in the front passenger air bag and front passenger supplemental knee air bag inflating in a crash instead of being OFF. For additional information, see "Child restraints" (P. 35).

If the front passenger seat is not occupied, the front passenger air bag and front passenger supplemental knee air bag are designed not to inflate in a crash. However, heavy objects placed on the seat could result in air bag inflation, because of the object's weight detected by the occupant classification sensor. Other conditions could also result in air bag inflation, such as if a child is standing on the seat, or if two children are on the seat, contrary to the instructions in this manual. Always be sure that you and all vehicle occupants are seated and restrained properly.

Using the front passenger air bag status light, you can monitor when the front passenger air bag and front passenger supplemental knee air bag are automatically turned OFF with the seat occupied.

If an adult occupant is in the seat but the front passenger air bag status light is illuminated (indicating that the air bag and front passenger supplemental knee air bag are OFF), it could be that the person is a small adult, or is not sitting on the seat properly or not using the seat belt properly.

If a child restraint must be used in the front seat, the front passenger air bag status light may or may not be illuminated, depending on the size of the child and the type of child restraint being used. If the air bag status light is not illuminated (indicating that the air bag might inflate in a crash), it could be that the child restraint or seat belt is not being used properly. Make sure that the child restraint is installed properly, the seat belt is used properly and the occupant is positioned properly. If the air bag status light is not illuminated, reposition the occupant or child restraint in a rear seat.

If the front passenger air bag status light will not illuminate even though you believe that the child restraint, the seat belts and the occupant are properly positioned, the system may be sensing an unoccupied seat (in which case the air bag is OFF). A NISSAN dealer can check that the system is OFF by using a special tool. However, until you have confirmed with a dealer that your air bag is working properly, reposition the occupant or child restraint in a rear seat.

The NISSAN Advanced Air Bag System and front passenger air bag status light will take a few seconds to register a change in the passenger seat status. For example, if a large adult who is sitting in the front passenger seat exits the vehicle, the front passenger air bag status light will go from OFF to ON for a few seconds and then to OFF. This is normal system operation and does not indicate a malfunction.

If a malfunction occurs in the front passenger air bag system, the supplemental air bag warning light , located in the meter and gauges area of the instrument panel, will blink. Have the system checked. It is recommended that you visit a NISSAN dealer for this service.

Normal operation

In order for the occupant classification sensor system to classify the front passenger based on weight, please follow the precautions and steps outlined below:

Precautions

- Make sure that there are no objects weighing over 9.1 lbs. (4 kg) hanging on the seat or placed in the seatback pocket.
- Make sure that a child restraint or other object is not pressing against the rear of the seatback.
- Make sure that a rear passenger is not pushing or pulling on the back of the front passenger seat.
- Make sure that the front passenger seat or seatback is not forced back against an object on the seat or floor behind it.
- Make sure that there is no object placed under the front passenger seat.

Steps

1. Adjust the seat as outlined in the "Seats" section of this manual. Sit upright, leaning against the seatback, and centered on the seat cushion with your feet comfortably extended to the floor.
2. Make sure there are no objects on your lap.
3. Fasten the seat belt as outlined in the "Seat belts" section of this manual.
4. Remain in this position for 30 seconds allowing the system to classify the front passenger before the vehicle is put into motion.
5. Ensure proper classification by checking the front passenger air bag status light.

NOTE:

This vehicle's occupant classification sensor system locks the classification during driving so it is important that you confirm that the front passenger is properly classified prior to driving. Also, the occupant classification sensor system may recalculate the weight of the occupant when the vehicle comes to a stop (i.e. stop light, stop sign, etc.), so front passenger seat occupants should continue to remain seated as outlined above.

Troubleshooting

If you think the front passenger air bag status light is incorrect:

If the light is ON with an adult occupying the front passenger seat:

- Occupant is a small adult — the air bag light is functioning as intended. The front passenger air bag and front passenger supplemental knee air bag are suppressed.

NOTE:
If the occupant is not a small adult, then this may be due to the following conditions that may be interfering with the weight sensors:

- Occupant is not sitting upright, leaning against the seatback, and centered on the seat cushion with his/her feet comfortably extended to the floor.
- A child restraint or other object pressing against the rear of the seatback.
- A rear passenger pushing or pulling on the back of the front passenger seat.
- Forcing the front seat or seatback against an object on the seat or floor behind it.
- An object placed under the front passenger seat.
- An object placed between the seat cushion and center console or between the seat cushion and the door.

If the vehicle is moving, please come to a stop when it is safe to do so. Check and correct any of the above conditions. Restart the vehicle and wait 1 minute.

NOTE:

A system check will be performed during which the front passenger air bag status light will remain lit for about 7 seconds initially.

If the light is still ON after this, the person should be advised not to ride in the front passenger seat and the vehicle should be checked as soon as possible. It is recommended that you visit a NISSAN dealer for this service.

If the light is OFF with a small adult, child or child restraint occupying the front passenger seat.

This may be due to the following conditions that may be interfering with the weight sensors:

- Small adult or child is not sitting upright, leaning against the seatback, and centered on the seat cushion with his/her feet comfortably extended to the floor.
- The child restraint is not properly installed, as outlined in the "Child restraints" section of this manual.
- An object weighing over 9 lbs. (4 kg) hanging on the seat or placed in the seatback pocket.
- A child restraint or other object pressing against the rear of the seatback.
- A rear passenger pushing or pulling on the back of the front passenger seat.
- Forcing the front seat or seatback against an object on the seat or floor behind it.
- An object placed under the front passenger seat.
- An object placed between the seat cushion and center console.

If the vehicle is moving, please come to a stop when it is safe to do so. Check and correct any of the above conditions. Restart the vehicle and wait 1 minute.

NOTE:

A system check will be performed during which the front passenger air bag status light will remain lit for about 7 seconds initially.

If the light is still OFF after this, the small adult, child or child restraint should be repositioned in the rear seat and the vehicle should be checked as soon as possible. It is recommended that you visit a NISSAN dealer for this service.

If the light is OFF with no front passenger and no objects on the front passenger seat, the vehicle should be checked. It is recommended that you visit a NISSAN dealer as soon as possible.

Other supplemental front-impact air bag precautions

⚠ WARNING

- **Do not place any objects on the steering wheel pad or on the instrument panel. Also, do not place any objects between any occupant and the steering wheel or instrument panel. Such objects may become dangerous projectiles and cause injury if the front air bags inflate.**
- **Immediately after inflation, several front air bag system components will be hot. Do not touch them; you may severely burn yourself.**
- **No unauthorized changes should be made to any components or wiring of the supplemental air bag system. This is to prevent accidental inflation of the supplemental air bag or damage to the supplemental air bag system.**
- **Do not make unauthorized changes to your vehicle's electrical system, suspension system or front end structure. This could affect proper operation of the front air bag system.**

- **Tampering with the front air bag system may result in serious personal injury. Tampering includes changes to the steering wheel and the instrument panel assembly by placing material over the steering wheel pad and above the instrument panel or by installing additional trim material around the air bag system.**
- **Removing or modifying the front passenger seat may affect the function of the air bag system and result in serious personal injury.**
- **Modifying or tampering with the front passenger seat may result in serious personal injury. For example, do not change the front seats by placing material on the seat cushion or by installing additional trim material, such as seat covers, on the seat that are not specifically designed to assure proper air bag operation. Additionally, do not stow any objects under the front passenger seat or the seat cushion and seatback. Such objects may interfere with the proper operation of the occupant classification sensor (weight sensor).**
- **No unauthorized changes should be made to any components or wiring of the seat belt system. This may affect the front air bag system. Tampering with the seat belt system may result in serious personal injury.**
- **It is recommended that you visit a NISSAN dealer for work on and around the front air bag. It is also recommended that you visit a NISSAN dealer for installation of electrical equipment. The Supplemental Restraint System (SRS) wiring harnesses* should not be modified or disconnected. Unauthorized electrical test equipment and probing devices should not be used on the air bag system.**
- **A cracked windshield should be replaced immediately by a qualified repair facility. A cracked windshield could affect the function of the supplemental air bag system.**

***The SRS wiring harness connectors are yellow and orange for easy identification.**

When selling your vehicle, we request that you inform the buyer about the front air bag system and guide the buyer to the appropriate sections in this Owner's Manual.

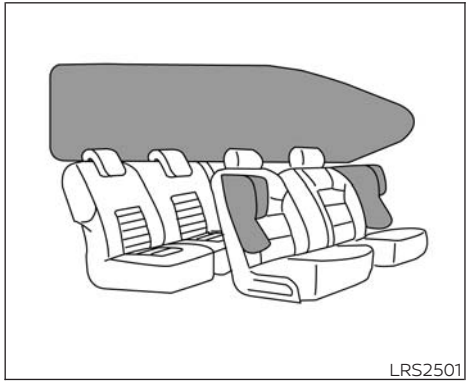

Front seat-mounted side-impact supplemental air bag and roof-mounted curtain side-impact and rollover supplemental air bag systems

The side air bags are located in the outside of the seatback of the front seats. The curtain air bags are located in the side roof rails. **All of the information, cautions and warnings in this manual apply and must be followed.** The side air bags and curtain air bags are designed to inflate in higher severity side collisions, although they may inflate if the forces in another type of collision are similar to those of a higher severity impact. They are designed to inflate on the side where the vehicle is impacted. They may not inflate in certain side collisions.

Curtain air bags are also designed to inflate in certain types of rollover collisions or near rollovers. As a result, certain vehicle movements (for example, during severe off-roading) may cause the curtain air bags to inflate.

Vehicle damage (or lack of it) is not always an indication of proper side air bag and curtain air bag operation.

When the side air bags and curtain air bags inflate, a fairly loud noise may be heard, followed by release of smoke. This smoke is not harmful and does not indicate a fire. Care should be taken not to inhale it, as it may cause irritation and choking. Those with a history of a breathing condition should get fresh air promptly.

Side air bags, along with the use of seat belts, help to cushion the impact force on the chest and pelvic area of the front occupants. Curtain air bags help to cushion the impact force to the head of occupants in the front and rear outboard seating positions. They can help save lives and reduce serious injuries. However, an inflating side air bag or curtain air bag may cause abrasions or other injuries. Side air bags and curtain air bags do not provide restraint to the lower body.

The seat belts should be correctly worn and the driver and passenger seated upright as far as practical away from the side air bag. Rear seat passengers should be seated as far away as practical from the door finishers and side roof rails. The side air bags and curtain air bags inflate quickly in order to help protect the occupants. Because of this, the force of the side air bag and curtain air bag inflating can increase the risk of injury if the occupant is too close to, or is against, these air bag modules during inflation. The side air bag will deflate quickly after the collision is over.

The curtain air bags will remain inflated for a short time.

The side air bags and curtain air bags operate only when the ignition switch is in the ON position.

After placing the ignition switch in the ON position, the supplemental air bag warning light illuminates. The supplemental air bag warning light will turn off after about 7 seconds if the system is operational.

⚠ WARNING

- **Do not place any objects near the seatback of the front seats. Also, do not place any objects (an umbrella, bag, etc.) between the front door finisher and the front seat. Such objects may become dangerous projectiles and cause injury if a side air bag inflates.**
- **Right after inflation, several side air bag and curtain air bag system components will be hot. Do not touch them; you may severely burn yourself.**
- **No unauthorized changes should be made to any components or wiring of the side air bag and curtain air bag systems. This is to prevent damage to or accidental inflation of the side air bag and curtain air bag systems.**
- **Do not make unauthorized changes to your vehicle's electrical system, suspension system or side panel. This could affect proper operation of the curtain air bag systems.**
- **Tampering with the side air bag system may result in serious personal injury. For example, do not change the front seats by placing material near the seatbacks or by installing additional trim material, such as seat covers, around the side air bag.**
- **It is recommended that you visit a NISSAN dealer for work on and around the side air bag and curtain air bag. It is also recommended that you visit a NISSAN dealer for installation of electrical equipment. The SRS wiring harnesses* should not be modified or disconnected. Unauthorized electrical test equipment and probing devices should not be used on the side air bag or curtain air bag systems.**

*** The SRS wiring harness or connectors are yellow or orange for easy identification.**

When selling your vehicle, we request that you inform the buyer about the side air bag and curtain air bag systems and guide the buyer to the appropriate sections in this Owner's Manual.

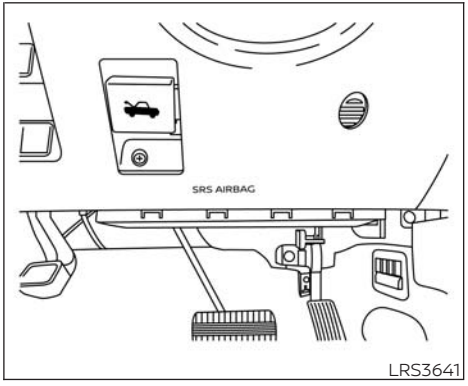

Driver's side

Driver and front passenger supplemental knee air bag

The knee air bag is located below the steering column on the driver's side, and in the knee bolster on the front passenger's side. **All of the information, cautions and warnings in this manual apply and must be followed.** The knee air bag is designed to inflate in higher severity frontal collisions, although it may inflate if the forces in another type of collision are similar to those of a higher severity frontal impact. It may not inflate in certain collisions.

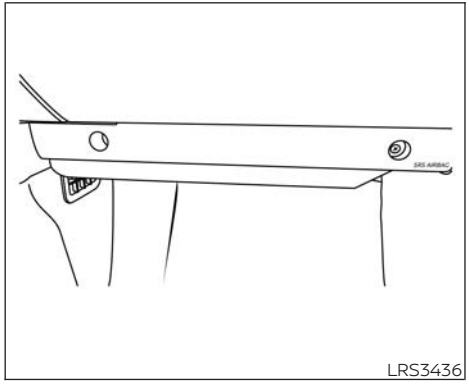

Passenger's side

Vehicle damage (or lack of it) is not always an indication of proper knee air bag operation.

When the knee air bag inflates, a fairly loud noise may be heard, followed by release of smoke. This smoke is not harmful and does not indicate a fire. Care should be taken not to inhale it, as it may cause irritation and choking. Those with a history of a breathing condition should get fresh air promptly.

The knee air bag helps to cushion the impact force on the knees of the driver and passenger. It can help reduce serious injuries. However, an inflating knee air bag may cause abrasions or other injuries. The knee air bag provides restraint to the lower body.

The knee air bag inflates quickly in order to help protect the occupants. Because of this, the force of the knee air bag inflating can increase the risk of injury if the occupant is too close to, or is against, this air bag module during inflation. The knee air bag will deflate quickly after the collision is over OR the knee air bag will remain inflated for a short time.

The knee air bag operates only when the ignition switch is placed in the ON position.

After placing the ignition switch in the ON position, the supplemental air bag warning light illuminates. The supplemental air bag warning light will turn off after about 7 seconds if the system is operational.

⚠ WARNING

- **Do not place any objects between the knee bolster and the driver's or passenger's seat. Such objects may become dangerous projectiles and cause injury if a knee air bag inflates.**
- **Right after inflation, the knee air bag system components will be hot. Do not touch them; you may severely burn yourself.**
- **No unauthorized changes should be made to any components or wiring of the knee air bag system. This is to prevent damage to or accidental inflation of the knee air bag system.**
- **Do not make unauthorized changes to your vehicle's electrical system or suspension system. This could affect proper operation of the knee air bag system.**
- **Tampering with the knee air bag system may result in serious personal injury. For example, do not change the driver or passenger knee bolster or install additional trim material around the knee air bag.**

- **It is recommended that you visit a NISSAN dealer for work on and around the knee air bag. It is also recommended that you visit a NISSAN dealer for installation of electrical equipment. The SRS wiring harnesses* should not be modified or disconnected. Unauthorized electrical test equipment and probing devices should not be used on the knee air bag system.**

***The SRS wiring harness or connectors are yellow or orange for easy identification.**

When selling your vehicle, we request that you inform the buyer about the knee air bag system and guide the buyer to the appropriate sections in this manual.

Seat belt with pretensioner(s) (front and rear outboard seats)

⚠ WARNING

- **The pretensioner(s) cannot be reused after activation. They must be replaced together with the retractor and buckle as a unit.**
- **If the vehicle becomes involved in a collision but pretensioner(s) are not activated, be sure to have the pretensioner system checked and, if necessary, replaced. It is recommended that you visit a NISSAN dealer for this service.**
- **No unauthorized changes should be made to any components or wiring of the pretensioner system. This is to prevent damage to or accidental activation of the pretensioner(s). Tampering with the pretensioner system may result in serious personal injury.**
- **It is recommended that you visit a NISSAN dealer for work on and around the pretensioner system. It is also recommended that you visit a NISSAN dealer for installation of electrical equipment. Unauthorized electrical test equipment and probing devices should not be used on the pretensioner system.**
- **If you need to dispose of the pretensioner(s) or scrap the vehicle, it is recommended that you visit a NISSAN dealer for this service. Incorrect disposal procedures could cause personal injury.**

The pretensioner system may activate with the supplemental air bag system in certain types of collisions. Working with the seat belt retractor, the pretensioner(s) help tighten the seat belt when the vehicle becomes involved in certain types of collisions, helping to restrain front seat occupants.

The pretensioner(s) are encased within the seat belt retractor. These seat belts are used the same way as conventional seat belts.

When pretensioner(s) activate, smoke is released and a loud noise may be heard. This smoke is not harmful and does not indicate a fire. Care should be taken not to inhale it, as it may cause irritation and choking. Those with a history of a breathing condition should get fresh air promptly.

After the pretensioner(s') activation, load limiters (if so equipped) allow the seat belt to release webbing (if necessary) to reduce forces against the chest.

The supplemental air bag warning light is used to indicate malfunctions in the pretensioner system. For additional information, see "Supplemental air bag warning light" (P. 100). If the operation of the supplemental air bag warning light indicates

there is a malfunction, have the system checked. It is recommended that you visit a NISSAN dealer for this service.

When selling your vehicle, we request that you inform the buyer about the pretensioner system and guide the buyer to the appropriate sections in this Owner's Manual.

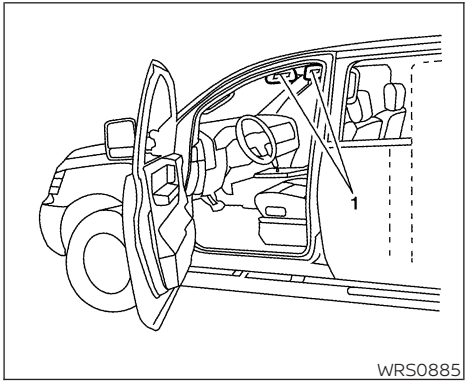

WRS0885

1. SRS Air bag warning labels
   The warning labels are located on the surface of the sun visor.

SUPPLEMENTAL AIR BAG WARNING LABELS

Warning labels about the supplemental front-impact air bag system are placed in the vehicle as shown in the illustration.

⚠WARNING

Do not use a rear-facing child restraint on a seat protected by an air bag in front of it. If the air bag deploys, it may cause serious injury or death.

LRS0100

SUPPLEMENTAL AIR BAG WARNING LIGHT

Basic Information

The supplemental air bag warning light, displaying in the instrument panel, monitors the circuits for the air bag systems, pretensioner(s) and all related wiring.

When the ignition switch is placed in the ON position, the supplemental air bag warning light illuminates for about 7 seconds and then turns off. This means the system is operational.

If any of the following conditions occur, the front air bag, side air bag, curtain air bag and pretensioner systems need servicing:

- The supplemental air bag warning light remains on after approximately 7 seconds.
- The supplemental air bag warning light flashes intermittently.
- The supplemental air bag warning light does not come on at all.

Under these conditions, the front air bag, side air bag, curtain air bag or pretensioner systems may not operate properly. They must be checked and repaired. It is recommended that you visit a NISSAN dealer for this service.

⚠ WARNING

If the supplemental air bag warning light is on, it could mean that the front air bag, side air bag, curtain air bag and/or pretensioner systems will not operate in an accident. To help avoid injury to yourself or others, have your vehicle checked as soon as possible. It is recommended that you visit a NISSAN dealer for this service.

Repair and replacement procedure

The front air bags, side air bags, curtain air bags and pretensioner(s) are designed to inflate on a one-time-only basis. As a reminder, unless it is damaged, the supplemental air bag warning light remains illuminated after inflation has occurred. These systems should be repaired and/or replaced as soon as possible. It is recommended that you visit a NISSAN dealer for this service.

When maintenance work is required on the vehicle, the front air bags, side air bags, curtain air bags, pretensioner(s) and related parts should be pointed out to the person performing the maintenance. The ignition switch should always be placed in the LOCK position when working under the hood or inside the vehicle.

⚠ WARNING

- **Once a front air bag, side air bag, or curtain air bag has inflated, the air bag module will not function again and must be replaced. Additionally, the activated pretensioner(s) must also be replaced. The air bag module and pretensioner(s) should be replaced. It is recommended that you visit a NISSAN dealer for this service. However, the air bag module and pretensioner(s) cannot be repaired.**
- **The front air bag, side air bag, curtain air bag systems and the pretensioner system should be inspected if there is any damage to the front end or side portion of the vehicle. It is recommended that you visit a NISSAN dealer for this service.**
- **If you need to dispose of the supplemental air bag or pretensioner systems or scrap the vehicle, it is recommended that you visit a NISSAN dealer. Incorrect disposal procedures could cause personal injury.**
- **If there is an impact to your vehicle from any direction, your Occupant Classification Sensor (OCS) should be checked to verify it is still functioning correctly. It is recommended that you visit a NISSAN dealer for this service. The OCS should be checked even if no air bags deploy as a result of the impact. Failure to verify proper OCS function may result in an improper air bag deployment resulting in injury or death.**

MEMO

2 Instruments and controls

Instrument panel 106
Meters and gauges 107
Basic Information 107
Speedometer and odometer 108
Tachometer 109
Engine coolant temperature gauge 109
Fuel gauge 110
Distance To Empty (DTE) 110
Auxiliary gauges (if so equipped) 111
Off-road and 4-Wheel Drive (4WD) monitor (if so equipped) 112
Eco Drive Report (if so equipped) 113
Warning lights, indicator lights and audible reminders 114
Warning lights, indicator lights and audible reminders 114
Checking lights 114
Warning/Indicator lights (red) 114
Warning/Indicator lights (yellow) 118
Warning/Indicator lights (other) 122
Audible reminders 123
Vehicle information display 124
Basic Information 124
How to use the vehicle information display 124
Startup display 125
Trip computer 125
Settings 130
Vehicle information display warnings and indicators 137
Security systems 144
Basic Information 144
Vehicle security system (if so equipped) 145
NISSAN Vehicle Immobilizer System 146
Wiper and washer switch 147
Switch operation 147
Outside mirror defroster switch (if so equipped) 148
Headlight and turn signal switch 148
Headlight control switch 148
Daytime Running Lights (DRL) system (Type A) (if so equipped) 153
LED Daytime Running Lights (DRL) system (Type B) (if so equipped) 153
Instrument brightness control 154
Turn signal switch 154
Fog light switch (if so equipped) 155
Horn 155
Cargo lamp switch 156
Heated seat switches (if so equipped) 156
Heated steering wheel switch (if so equipped) . . . 157

Vehicle Dynamic Control (VDC) OFF switch 158
Hill descent control switch (if so equipped) 158
Warning systems switch 160
Electronic locking rear differential (E-Lock) system switch (if so equipped) 160
Power inverter switch (if so equipped) 161
Parking Aids system switch (if so equipped) 162
Tow mode switch (if so equipped) 163
Emergency Call (SOS) button (if so equipped) 163
Emergency support 163
USB charging ports (if so equipped) 165
Wireless charger (if so equipped) 166
Basic Information 166
Rear Door Alert 168
Power outlets 169
12v Outlets 169
120v outlets (if so equipped) 170
Extended storage switch 172
Storage 173
Front-door pockets 173
Rear-door pockets 173
Seatback pocket 174
Under-seat storage bins (if so equipped) 175
Storage trays 176
Glove box 177
Console box 177
Overhead sunglasses storage (if so equipped) 178
Cup holders 178
Coat hooks (if so equipped) 180
Cargo Carrier (if so equipped) 180
Windows 181
Power windows 181
Rear sliding window (if so equipped) 183
Moonroof (if so equipped) 184
Power moonroof 184
Interior lights 186
Basic Information 186
Map lights 186
Cargo light 187
HomeLink® Universal Transceiver (if so equipped) 187
Basic Information 187
Programming HomeLink® 188

Programming HomeLink® for Canadian customers and gate openers 190
Operating the HomeLink® Universal Transceiver 190
Programming trouble-shooting 191
Clearing the programmed information 191
Reprogramming a single HomeLink® button 191
If your vehicle is stolen 192

INSTRUMENT PANEL

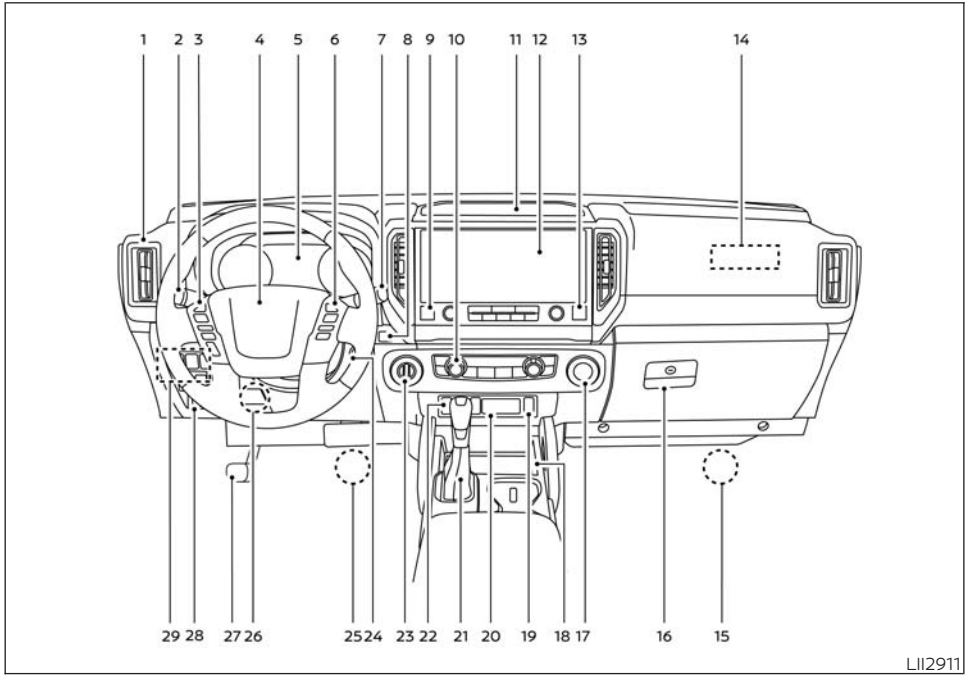

1. Vents (P. 252)
2. Headlight/fog lights (if so equipped)/ turn signal switch (P. 148, 155)
3. Bluetooth® Hands-Free Phone System (P. 227)
   Audio system controls (P. 227)
4. Driver supplemental air bag (P. 96)
   Horn (P. 155)
5. Meters and gauges (P. 107)
   Warning and indicator lights (P. 114)
   Vehicle information display (P. 124)
6. Intelligent cruise control (ICC) switches (P. 319)
7. Wiper and washer switch (P. 147)
8. Idling stop OFF switch (P. 402)
9. Hazard warning flasher switch (P. 406)
10. Climate controls (P. 252, 261)
    Outside mirror defroster switch (if so equipped) (P. 148)
11. Storage (P. 173)
12. Audio system (P. 227)
13. Front passenger air bag status light (P. 90)
14. Front passenger supplemental air bag (P. 96)
15. Front passenger supplemental knee air bag (P. 97)
16. Glove box (P. 177)
17. Power outlet (P. 169)
18. Storage (P. 173)
19. Heated seats (if so equipped) (P. 156)
20. USB connection port (P. 227)
    AUX input (if so equipped) (P. 227)
21. Shift lever (P. 289)

22. Heated steering wheel switch (if so equipped) (P. 157)
    Parking Aids system switch (if so equipped) (P. 162)
23. 4WD shift switch (if so equipped) (P. 379)
24. Push-button ignition switch (P. 282)
25. Driver supplemental knee air bag (P. 97)
26. Tilt and telescopic steering wheel control (P. 216)
27. Parking brake (P. 293)
28. Hood release (P. 213)
29. Cargo lamp switch (P. 156)
    Electronic locking rear differential (E-Lock) system switch (if so equipped) (P. 160)
    Hill descent control switch (if so equipped) (P. 158)
    Power inverter switch (if so equipped) (P. 161)
    Tow mode switch (if so equipped) (P. 163)
    Warning systems switch (P. 160)
    Vehicle Dynamic Control (VDC) OFF switch (P. 158)

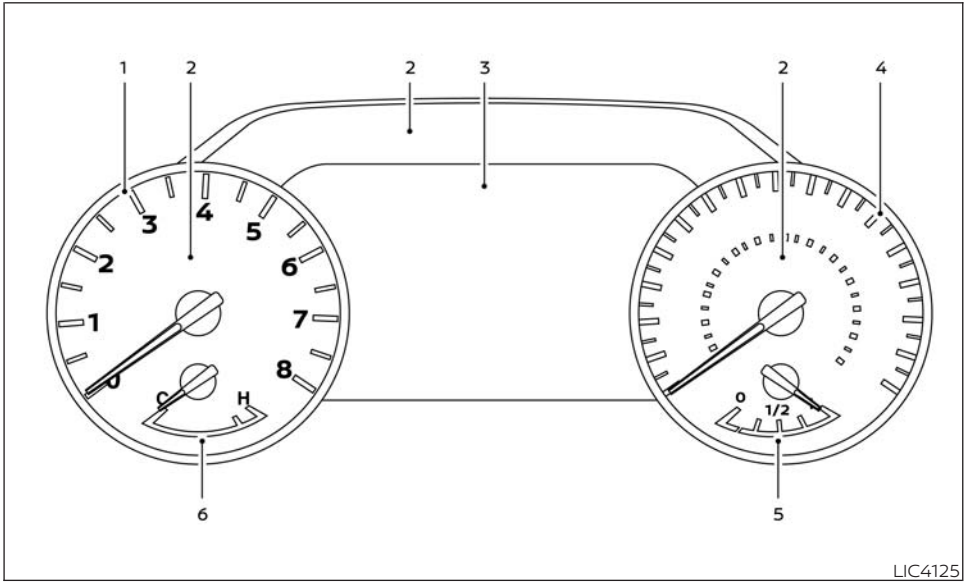

BASIC INFORMATION

1. Tachometer
2. Warning and indicator lights
3. Vehicle information display
   Odometer
   Outside temperature display
4. Speedometer
5. Fuel gauge
6. Engine coolant temperature gauge

SPEEDOMETER AND ODOMETER

Basic Information

This vehicle is equipped with a speedometer and odometer. The speedometer is located on the right side of the meter cluster. The odometer is located in the vehicle information display to the left of the speedometer and can be accessed with the vehicle in the ON position.

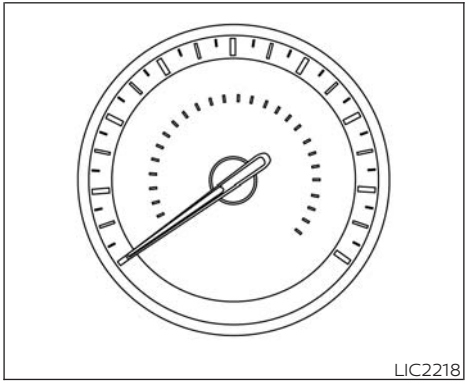

Speedometer

The speedometer indicates the vehicle speed.

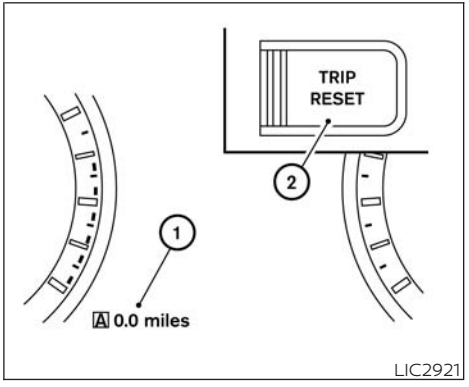

Odometer/Twin trip odometer

The odometer and the twin trip odometer ① are displayed in the vehicle information display when the ignition switch is placed in the ON position.

The odometer records the total distance the vehicle has been driven.

The twin trip odometer records the distance of individual trips.

Changing the display:

Push the TRIP RESET switch ② on the left side of the instrument panel to change the display as follows:

ODO → Trip **A** → Trip **B** → ODO

Resetting the trip odometer:

Pushing the TRIP RESET switch ② for about 2 seconds resets the currently displayed trip odometer to zero.

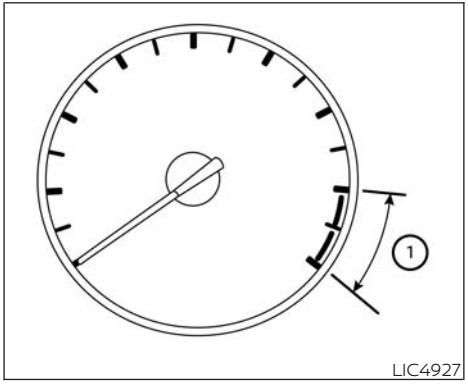

TACHOMETER

The tachometer indicates engine speed in revolutions per minute (rpm). Do not rev the engine into the red zone ①.

⚠ CAUTION

When engine speed approaches the red zone, reduce engine speed. Operating the engine in the red zone may cause serious engine damage.

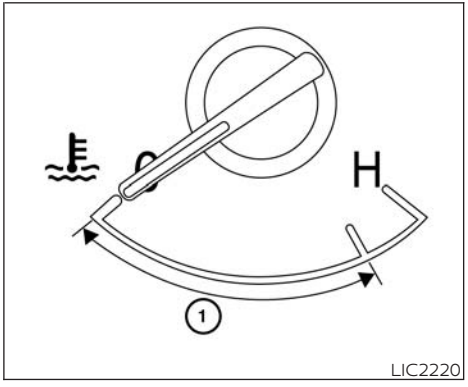

ENGINE COOLANT TEMPERATURE GAUGE

The gauge indicates the engine coolant temperature. The engine coolant temperature is within the normal range ① when the gauge needle points within the zone shown in the illustration.

The engine coolant temperature varies with the outside air temperature and driving conditions.

⚠ CAUTION

If the gauge indicates coolant temperature near the hot (H) end of the normal range, reduce vehicle speed to decrease temperature. If the gauge is over the normal range, stop the vehicle as soon as safely possible. If the engine is overheated, continued operation of the vehicle may seriously damage the engine. For additional information, see "If your vehicle overheats" (P. 417) for immediate action required.

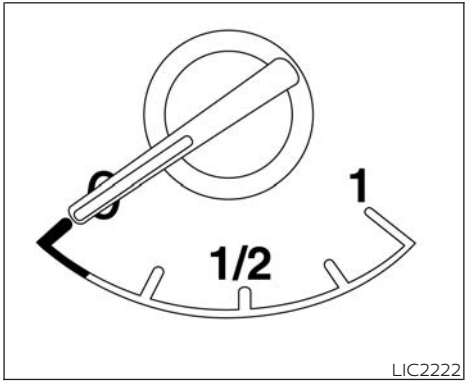

FUEL GAUGE

The gauge indicates the **approximate** fuel level in the tank.

The gauge may move slightly during braking, turning, acceleration, or going up or down hills.

The gauge needle returns to 0 (Empty) after the ignition switch is placed in the OFF position.

The low fuel warning light comes on when the amount of fuel in the tank is getting low.

Refill the fuel tank before the gauge registers 0 (Empty).

The ⛽ indicates that the fuel-filler door is located on the driver's side of the vehicle.

⚠ CAUTION

- **If the vehicle runs out of fuel, the Malfunction Indicator Light (MIL) may come on. Refuel as soon as possible. After a few driving trips, the light should turn off. If the light remains on after a few driving trips, have the vehicle inspected. It is recommended that you visit a NISSAN dealer for this service.**
- **For additional information, see "Malfunction Indicator Light (MIL)" (P. 121) .**

DISTANCE TO EMPTY (DTE)

Displays the estimated distance the vehicle can be driven before refueling. The value is calculated based on recent fuel economy, the amount of fuel remaining in the fuel tank, and the actual fuel consumption.

Changes in driving patterns or conditions can cause the DTE value to vary. As a result, the value displayed may differ from the actual distance that can be driven.

DTE display will change to "---" when the fuel level in the tank is getting low, prior to the fuel gauge reaching 0 (Empty).

NOTE:

- **The DTE value after refill is estimated based on recent fuel economy and amount of fuel added.**
- **If a small amount of fuel is added, or the ignition is on during refueling, the display may not be updated.**
- **Conditions that affect the fuel economy will also affect the estimated DTE value (city/highway driving, idle time, remote start time, terrain, seasonal weather, added vehicle weight, added deflectors, roof racks, etc.).**

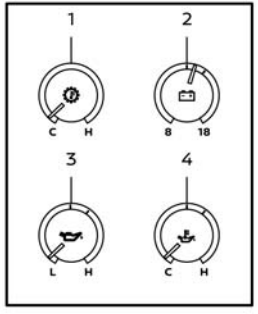

LIC4328

AUXILIARY GAUGES (if so equipped)

Basic Information

1. Automatic Transmission fluid temperature gauge
2. Voltmeter
3. Engine oil pressure gauge
4. Engine oil temperature gauge

Automatic Transmission fluid temperature gauge

This gauge indicates the temperature of the automatic transmission fluid.

⚠ CAUTION

- **This gauge is not designed to indicate low automatic transmission fluid level. Use the dipstick to check the fluid level. For additional information, see "Automatic Transmission Fluid (ATF)" (P. 501).**
- **If the gauge indicates automatic transmission fluid temperature over the normal range, stop the vehicle as soon as safely possible. It is recommended that you have the vehicle checked by a NISSAN dealer. Continued operation of the vehicle may seriously damage the transmission.**

Voltmeter

When the ignition switch is placed in the ON position, the voltmeter indicates the battery voltage. When the engine is running, it indicates the generator voltage.

While cranking the engine, the volts drop below the normal range. If the range is not within the normal range (11 – 15 volts) while the engine is running, it may indicate that the charging system is not functioning properly. Have the system checked. It is recommended that you visit a NISSAN dealer for this service.

Engine oil pressure gauge

The gauge indicates the engine lubrication system oil pressure while the engine is running. The bar should be in the middle of the gauge when the engine is running.

⚠ CAUTION

- **This gauge is not designed to indicate low engine oil level. Use the dipstick to check the oil level. For additional information, see "Engine oil" (P. 436).**
- **If the gauge needle does not move with the proper amount of engine oil, it is recommended that you have the vehicle checked by a NISSAN dealer. Continued vehicle operation in such a condition could cause serious damage to the engine.**

Engine oil temperature gauge

This gauge measures the temperature of the engine oil.

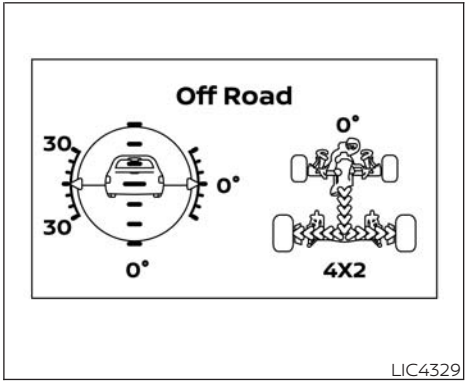

OFF-ROAD AND 4-WHEEL DRIVE (4WD) MONITOR (if so equipped)

The off-road and 4WD monitor displays the various conditions of the vehicle.

The Pitch and Roll Gauge (left) indicates the angle of the vehicle position left, right, up or down. The value will be displayed while the vehicle graphic will rotate to indicate vehicle condition: left, right, up or down.

The Tire Angle & 4WD Gauge (right) indicates the angle of the tires based on turning of the steering wheel and 4WD status. The graphic image will show the actual vehicle tire position while the angle is to be displayed above as reference. The 4WD status is displayed below.

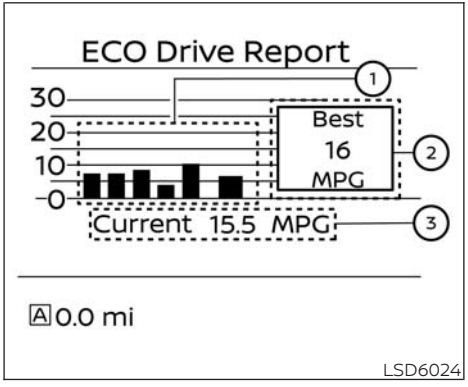

ECO DRIVE REPORT (if so equipped)

When the ignition switch is in the OFF position, the ECO management display appears.

① Previous 5 times (History)

② Current fuel economy

③ Best fuel economy

The result of ECO evaluation is displayed 30 seconds after the ignition switch is placed in the ON position and the vehicle is driven at least 1/3 miles (500 meters).

① The average fuel economy for the previous 5 times will be displayed.

② The average fuel economy since the last reset will be displayed.

③ The best fuel economy of the past history will be displayed.

The ECO Drive Report can be set to be ON or OFF.

WARNING LIGHTS, INDICATOR LIGHTS AND AUDIBLE REMINDERS

Warning & Indicator Lights (Red)

Warning & Indicator Lights (Yellow)

Warning & Indicator Lights (Other)

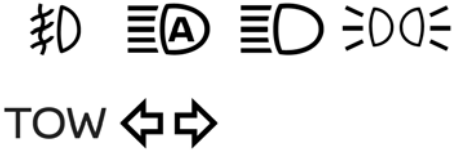

CHECKING LIGHTS

With all doors closed, apply the parking brake, fasten the seat belts and place the ignition switch in the ON position without starting the engine. The following lights (if so equipped) will come on:

, BRAKE or , , , .

The following lights (if so equipped) will come on briefly and then go off:

, , , , , , DIFF LOCK, ATP, AT CHECK, , or ABS

If any light does not come on or operate in a way other than described, it may indicate a burned-out bulb and/or a system malfunction. Have the system checked. It is recommended that you visit a NISSAN dealer for this service.

Some indicators and warnings are also displayed on the vehicle information display between the speedometer and tachometer. For additional information, see "Vehicle information display" (P. 124).

WARNING/INDICATOR LIGHTS (red)

Basic Information

For additional information, see "Vehicle information display" (P. 124).

Automatic Transmission Park warning light (4x4 model)

⚠ WARNING

- **If the ATP light is on, this indicates that the automatic transmission P (Park) position will not function and the transfer case is in N (Neutral).**
- **When parking, always make sure that the 4WD shift indicator light illuminates and the parking brake is set. Failure to engage the transfer position in 2WD, 4H or 4LO could result in the vehicle moving unexpectedly, resulting in serious personal injury or property damage.**

- **Shift the 4WD switch into the 2WD, 4H or 4LO position again to turn off the ATP warning light when the shift lever is in the P (Park) position and the ATP warning light is on. (Before shifting the 4WD switch into the 4LO position, move the shift lever into the N (Neutral) position once, shift the shift lever into P (Park) again and make sure the ATP warning light is off.)**

If the 4WD mode indicator is off or the ATP warning light is on, this indicates that the automatic transmission P (Park) position will not function and could result in the vehicle moving unexpectedly, causing serious personal injury or property damage. Always set the parking brake. For additional information, see "Using 4-Wheel Drive (4WD) (P. 374).

This light indicates that the automatic transmission parking function is not engaged. If the transfer control is not secured in any drive position while the shift lever is in the P (Park) position, the transmission will disengage and the drive wheels will not lock.

Brake warning light

Brake warning light

BRAKE OR

This light functions for both the parking brake and the foot brake systems.

Parking brake indicator

When the ignition switch is placed in the ON position, the light comes on when the parking brake is applied.

Low brake fluid warning light

When the ignition switch is placed in the ON position, the light warns of a low brake fluid level. If the light comes on while the engine is running with the parking brake not applied, stop the vehicle and perform the following:

1. Check the brake fluid level. Add brake fluid as necessary. For additional information, see "Brake fluid" (P. 443).
2. If the brake fluid level is correct, have the warning system checked. It is recommended that you visit a NISSAN dealer for this service.

WARNING

- **Your brake system may not be working properly if the warning light is on. Driving could be dangerous. If you judge it to be safe, drive carefully to the nearest service station for repairs. Otherwise, have your vehicle towed because driving it could be dangerous.**
- **Pressing the brake pedal with the engine stopped and/or a low brake fluid level may increase your stopping distance and braking will require greater pedal effort as well as pedal travel.**
- **If the brake fluid level is below the MINIMUM or MIN mark on the brake fluid reservoir, do not drive until the brake system has been checked. It is recommended that you visit a NISSAN dealer for this service.**

Charge warning light

If this light comes on while the engine is running, it may indicate the charging system is not functioning properly. Turn the engine off and check the generator belt. If the belt is loose, broken, or missing or if the light remains on, have the system checked. It is recommended that you visit a NISSAN dealer for this service.

⚠CAUTION

- **Do not ground electrical accessories directly to the battery terminal. Doing so will bypass the variable voltage control system and the vehicle battery may not charge completely. For additional information, see "Variable voltage control system" (P. 447).**
- **Do not continue driving if the generator belt is loose, broken or missing.**

Electric shift control system warning light

This light illuminates when a malfunction occurs in the electric shift control system. When the master warning light illuminates, the chime sounds and the following message is displayed in the vehicle information display: "When parked apply parking brake".

When the ignition is placed in the OFF position, the chime sounds continuously. Ensure the parking brake is applied

Have the system checked. It is recommended that you visit a NISSAN dealer for this service.

Engine oil pressure warning light

This light warns of low engine oil pressure. If the light flickers or comes on during normal driving, pull off the road in a safe area, stop the engine **immediately,** and call a NISSAN dealer or other authorized repair shop.

The engine oil pressure warning light is not designed to indicate a low oil level. Use the dipstick to check the oil level. For additional information, see "Engine oil" (P. 436).

⚠CAUTION

Running the engine with the engine oil pressure warning light on could cause serious damage to the engine almost immediately. Such damage is not covered by the NISSAN New Vehicle Limited Warranty. Turn off the engine as soon as it is safe to do so.

Master warning light

This light comes on when various vehicle information display warnings appear.

- Parking brake release warning
- Transmission system warning

Seat belt warning light and chime

- The light and chime remind you to fasten the seat belts.
- The seat belt warning light will illuminate when the ignition switch is pushed to the ON position if the driver's seat belt is not fastened, or if the front passenger seat belt is not fastened when occupied.
- The seat belt warning light will also illuminate if a rear passenger seat belt is changed from fastened to unfastened.
- If the driver's seat belt is not fastened when the ignition switch is pushed to the ON position, the chime will sound shortly.
- If the vehicle is driven above 9 mph (15 km/h) in the conditions that illuminate the seat belt warning light, the lamp will begin to blink and the chime will sound for over one minute, or until the seat belt is fastened again.

NOTE:

- **The warning light and/or chime may activate if an object is placed in the unoccupied front passenger seat. In this case, please remove the object from the front passenger seat.**
- **The warning light and/or chime may activate if any seat belt is unfastened before the vehicle comes to a complete stop. Please remain fastened until the vehicle has come to a complete stop.**

Security indicator light

This light blinks when the ignition switch is in the OFF, LOCK or ACC position. This function indicates the security systems equipped on the vehicle are operational.

For additional information, see "Security systems" (P. 144).

Supplemental air bag warning light

When the ignition switch is in the ON position, the supplemental air bag warning light illuminates for about 7 seconds and then turns off. This means the system is operational.

If any of the following conditions occur, the front air bag, side air bag, curtain air bag, and pretensioner systems need servicing:

- The supplemental air bag warning light remains on after approximately 7 seconds.
- The supplemental air bag warning light flashes intermittently.
- The supplemental air bag warning light does not come on at all.

It is recommended that you visit a NISSAN dealer for these services.

Unless checked and repaired, the supplemental restraint system (air bag system) and/or the pretensioners may not function properly. For additional information, see "Supplemental Restraint System (SRS)" (P. 79).

⚠ WARNING

If the supplemental air bag warning light is on, it could mean that the front air bag, side air bag, curtain air bag systems, and/or pretensioner systems will not operate in an accident. To help avoid injury to yourself or others, have your vehicle checked as soon as possible. It is recommended that you visit a NISSAN dealer for this service.

WARNING/INDICATOR LIGHTS (yellow)

Basic Information

For additional information on warnings and indicators, see "Vehicle information display" (P. 124).

Anti-lock Braking System (ABS) warning light

ABS OR

When the ignition switch is placed in the ON position, the ABS warning light illuminates and then turns off. This indicates the ABS is operational.

If the ABS warning light illuminates while the engine is running or while driving, it may indicate the ABS is not functioning properly. Have the system checked. It is recommended that you visit a NISSAN dealer for this service.

If an ABS malfunction occurs, the anti-lock function is turned off. The brake system then operates normally but without anti-lock assistance. For additional information, see "Brake system" (P. 384).

Automatic Emergency Braking (AEB) with Pedestrian Detection system warning light

This light comes on when the ignition switch is placed in the ON position. It turns off after the engine is started.

This light illuminates when the AEB with Pedestrian Detection system is set to OFF in the vehicle information display.

If the light blinks or illuminates when the AEB with Pedestrian Detection system is on, it may indicate that the system is unavailable. For additional information, see "Automatic Emergency Braking (AEB) with Pedestrian Detection" (P. 347).

Automatic Transmission check warning light

AT
CHECK

When the ignition switch is placed in the ON position, the light comes on for about 2 seconds. If the light comes on at any other time, it may indicate the automatic transmission system is not functioning properly. Have the system checked. It is recommended that you visit a NISSAN dealer for this service.

Electronic locking rear differential (E-Lock) system ON indicator light (if so equipped)

DIFF
LOCK

This light comes on when the electronic locking rear differential (E-Lock) system clutch is fully engaged.

The indicator light flashes when the system is first turned on. When the system fully engages, the light remains on. If the switch is on and the indicator light continues to flash, the system is not engaged.

For additional information, see "Electronic locking rear differential (E-Lock) system switch" (P. 160) and "Electronic locking rear differential (E-Lock) system" (P. 382).

Front passenger air bag status light

The front passenger air bag status light will be lit and the passenger front air bag will be off depending on how the front passenger seat is being used.

For additional information, see "Front passenger air bag and status light" (P. 90).

Hill descent control system ON indicator light (if so equipped)

When the ignition switch is placed in the ON position, this light comes on briefly and then turns off.

The light comes on when the hill descent control system is activated.

If the hill descent control switch is on and the indicator light blinks, the system is not engaged.

If the indicator light does not come on when the hill descent switch is on, the system may not be functioning properly. Have the system checked. It is recommended that you visit a NISSAN dealer for this service.

For additional information, see "Hill descent control switch" (P. 158) and "Hill descent control system" (P. 390).

Low tire pressure warning light

Basic Information

Your vehicle is equipped with a Tire Pressure Monitoring System (TPMS) that monitors the tire pressure of all tires except the spare.

The low tire pressure warning light warns of low tire pressure or indicates that the TPMS is not functioning properly.

After the ignition switch is placed in the ON position, this light illuminates for about 1 second and turns off.

Low tire pressure warning

If the vehicle is being driven with low tire pressure, the warning light will illuminate. A "Tire Pressure Low - Add Air" warning also appears in the vehicle information display.

When the low tire pressure warning light illuminates, you should stop and adjust the tire pressure of all four tires to the recommended COLD tire pressure shown on the Tire and Loading Information label located in the driver's door opening. The low tire pressure warning light does not automatically turn off when the tire pressure is adjusted. After the tire is inflated to the recommended pressure, the vehicle must be driven at speeds above 16 mph (25 km/h) to activate the TPMS and turn off the low tire pressure warning light. Use a tire pressure gauge to check the tire pressure.

The "Tire Pressure Low - Add Air" warning appears each time the ignition switch is placed in the ON position as long as the low tire pressure warning light remains illuminated.

For additional information, see "Vehicle information display" (P. 124) and "Tire Pressure Monitoring System (TPMS)" (P. 274).

TPMS malfunction

If the TPMS is not functioning properly, the low tire pressure warning light will flash for approximately 1 minute when the ignition switch is placed in the ON position. The light will remain on after 1 minute. Have the

system checked. It is recommended that you visit a NISSAN dealer for this service. The "Tire Pressure Low — Add Air" warning does not appear if the low tire pressure warning light illuminates to indicate a TPMS malfunction.

For additional information, see "Tire Pressure Monitoring System (TPMS)" (P. 274) and "Tire pressure" (P. 461).

⚠ WARNING

- **Radio waves could adversely affect electric medical equipment. Those who use a pacemaker should contact the electric medical equipment manufacturer for the possible influences before use.**
- **If the light does not illuminate with the ignition switch placed in the ON position, have the vehicle checked as soon as possible. It is recommended that you visit a NISSAN dealer for this service.**
- **If the light illuminates while driving, avoid sudden steering maneuvers or abrupt braking, reduce vehicle speed, pull off the road to a safe location and stop the vehicle as soon as possible. Driving with under-inflated tires may permanently damage the tires and increase the likelihood of tire failure. Serious vehicle damage could occur and may lead to an accident and could result in serious personal injury or death. Check the tire pressure for all four tires. Adjust the tire pressure to the recommended COLD tire pressure show on the Tire and Loading Information label located in the driver's door opening to turn the low tire pressure warning light off. If the light still illuminates while driving after adjusting the tire pressure, a tire may be flat or the TPMS may be malfunctioning. If you have a flat tire, replace it with a spare tire as soon as possible. If no tire is flat and all tires are properly inflated, have the vehicle checked. It is recommended that you visit a NISSAN dealer for this service.**
- **When using a wheel without the TPMS such as the spare tire, the TPMS will not function and the low tire pressure warning light will flash for approximately 1 minute. The light will remain on after 1 minute. Have your tires replaced and/or TPMS system reset as soon as possible. It is recommended that you visit a NISSAN dealer for these services.**
- **Replacing tires with those not originally specified by NISSAN could affect the proper operation of the TPMS.**
- **To help avoid serious personal injury or death, when checking your tire pressure, either as part of routine maintenance or because of a TPMS alert, please check the pressure in all of your tires. Driving on underinflated tires can cause tire failure and interfere with the proper operation of other vehicle systems.**

⚠ CAUTION

- **The TPMS is not a substitute for the regular tire pressure check. Be sure to check the tire pressure regularly.**
- **If the vehicle is being driven at speeds of less than 16 mph (25 km/h), the TPMS may not operate correctly.**
- **Be sure to install the specified size of tires to the four wheels correctly.**

Malfunction Indicator Light (MIL)

Basic Information

If this indicator light comes on steady or blinks while the engine is running, it may indicate a potential emission control malfunction.

If this indicator light comes on steady for 20 seconds and then blinks for 10 seconds when the engine is not running, it indicates that the vehicle is not ready for an emission control system inspection/maintenance test. For additional information, see "Readiness for inspection/maintenance (I/M) test" (P. 543).

Operation

The MIL will come on in one of two ways:

- MIL on steady — An emission control system malfunction has been detected. Check the fuel-filler cap if the Loose Fuel Cap warning appears in the vehicle information display. If the fuel-filler cap is loose or missing, tighten or install the cap and continue to drive the vehicle. The light should turn off after a few driving trips. If the light does not turn off after a few driving trips, have the vehicle inspected. It is recommended that you visit a NISSAN dealer for this service. You do not need to have your vehicle towed to the dealer.
- MIL blinking — An engine misfire has been detected which may damage the emission control system. To reduce or avoid emission control system damage:
  - do not drive at speeds above 45 mph (72 km/h).
  - avoid hard acceleration or deceleration.
  - avoid steep uphill grades.
  - if possible, reduce the amount of cargo being hauled or towed.

The MIL may stop blinking and come on steady. Have the vehicle inspected. It is recommended that you visit a NISSAN dealer for this service. You do not need to have your vehicle towed to the dealer.

⚠ CAUTION

Continued vehicle operation without having the emission control system checked and repaired as necessary could lead to poor driveability, reduced fuel economy, and possible damage to the emission control system.

Master warning light

This light comes on when various vehicle information display warnings appear.

- No key warning
- Low fuel warning
- Low windshield-washer fluid warning
- Loose fuel cap warning
- Low tire pressure warning
- 4WD error (if so equipped)

Rear Automatic Braking (RAB) system warning light

This light comes on when the ignition switch is placed in the ON position. It turns off after the engine is started.

This light illuminates when the RAB system is turned off in the vehicle information display.

If the light blinks or illuminates when the RAB system is on, it may indicate that the system is unavailable. For additional information, see "Rear Automatic Braking (RAB)" (P. 342).

Slip indicator light

This indicator light will blink when the Vehicle Dynamic Control (VDC) system is operating, thus alerting the driver to the fact that the road surface is slippery and the vehicle is nearing its traction limits.

You may feel or hear the system working; this is normal.

The light will blink for a few seconds after the VDC system stops limiting wheel spin.

The indicator light also comes on when you place the ignition switch in the ON position. The light will turn off after approximately 2 seconds if the system is operational. If the light does not come on have the system checked. It is recommended that you visit a NISSAN dealer for this service.

Vehicle Dynamic Control (VDC) OFF indicator light

This indicator light comes on when the VDC OFF switch is pushed to off. This indicates the VDC system is not operating.

Push the VDC OFF switch again or restart the engine and the system will operate normally. For additional information, see "Vehicle Dynamic Control (VDC) system" (P. 387).

The VDC OFF indicator light also comes on when you place the ignition switch in the ON position. The light will turn off after about 2 seconds if the system is operational. If the light stays on or comes on along with the indicator light while you are driving, have the VDC system checked. It is recommended that you visit a NISSAN dealer for this service.

While the VDC system is operating, you might feel a slight vibration or hear the system working when starting the vehicle or accelerating, but this is normal.

WARNING/INDICATOR LIGHTS (other)

Basic Information

For additional information, see "Vehicle information display" (P. 124).

Front fog light indicator light (green) (if so equipped)

The front fog light indicator light illuminates when the front fog lights are on. For additional information, see "Fog light switch" (P. 155).

High Beam Assist indicator light (green)

This indicator light illuminates when the headlights come on while the headlight switch is in the AUTO position with the high beams selected. This indicates that the high beam assist is operational.

For additional information, see "High Beam Assist" (P. 151).

High beam indicator light (blue)

This blue light comes on when the headlight high beams are on and goes out when the low beams are selected.

The high beam indicator light also comes on when the passing signal is activated.

Side light and headlight indicator light (green)

The side light and headlight indicator light illuminates when the side light or headlight position is selected. For additional information, see "Headlight and turn signal switch" (P. 148).

TOW mode ON indicator light (green) (if so equipped)

This light comes on when the tow mode function is on.

Turn signal/hazard indicator lights (green)

The appropriate light flashes when the turn signal switch is activated.

Both lights flash when the hazard switch is turned on.

AUDIBLE REMINDERS

Brake pad wear warning

The disc brake pads have audible wear warnings. When a disc brake pad requires replacement, it makes a high pitched scraping sound when the vehicle is in motion, whether or not the brake pedal is depressed. Have the brakes checked as soon as possible if the warning sound is heard.

Light reminder chime

With the ignition switch placed in the OFF position, a chime sounds when the driver's door is opened if the headlights or parking lights are on.

Turn the headlight control switch off before leaving the vehicle.

NISSAN Intelligent Key® door buzzer

The Intelligent Key door buzzer sounds if any one of the following improper operations is found.

- The Intelligent Key is left inside the vehicle when locking the doors.
- The Intelligent Key is taken outside the vehicle when operating the vehicle.

When the buzzer sounds, be sure to check both the vehicle and the Intelligent Key. For additional information, see "NISSAN Intelligent Key®" (P. 194).

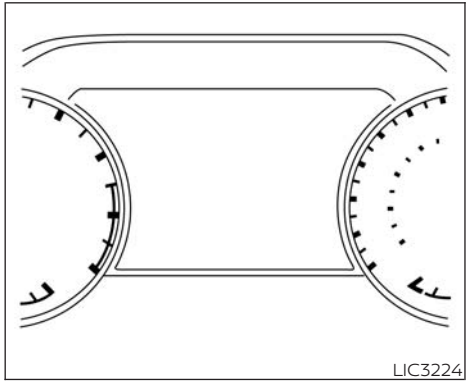

BASIC INFORMATION

The vehicle information display is located to the left of the speedometer. It displays such items as:

- Vehicle settings
- Trip computer information
- Drive system warnings and settings (if so equipped)
- Cruise control system information
- Blind Spot Warning (BSW) system
- Rear Cross Traffic Alert (RCTA) system
- NISSAN Intelligent Key® operation information
- Indicators and warnings
- Tire Pressure information

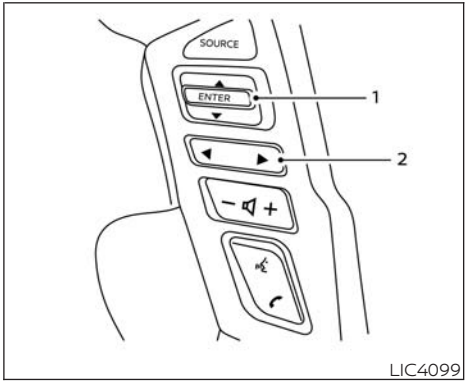

HOW TO USE THE VEHICLE INFORMATION DISPLAY

The vehicle information display can be navigated using the ENTER and ◀ , ▶ buttons located on the steering wheel.

1. ENTER — press to select the vehicle information menu items. Additionally, use the UP/DOWN ▲▼ function to navigate the menu items
2. ◀ , ▶ — move LEFT/RIGHT to navigate through the items in the vehicle information display

The ENTER button also controls audio functions. For additional information, refer to the separate NissanConnect® Owner's Manual.

STARTUP DISPLAY

When the vehicle is placed in the ON or ACC (if so equipped) position, the vehicle information display may display the following screens:

- Speed
- Off Road (if so equipped)
- Auxiliary Gauges (if so equipped)
- Driving
- Fuel Economy
- Audio
- Navigation (if so equipped)
- Compass (if so equipped)
- Driving Aids
- Tire Pressures
- Warning Confirmation
- Settings

Warning Confirmation will only display if there are any warnings present. For additional information, see "Vehicle information display warnings and indicators" (P. 137).

To control which items display in the vehicle information display, see "Settings" (P. 130).

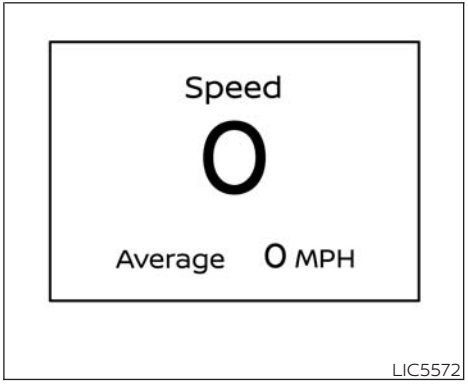

TRIP COMPUTER

Vehicle speed (MPH or km/h)

The vehicle speed mode shows the current vehicle speed and the average vehicle speed since the last reset.

Average vehicle speed:

Press the ENTER button on the steering wheel for longer than 1.5 seconds to reset.

The average vehicle display is updated every 30 seconds. the first 30 seconds after a rest, the display shows "– – –'

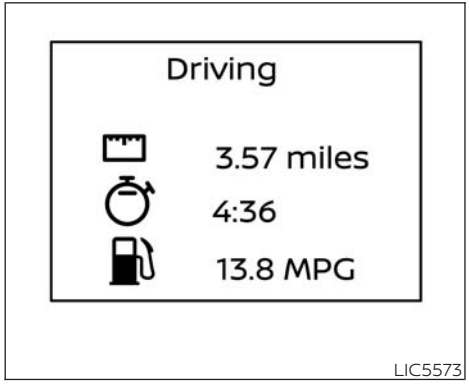

Driving display

Elapsed time:

The elapsed time shows the time since the last reset. Press the ENTER button on the steering wheel for longer than 1.5 seconds to reset. The trip odometer is also reset at the same time.

Trip odometer:

The trip odometer shows the total distance the vehicle has been driven since the last reset. Press the ENTER button on the steering wheel for longer than 1.5 seconds to reset. The elapsed time is also reset at the same time.

Average fuel consumption:

The average fuel consumption mode shows the average fuel consumption since the last reset. Press the ENTER button on the steering wheel for longer than 1.5 seconds to reset.

The display is updated every 30 seconds. For about the first 1/3 of a mile (500 m) after a reset, the display shows "– –."

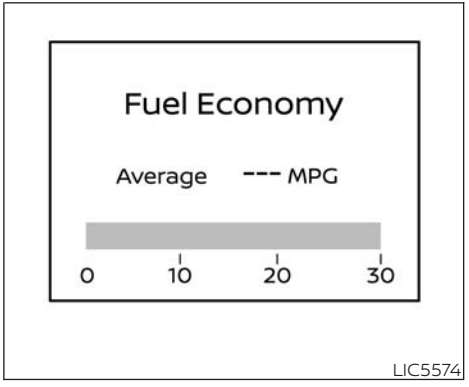

Fuel economy display

Current fuel consumption:

The current fuel consumption mode shows the current fuel consumption.

Average fuel consumption:

The average fuel consumption mode shows the average fuel consumption since the last reset. Press the ENTER button on the steering wheel for longer than 1.5 seconds to reset.

The display is updated every 30 seconds. For about the first 1/3 of a mile (500 m) after a reset, the display shows "– –."

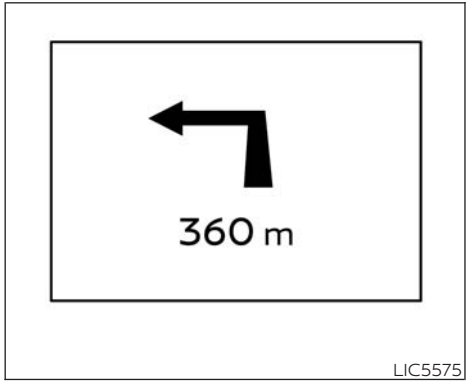

Navigation (if so equipped)

When the route guidance is set in the navigation system, this item shows the navigation route information.

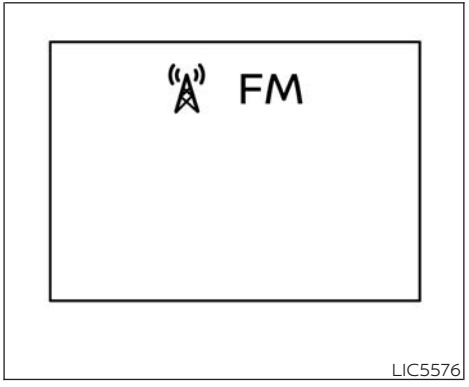

Audio

The audio mode shows the status of audio information.

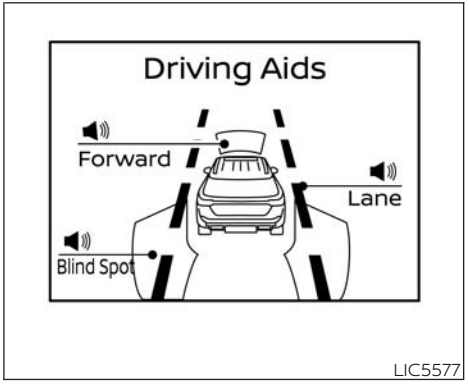

Driving Aids

The driving aids mode shows the operating condition for the following systems (if so equipped):

- Forward
  - Automatic Emergency Braking (AEB) with Pedestrian Detection system
  - Intelligent Forward Collision Warning (I-FCW)
- Lane:
  - Lane Departure Warning (LDW)
- Blind Spot:
  - Blind Spot Warning (BSW)

For additional information, see "Blind Spot Warning (BSW)" (P. 301), "Lane Departure Warning (LDW)" (P. 296), "Automatic Emergency Braking (AEB) with Pedestrian Detection" (P. 347), or "Intelligent Forward Collision Warning (I-FCW)" (P. 358).

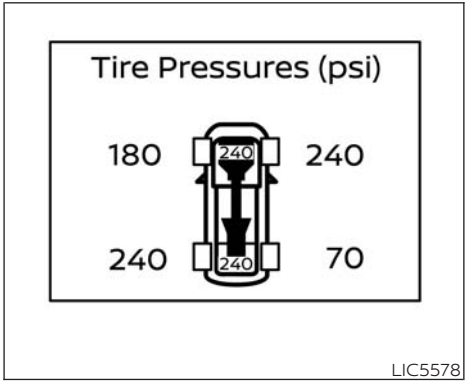

Tire Pressures

The tire pressure mode shows the pressure of all four tires while the vehicle is driven.

When the "Tire Pressure Low — Add Air" warning appears, the display can be switched to the tire pressure mode by pressing the ENTER button to reveal additional details on the displayed warning.

For additional information, see "Low tire pressure warning light" (P. 119), "Tire Pressure Monitoring System (TPMS)" (P. 274), "Flat tire" (P. 407) and "Types of tires" (P. 468)

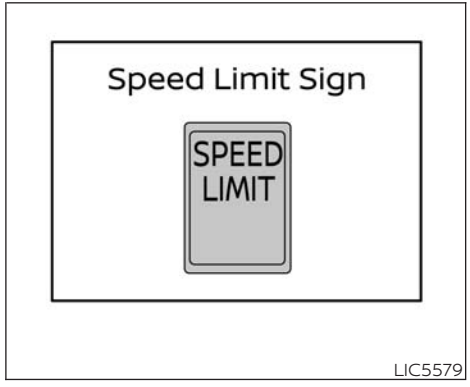

Traffic Sign Recognition (if so equipped)

The Traffic Sign Recognition (TSR) system provides the driver with information about the most recently detected speed limit.

For additional information, see "Traffic Sign Recognition (TSR) (P. 293).

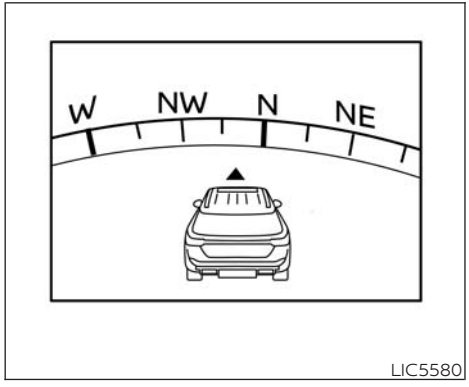

Compass

This display indicates the direction the vehicle is heading.

Idling Stop System

The Idling Stop System provides the driver with information about the amount of fuel saved while using the system.

For additional information, see "Idling Stop System" (P. 395).

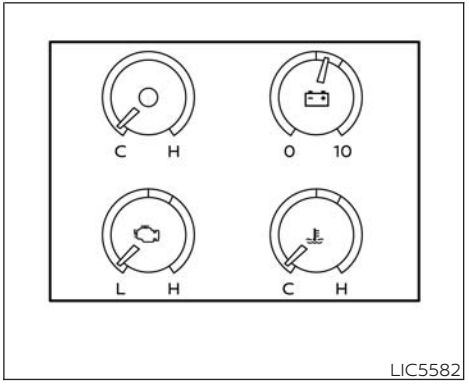

Auxiliary gauges (if so equipped)

This is not a physical gauge. It is a display option in the vehicle information display that can be selected. For additional information, see "Auxiliary gauges" (P. 111).

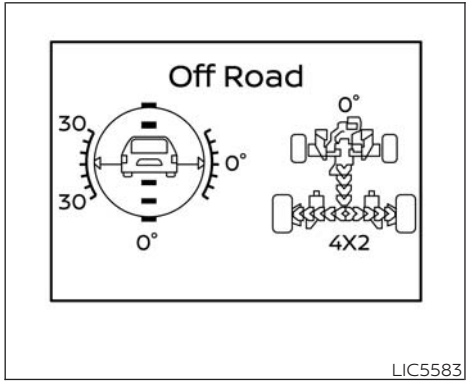

Off—road and 4-Wheel Drive (4WD) monitor (if so equipped)

This is not a physical gauge. It is a display option in the vehicle information display that can be selected. For additional information, see "Off—road and 4-Wheel Drive (4WD) monitor" (P. 112).

SETTINGS

Basic Information

The setting mode allows you to change the information displayed in the vehicle information display:

- Driver Assistance
- Meter Settings
- Vehicle Settings
- Alerts
- Maintenance
- Unit
- Language
- Factory Reset

Driver Assistance

The driver assistance menu allows the user to change the various driving and parking aids.
Some menu items shown below may not be equipped on your vehicle.

Menu item		Explanation
Lane		Displays available lane options.
	Warning (LDW)	Allows user to turn the Lane Departure Warning (LDW) system on or off. For additional information, see "Lane Departure Warning (LDW)" (P. 296).
Blind Spot		Displays available blind spot options.
	Warning (BSW)	Allows user to turn the Blind Spot Warning (BSW) system on or off. For additional information, see "Blind Spot Warning (BSW)" (P. 301).
Emergency Brake		Displays available emergency brake options.
	Front	Allows user to turn the front emergency braking system on or off. For additional information, see "Automatic Emergency Braking (AEB) with Pedestrian Detection" (P. 347) and "Intelligent Forward Collision Warning (I-FCW)" (P. 358).
	Rear	Allows user to turn the rear emergency braking system on or off. For additional information, see "Rear Automatic Braking (RAB)" (P. 342).
Speed Limit Sign		Allows use to turn the Speed Limit Sign recognition on or off. For additional information, see "Traffic Sign Recognition (TSR)" (P. 293).
Driver Attention		Allows user to turn the Intelligent Driver Alertness system on or off. For additional information, see "Intelligent Driver Alertness (I-DA)" (P. 370).
Parking Aids		Displays available parking aids.
	Moving Object	Allows user to turn the Moving Object Detection (MOD) on or off. For additional information, see "Moving Object Detection (MOD)" (P. 248).
	CTA	Allows user to turn the Rear Cross Traffic Alert (RCTA) system on or off. For additional information, see "Rear Cross Traffic Alert (RCTA)" (P. 311).
	Sensor	Allows the user to turn the sensors on or off.
	Display	Allows user to turn the display on or off in the vehicle information display.
	Volume	Allows user to adjust the volume of warning chimes.
	Range	Allows user to set a specific range for the sensors to engage.

Meter Settings

The meter settings allow the user to change the settings for the vehicle information display.

Some menu items shown below may not be equipped on your vehicle.

Menu item		Explanation
Main Menu Selection		Allows user to customize the screens shown in the vehicle information display.
	Speed	Allows user to turn the speedometer screen on or off in the vehicle information display.
	Off Road	Allows user to turn the off road and 4WD monitor on or off in the vehicle information display. For additional information, see "Off-Road and 4-Wheel Drive (4WD) Monitor" (P. 112).
	Auxiliary Gauges	Allows user to turn the auxiliary gauges on or off in the vehicle information display. For additional information, see "Auxiliary gauges" (P. 111).
	Driving	Allows user to turn the drive computer screen on or off in the vehicle information display.
	Fuel Economy	Allows user to turn the fuel economy on or off in the vehicle information display.
	Audio	Allows user to turn the audio screen on or off in the vehicle information display. For additional information, refer to the separate NissanConnect® Owner's Manual.
	Navigation	Allows user to turn the navigation on or off in the vehicle information display. For additional information, refer to the separate NissanConnect® Owner's Manual.
	Speed Limit Sign	Allows user to turn the speed limit sign screen on or off in the vehicle information display.
	Driving Aids	Allows user to turn the driving aids on or off in the vehicle information display.
	Tire Pressures	Allows user to turn the tire pressures screen on or off in the vehicle information display.
	Stop/Start	Allows user to turn the Idling stop system screen on or off in the vehicle information display.
ECO Drive Report		Allows user to access the ECO drive report.
	Display	Allows user to turn the ECO drive report on or off.
	ECO Drive Report	Allows user to view and reset ECO drive report history.
Welcome Effect		Allows user to customize the available welcome effects.
	Dial Effect	Allows user to turn the dial effect on or off.
	Display Effect	Allows user to turn the display effect on or off.

Vehicle Settings

The vehicle settings allow the user to change the settings for lights, wipers, locking, keys, and other vehicle settings.

Some menu items shown below may not be equipped on your vehicle.

Menu item			Explanation
Rear Door Alert			Displays the available rear Door Alert options.
	Alert and Horn		When selected, the alert is displayed and the horn sounds.
	Alert Only		When selected, only the alert is displayed.
	Off		When selected, no alert or horn will be active.
Lighting			Displays available lighting features of the vehicle.
	Welcome Light		Allows user to turn the welcome light on or off.
	Auto Room Lamp		Allows user to turn the auto room lamp feature on or off.
	Light Sensitivity		Allows user to change when the lights illuminate based on the brightness outside the vehicle.
	Light Off Delay		Allows user to change the duration of time that the automatic headlights stay on after the vehicle is shut off.
Turn indicator			Displays available turn indicator options.
	3 Flash Pass		Allows user to turn the 3 flash pass on or off.
Locking			Displays available locking options.
	I-Key Door Lock		Allows user to turn I-key door lock on or off. When turned on, the request switch on the door is activated.
	Selective Unlock		Allows user to turn selective unlock on or off. When turned on, only the driver's door is unlocked after the door unlock operation. When the door handle request switch on the driver's or front passenger's side door is pushed to be unlocked, only the corresponding door is unlocked first. All the doors can be unlocked if the door unlock operation is performed again within 1 minute. When this item is turned off, all the doors will be unlocked after the door unlock operation is performed once.
	Answer Back. Horn		Allows user to turn answer back horn on or off.
	Auto Unlock		Displays available options for the auto door unlock.
		Off	Doors will have to be manually unlocked.
		IGN Off	Doors will unlock when the ignition is placed in the OFF position.
		Shift P	Doors will unlock when the vehicle is shifted into P (Park).

Wipers			Displays available wiper options.
	Speed Dependent		Allows user to turn the speed dependent feature on or off. For additional information, see "Wiper and washer switch" (P. 147).
	Headlamp On		Displays available headlamp on options.
		Off	Headlights do not activate automatically when the wipers are activated.
		Wiper Low & High	Headlights activate when the wiper stalk is set to either low or high mode.
		Wiper INT, Low & High	Headlights activate when the wiper stalk is set to intermittent, low, or high mode.

Alerts

The alarm menu allows the user to set specific alarms for various items on the vehicle.

Some menu items shown below may not be equipped on your vehicle.

Menu item	Explanation
Timer Alert	Allows user to set the timer alert alarm.
Navigation	Allows user to turn the navigation alarm on or off.
Phone	Allows user to turn the phone alarm on or off.
Mail	Allows user to turn the mail alarm on or off.

Maintenance

The maintenance menu allows the user to set reminders for various vehicle maintenance items.

Some menu items shown below may not be equipped on your vehicle.

WARNING

The tire replacement indicator is not a substitute for regular tire checks, including tire pressure checks. For additional information, see "Changing wheels and tires" (P. 470). Many factors including tire inflation, alignment, driving habits and road conditions affect tire wear and when tires should be replaced. Setting the tire replacement indicator for a certain driving distance does not mean your tires will last that long. Use the tire replacement indicator as a guide only and always perform regular tire checks. Failure to perform regular tire checks, including tire pressure checks could result in tire failure. Serious vehicle damage could occur and may lead to a collision, which could result in serious personal injury or death.

Menu item		Explanation
Maintenance		Allows user to cycle through various maintenance items and set reminders to perform maintenance at specific intervals.
	Oil and Filter	Allows user to set an oil and filter reminder at a specific interval or reset the current one.
	Air Filter	Allows user to set an air filter reminder at a specific interval or reset the current one.
	Tire	Allows user to set a tire reminder at a specific interval or reset the current one.
	Brake Pad	Allows user to set a brake pad reminder at a specific interval or reset the current one.
	Brake Fluid	Allows user to set a brake fluid reminder at a specific interval or reset the current one.
	Battery	Allows user to set a battery reminder at a specific interval or reset the current one.
	Transmission Fluid	Allows user to set a transmission fluid reminder at a specific interval or reset the current one.
	Engine Coolant	Allows user to set an engine coolant reminder at a specific interval or reset the current one.
	Spark Plug	Allows user to set a spark plug reminder at a specific interval or reset the current one.
	Other	Allows user to set a reminder, other than for the maintenance items listed above, at a specific interval or reset the current one.

Unit

The unit menu allows the user to change the units shown in the vehicle information display.

Menu item	Explanation
Mileage	Displays available mileage display units.
Pressure	Displays available pressure display units.
Temperature	Displays available temperature display units.

Language

The language menu allows the user to change the languages displayed in the vehicle information display.

Menu item	Explanation
Language	Displays available language options for the vehicle information display.

Factory Reset

The factory reset menu allows the user to restore the vehicle information display settings to factory status.

Menu item	Explanation
Factory Reset	Allows user to reset the vehicle information display settings to the original factory settings. Once selected, the user can confirm or deny the reset.

VEHICLE INFORMATION DISPLAY WARNINGS AND INDICATORS

Basic Information

The following messages may appear in your vehicle information display.

Key Battery Low

This indicator appears when the Intelligent Key battery is running out of power.

If this indicator appears, replace the battery with a new one. For additional information, see "Intelligent Key battery replacement" (P. 454).

Key ID Incorrect

This warning appears when the ignition switch is placed from the OFF position and the Intelligent Key is not recognized by the system. You cannot start the engine with an unregistered key.

For additional information, see "NISSAN Intelligent Key®" (P. 194).

Key System Error: See Owner's Manual

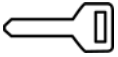

After the ignition switch is placed in the ON position, this warning appears for a period of time and then turns off.

The Key System Error message warns of a malfunction with the Intelligent Key system. If the warning appears while the engine is stopped, it may be impossible to start the engine.

If the warning appears while the engine is running, you can drive the vehicle. However, in these cases, have the system checked. It is recommended that you visit a NISSAN dealer for this service.

No Key Detected

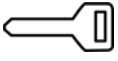

This warning appears when the Intelligent Key is left outside the vehicle with the ignition switch in the ON position. Make sure the Intelligent Key is inside the vehicle.

For additional information, see "NISSAN Intelligent Key®" (P. 194).

Battery Voltage Low Charge battery

This warning appears when the battery is low and needs to be charged.

Brightness indicator

This indicator appears when the vehicle information display screen brightness is being adjusted.

Door Open

This warning appears when a door has been opened.

Loose Fuel Cap

This warning appears when the fuel-filler cap is not tightened correctly after the vehicle has been refueled. For additional information, see "Fuel-filler door" (P. 214).

Low Fuel

This warning appears when the fuel level in the fuel tank is getting low. Refuel as soon as it is convenient, preferably before the fuel gauge reaches 0 (Empty). **There will be a small reserve of fuel in the tank when the fuel gauge needle reaches 0 (Empty).**

Low Tire Pressure Error — Info

This warning appears when the low tire pressure warning light in the meter illuminates and low tire pressure is detected. Press the ENTER button for information about the low tire pressure. For additional information, see "Low tire pressure warning light" (P. 119) and "Tire Pressure Monitoring System (TPMS)" (P. 274).

Low Washer Fluid

This warning appears when the windshield-washer fluid is at a low level. Add windshield-washer fluid as necessary. For additional information, see "Windshield-washer fluid" (P. 443).

Maintenance indicators

When engine oil service is due, one or more of these icons will appear automatically to remind you. For additional information, see "Engine oil" (P. 436).

These will also appear when the user-set reminders are met. For additional information, see "Vehicle information display" (P. 124).

Power turned off to save the battery

This warning appears after the ignition switch is automatically turned off to save the battery.

Power will turn off to save the battery

This message appears in the vehicle information display after a period of time if the ignition switch is in the ACC or the ON position and if the vehicle is in P (Park). For additional information, see "Push-button ignition switch positions" (P. 283).

Push brake and start switch to drive

This indicator appears when the shift lever is in the P (Park) position.

This indicator means that the engine will start by pushing the ignition switch with the brake pedal depressed. You can start the engine from any position of the ignition switch.

Range XX miles

This warning appears to indicate the approximate distance remaining before the fuel reaches 0 (Empty).

Check Rear Seat For All Articles

When the system is enabled, this message appears when the vehicle comes to a complete stop, the vehicle is transitioned from the D (Drive) position to P (Park) position,

and the driver exits the vehicle. This message alerts the driver, after a period of time, to check for items in the rear seat after the audible alert has been provided.

NOTE:

This system is disabled until a driver enables it using the vehicle information display. For additional information, see "How to use the vehicle information display" (P. 124).

For additional information, see "Rear Door Alert" (P. 168).

Rear Door Alert is activated

When the system is enabled, this message appears when the Rear Door Alert system is active and can remind the driver to check the back seat.

- Using the steering wheel switch, a driver can select "Dismiss Message" to clear the display for a period of time. If no selection is made, this message automatically turns off after a period of time.
- Using the steering wheel switch, a driver can select "Disable Alert" to disable the horn alert for the remainder of the current trip.

WARNING

Selecting "Dismiss Message" during a stop within a trip temporarily dismisses the message for that stop without turning the system off. Alerts can be provided for other stops during the trip. Selecting "Disable Alert" turns off the Rear Door Alert system for the remainder of a trip and no audible alert will be provided.

NOTE:

This system is disabled until a driver enables it using the vehicle information display. For additional information, "How to use the vehicle information display" (P. 124).

For additional information, "Rear Door Alert" (P. 168).

Release Parking Brake

This warning appears in the message area of the vehicle information display when the parking brake is set and the vehicle is driven. Press the brake pedal to release the parking brake.

Reminder: Turn OFF Headlights

This warning appears when the headlights are left in the ON position when exiting the vehicle. Place the headlight switch in the OFF or AUTO position. For additional information, see "Headlight and turn signal switch" (P. 148).

Remote Engine Start Mode

This warning appears in the vehicle information display when the vehicle has been started using the remote start function. To start the vehicle, apply the brake and place the ignition switch in the ON position.

Rear seat belt warning

REAR

- This warning includes display of the seat belts for rear positions only. Rear seat belts that are unfastened will appear red.

- If any rear seat belts are unfastened when the ignition switch is pushed to the ON position, this warning will display for about one minute, or until dismissed.
- When a rear seat belt is changed from fastened to unfastened, this warning will display for over one minute, or until dismissed.
- If the vehicle is driven above 9 mph (15 km/h) during or after the status change, this warning will display and the chime will sound for over one minute. During this time, the warning and chime cannot be dismissed unless the rear seat belt is fastened again.

NOTE:

Opening and closing a rear door while stopped will reset this warning, similar to pushing the ignition switch to ON again.

NOTE:

In vehicles with only 2 seats in the rear row, only 2 seats will be displayed.

Shift to Park

This warning appears when the ignition switch is in the ACC or OFF position and the shift lever is not in the P (Park) position. Also, a chime sounds when the ignition switch is in the ACC or OFF position.

If this warning appears, move the shift lever to the P (Park) position and start the engine.

Shipping Mode On Push Storage Fuse

This warning may appear if the extended storage switch is not pushed in. When this warning appears, push in the extended storage switch to turn off the warning. For additional information, see "Extended storage switch" (P. 172).

Tire Pressure Low - Add Air

This warning appears when the low tire pressure warning light in the meter illuminates and low tire pressure is detected. The warning appears each time the ignition switch is placed in the ON position as long as the low tire pressure warning light remains illuminated. If this warning appears, stop the vehicle and adjust the tire pressures of all four tires to the recommended COLD tire pressure shown on the Tire and Loading Information label. For additional information, see "Low tire pressure warning light" (P. 119) and "Tire Pressure Monitoring System (TPMS)" (P. 274).

TPMS Error: See Owner's Manual

This warning appears when there is an error with your TPMS. If this warning appears, have the system checked. It is recommended that you visit a NISSAN dealer for this service.

When parked apply parking brake

This message appears when a malfunction occurs in the electric shift control system below 3 mph (5 km/h).

Have the system checked. It is recommended that you visit a NISSAN dealer for this service.

4WD Error: See Owner's Manual

This warning appears when the 4-wheel drive system is not functioning properly while the engine is running.

4WD shift indicators

These indicators show which 4WD mode is selected. For additional information, see "Using 4-wheel drive (4WD)" (P. 374).

4WD MODE SHIFTING

This message appears when the vehicle is shifting into 4WD. For additional information, see "Using 4-wheel drive (4WD)" (P. 374).

AT (Automatic Transmission) CHECK

If the service warning appears while the engine is running, or while driving, it may indicate that the AT is not functioning properly and may need servicing. Have the system checked, and if necessary, repaired promptly. It is recommended that you visit a NISSAN dealer for this service.

AT (Automatic Transmission) Error: See Owner's Manual

If this message appears while the engine is running, or while driving, it may indicate that the AT is not functioning properly and may need servicing. Have the system checked, and if necessary, repaired promptly. It is recommended that you visit a NISSAN dealer for this service.

Service AT

This transmission has a high fluid temperature protection mode. If the fluid temperature becomes too high (for example, climbing steep grades in high temperatures with heavy loads, such as when towing a trailer), engine power and, under some conditions, vehicle speed will be decreased automatically to reduce the chance of transmission damage. Vehicle speed can be controlled with the accelerator pedal, but the engine and vehicle speed may be reduced.

⚠ WARNING

When the high fluid temperature protection mode operation occurs, vehicle speed may be gradually reduced. The reduced speed may be lower than other traffic, which could increase the chance of a collision. Be especially careful when driving. If necessary, pull to the side of the road at a safe place and allow the transmission to return to normal operation; or have it repaired if necessary.

Blind Spot Warning (BSW)/Rear Cross Traffic Alert (RCTA) indicator

This indicator appears when the BSW and/or RCTA systems are engaged.

This indicator also appears when the RCTA system is unavailable.

For additional information, see "Blind Spot Warning (BSW)" (P. 301) or "Rear Cross Traffic Alert (RCTA)" (P. 311).

Cruise control indicator

This indicator shows the cruise control system status.

For additional information, see "Conventional (fixed speed) cruise control mode" (P. 338).

Currently unavailable

This message may appear when the Intelligent Cruise Control (ICC) system is engaged. Under the following conditions, the ICC system is automatically cancelled:

- When the VDC operates.
- When a wheel slips.
- When the VDC system is turned off.

The above system cannot be used in some situations (VDC operates, wheel slips, and VDC system is off).

Driver Attention Alert — Malfunction

This warning appears when the Intelligent Driver Alertness (I-DA) system is not functioning properly. For additional information, see "Intelligent Driver Alertness (I-DA)" (P. 370).

Driver Attention Alert — Take a Break?

This alert appears when the system has detected that the driver may be displaying fatigue or a lack of attention.

Forward Driving Aids Temporarily Disabled Front Sensor Blocked See Owner's Manual

This message appears when the front radar sensor may be obstructed due to:

- mud, dirt, snow, ice, etc.
- inclement weather (rain, fog, snow, etc.)

All forward driving aids are temporarily disabled until the system detects that the front radar sensor is no longer obstructed.

For additional information, see:

- Automatic Emergency Braking (AEB) with Pedestrian Detection (P. 347)
- Intelligent Cruise Control (ICC) (P. 319)
- Intelligent Forward Collision Warning (I-FCW) (P. 358)

Idling Stop System

This indicator shows the Idling Stop System status.

For addition information, see "Idling Stop System" (P. 395).

Intelligent Cruise Control (ICC) indicators

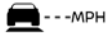

These indicators show the Intelligent Cruise Control (ICC) system status. The status is shown by color. For additional information, see "Intelligent Cruise Control (ICC)" (P. 319).

Automatic Emergency Braking (AEB) with Pedestrian Detection emergency warning indicator

This indicator appears along, with an audible warning, when the system detects the possibility of a forward collision.

For additional information, see "Automatic Emergency Braking (AEB) with Pedestrian Detection" (P. 347).

Lane Departure Warning (LDW) indicator

This indicator appears when the LDW system is engaged.

For additional information, see "Lane Departure Warning (LDW)" (P. 296).

Malfunction

This warning appears when one or more of the following systems (if so equipped) is not functioning properly:

- Blind Spot Warning (BSW)
- Intelligent Cruise Control (ICC)
- Lane Departure Warning (LDW)
- Rear Cross Traffic Alert (RCTA)
- Traffic Sign Recognition (TSR)

If one or more of these warning appears, have the system checked. It is recommended that you visit a NISSAN dealer for this service.

Not Available High Camera Temp

This message appears when the camera detects an interior temperature of more than approximately 104°F (40°C).

For additional information, see "Lane Departure Warning (LDW)" (P. 296).

Parking Sensor

This indicator appears when the sensor is activated. For additional information, see "Rear Sonar System (RSS)" (P. 391).

Parking Sensor Error: See Owner's Manual

This warning appears when there is an error with the system. For additional information, see "Rear Sonar System (RSS)" (P. 391).

Rear Automatic Braking (RAB) system indicator

This indicator appears to indicate the status of the Rear Automatic Braking (RAB) system. For additional information, see "Rear Automatic Braking (RAB)" (P. 342).

System fault See Owner's Manual

This warning appears if there is a malfunction in one of the following systems:

- Automatic Emergency Braking (AEB) with Pedestrian Detection
- Intelligent Forward Collision Warning (I-FCW)
- Rear Automatic Braking (RAB)

For additional information, see "Automatic Emergency Braking (AEB) with Pedestrian Detection" (P. 347), "Intelligent Forward Collision Warning (I-FCW)" (P. 358) and "Rear Automatic Braking (RAB)" (P. 342).

Speed Limit Sign indicator

This message may appear when the Traffic Sign Recognition system is engaged.

For additional information, see "Traffic Sign Recognition (TSR)" (P. 293).

Unavailable: Side Radar Obstruction

This message appears when the Blind Spot Warning (BSW) or Rear Cross Traffic Alert (RCTA) systems become unavailable because a radar blockage is detected. For additional information, see "Blind Spot Warning (BSW)" (P. 301) and "Rear Cross Traffic Alert (RCTA)" (P. 311).

Vehicle ahead detection indicator

This indicator appears when the Automatic Emergency Braking (AEB) system is engaged and has detected a vehicle.

For additional information, see "Automatic Emergency Braking (AEB) with Pedestrian Detection" (P. 347).

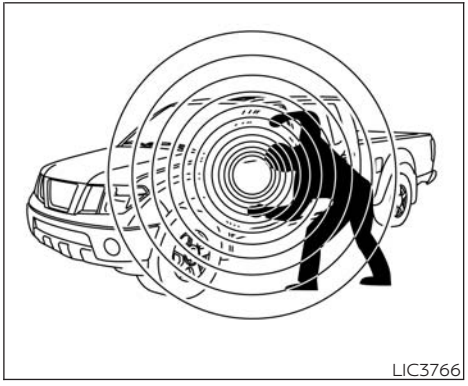

BASIC INFORMATION

Your vehicle may have two types of security systems:

- Vehicle security system (if so equipped)
- NISSAN Vehicle Immobilizer System

VEHICLE SECURITY SYSTEM (if so equipped)

Basic Information

The vehicle security system provides visual and audible alarm signals if someone opens the doors when the system is armed. It is not, however, a motion detection-type system that activates when a vehicle is moved or when a vibration occurs.

The system helps deter vehicle theft but cannot prevent it, nor can it prevent the theft of interior or exterior vehicle components in all situations. Always secure your vehicle even if parking for a brief period. Never leave your keys in the vehicle, and always lock the vehicle when unattended. Be aware of your surroundings, and park in secure, well-lit areas whenever possible.

Many devices offering additional protection, such as component locks, identification markers, and tracking systems, are available at auto supply stores and specialty shops. A NISSAN dealer may also offer such equipment. Check with your insurance company to see if you may be eligible for discounts for various theft protection features.

How to arm the vehicle security system

1. Close all windows. **(The system can be armed even if the windows are open.)**
2. Remove the Intelligent Key from the vehicle.
3. Close all doors. Lock all doors. The doors can be locked with the power door lock switch (if the door is opened, locked and then closed) or with the key fob.

   Key fob operation:

- Press the button on the key fob. All doors lock. The hazard lights flash twice and the horn beeps once to indicate all doors are locked.
- When the button is pressed with all doors locked, the hazard lights flash twice and the horn beeps once as a reminder that the doors are already locked.

The horn may or may not beep.

4. Confirm that the indicator light comes on. The indicator light stays on for about 30 seconds. The vehicle security system is now pre-armed. After about 30 seconds the vehicle security system automatically shifts into the armed phase. The indicator light begins to flash once every 3 seconds. If, during the 30-second pre-arm time period, the driver's door is unlocked by the key fob or the ignition switch is placed in ACC or ON position, the system will not arm.

- **If the indicator light fails to glow for a period of time, unlock the door once and lock it again.**
- **Even when the driver and/or passengers are in the vehicle, the system will arm with all doors closed and locked with the ignition switch placed in the OFF position.**

Vehicle security system activation

The vehicle security system will give the following alarm:

- The headlights blink and the horn sounds intermittently.
- The alarm automatically turns off after a period of time. However, the alarm reactivates if the vehicle is tampered with again. The alarm can be shut off by unlocking the driver's door by pressing the button on the key fob.

The alarm is activated by:

- Opening a door without using the key fob (even if the door is unlocked by using the inside lock knob or the power door lock switch).

How to stop an activated alarm

The alarm stops only by pressing the button on the key fob.

NISSAN VEHICLE IMMOBILIZER SYSTEM

Basic Information

The NISSAN Vehicle Immobilizer System will not allow the engine to start without the use of a registered key.

If the engine fails to start using a registered key (for example, when interference is caused by another registered key, an automated toll road device or automatic payment device on the key ring), restart the engine using the following procedures:

1. Leave the ignition switch placed in the ON position for approximately 5 seconds.
2. Place the ignition switch in the OFF or LOCK position and wait approximately 10 seconds.
3. Repeat steps 1 and 2.
4. Restart the engine while holding the device (which may have caused the interference) separate from the registered key.

If the no start condition re-occurs, NISSAN recommends placing the registered key on a separate key ring to avoid interference from other devices.

FCC Notice:

For USA:

This device complies with Part 15 of the FCC Rules. Operation is subject to the following two conditions: (1) This device may not cause harmful interference, and (2) this device must accept any interference received, including interference that may cause undesired operation.

NOTE:

Changes or modifications not expressly approved by the party responsible for compliance could void the user's authority to operate the equipment.

For Canada:

This device contains licence-exempt transmitter(s)/receiver(s) that comply with Innovation, Science and Economic Development Canada's licence-exempt RSS(s). Operation is subject to the following two conditions: (1) This device may not cause interference. (2) This device must accept any interference, including interference that may cause undesired operation of the device.

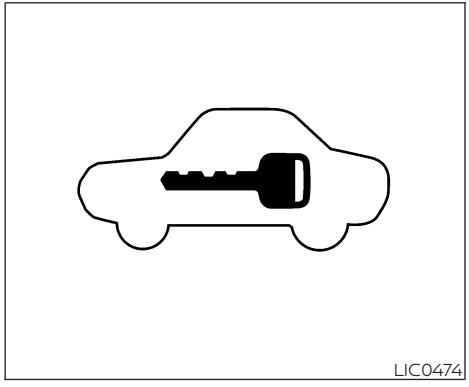
LIC0474

Security indicator light

This light blinks when the ignition switch is placed in the LOCK position.

This function indicates the NISSAN Vehicle Immobilizer System is operational.

If the NISSAN Vehicle Immobilizer System is malfunctioning, the light will remain on while the ignition switch is placed in the ON position.

If the light still remains on and/or the engine will not start, seek service for the NISSAN Vehicle Immobilizer System as soon as possible. Please bring all registered keys that you have. It is recommended that you visit a NISSAN dealer for this service.

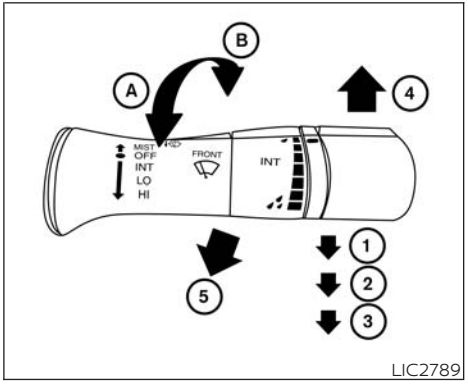

LIC2789

SWITCH OPERATION

The windshield wiper and washer operates when the ignition switch is in the ON position.

Push the lever down to operate the wiper at the following speed:

1. Intermittent (INT) — intermittent operation can be adjusted by turning the knob toward Ⓐ (slower) or Ⓑ (faster)
2. Low (LO) — continuous low speed operation
3. High (HI) — continuous high speed operation

Push the lever up ④ to have one sweep operation (MIST) of the wiper.

Pull the lever toward you ⑤ to operate the washer. The wiper will also operate several times.

⚠ WARNING

In freezing temperatures the washer solution may freeze on the windshield and obscure your vision which may lead to an accident. Warm the windshield with the defroster before you wash the windshield.

⚠ CAUTION

- **Do not operate the washer continuously for more than 30 seconds.**
- **Do not operate the washer if the reservoir tank is empty.**

OUTSIDE MIRROR DEFROSTER SWITCH (if so equipped)

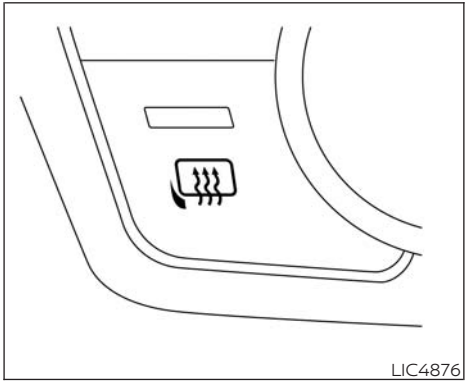

To defrost the outside mirrors, start the engine and push the outside mirror defroster switch on. The indicator light on the switch will illuminate. Push the switch again to turn the defroster off.

The defroster automatically turns off after approximately 15 minutes.

HEADLIGHT AND TURN SIGNAL SWITCH

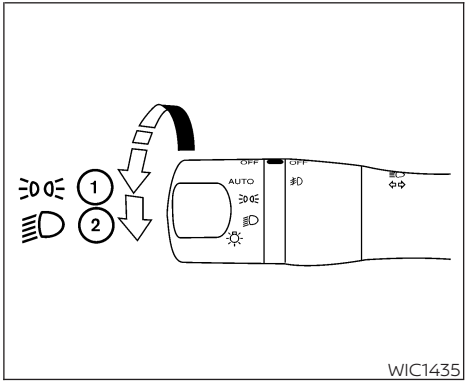

Type A (if so equipped)

HEADLIGHT CONTROL SWITCH

Basic Information

Lighting

① Rotate the switch to the position, and the front parking, tail, license plate, and instrument panel lights will come on.

② Rotate the switch to the position, and the headlights will come on and all the other lights remain on.

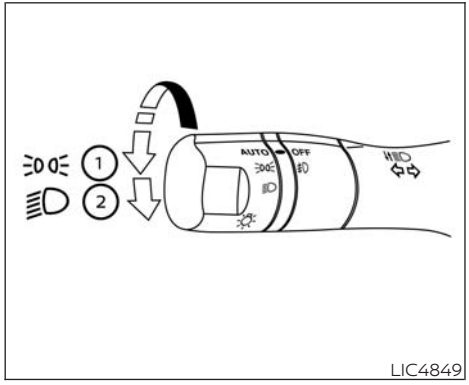

Type B (if so equipped)

⚠ CAUTION

Use the headlights with the engine running to avoid discharging the vehicle battery.

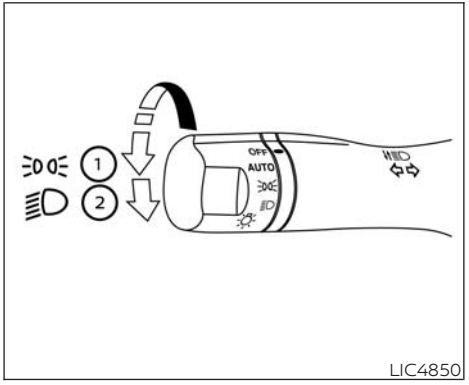

Type C (if so equipped)

Autolight system

The autolight system allows the headlights to be set so they turn on and off automatically. The autolight system can:

- Turn on the headlights, front parking, tail, license plate and instrument panel lights automatically when it is dark.
- Turn off all the lights when it is light.
- Keep all the lights on for a period of time after you place the ignition switch in the OFF position and all doors are closed.

To turn on the autolight system:

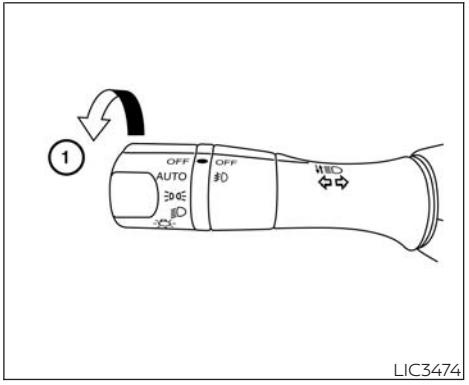

1. **For USA:** Turn the headlight switch to the AUTO position ①.

   For CAN: Turn the headlight switch to the AUTO ① or position.

2. Place the ignition switch in the ON position.
3. The autolight system automatically turns the headlights on and off.

Initially, if the ignition switch is placed in the OFF position and a door is opened and left open, the headlights remain on for a period of time. If another door is opened while the headlights are on, then the timer is reset.

To turn the autolight system off:

For USA: Turn the switch to the OFF, , or position.

For CAN: Turn the switch to the position.

The headlights will turn on automatically at twilight (if so equipped) or in rainy weather (when the windshield wiper is operated continuously).

If the ignition switch is pushed to the OFF position and one of the doors is opened and this condition is continued, the headlights remain on for 5 minutes.

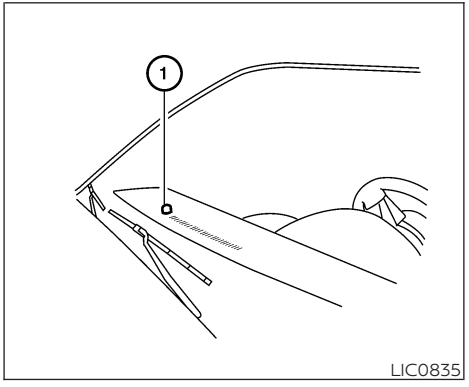

LIC0835

Be sure you do not put anything on top of the autolight sensor ① located in the top side of the instrument panel. The autolight sensor controls the autolight; if it is covered, the autolight sensor reacts as if it is dark out and the headlights will illuminate. If this occurs while parked with the engine off and the switch in the ON position, your vehicle's battery could become discharged.

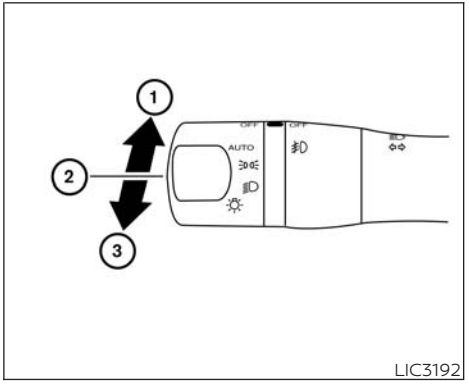

LIC3192

Headlight beam select

① To select the high beam function, engage the headlights, and push the lever forward. The high beam lights come on and the light illuminates. For additional information, see "Headlight control switch" (P. 148).

② Pull the lever back to return to the low beam.

③ Pulling and releasing the lever flashes the headlight high beams on and off; the headlights need not be on for this function.

High Beam Assist

Basic Information

The High Beam Assist system will operate when the vehicle is driven at speeds of approximately 25 mph (40 km/h) and above. If an oncoming vehicle or leading vehicle appears in front of your vehicle when the headlight high beam is on, the headlight will be switched to the low beam automatically.

⚠ WARNING

- **The High Beam Assist system is a convenience but it is not a substitute for safe driving operation. The driver should remain alert at all times, ensure safe driving practices and switch the high beams and low beam manually when necessary.**
- **The high beam or low beam may not switch automatically under the following conditions. Switch the high beam and low beam manually.**
  - **During bad weather (rain, fog, snow, wind, etc.).**
  - **When a light source similar to a headlight or tail light is in the vicinity of the vehicle.**
  - **When the headlights of the oncoming vehicle or the leading vehicle are turned off, when the color of the light is affected due to foreign materials on the lights, or when the light beam is out of position.**
  - **When there is a sudden, continuous change in brightness.**
  - **When driving on a road that passes over rolling hills or a road that has level differences.**
  - **When driving on a road with many curves.**
  - **When a sign or mirror-like surface is reflecting intense light towards the front of the vehicle.**
  - **When the container, etc., being towed by a leading vehicle is reflecting intense light.**
  - **When a headlight on your vehicle is damaged or dirty.**
  - **When the vehicle is leaning at an angle due to a punctured tire, being towed, etc.**
- **The timing of switching the low beam and high beam may change under the following situations:**
  - **The brightness of the headlights of the oncoming vehicle or leading vehicle.**
  - **The movement and direction of the oncoming vehicle and the leading vehicle.**
  - **When only one light on the oncoming vehicle or the leading vehicle is illuminated.**
  - **When the oncoming vehicle or the leading vehicle is a two-wheeled vehicle.**
  - **Road conditions (incline, curve, the road surface, etc.).**
  - **The number of passengers and the amount of luggage.**

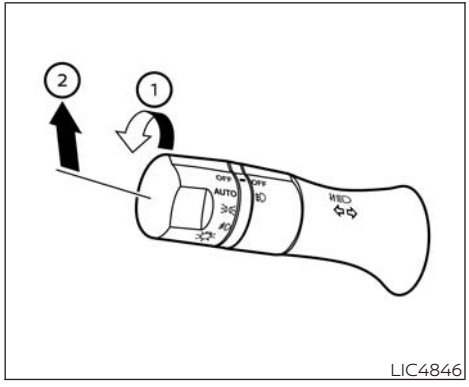

LIC4846

High Beam Assist operation

To activate the High Beam Assist system, turn the headlight switch to the AUTO position ① and push the lever forward ② (high beam position). The High Beam Assist indicator light in the meter will illuminate while the headlights are turned on.

If the High Beam Assist indicator light does not illuminate in the above condition, it may indicate that the system is not functioning properly. Have the system checked, it is recommended that you visit a NISSAN dealer for this service.

When the vehicle speed lowers to less than approximately 16 mph (25 km/h), the headlight uses the low beam.

To turn off the High Beam Assist system, turn the headlight switch to the position or select the low beam position by placing the lever in the neutral position.

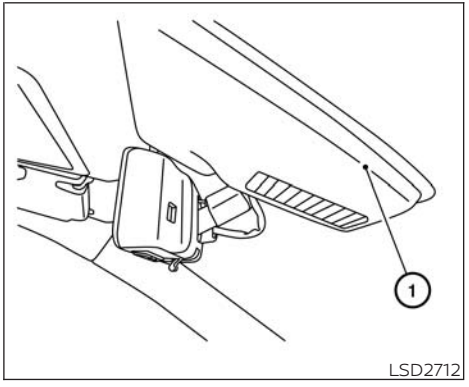

LSD2712

Ambient image sensor maintenance

The ambient image sensor ① for the High Beam Assist system is located in front of the inside mirror. To maintain the proper operation of the high beam assist system and prevent a system malfunction, be sure to observe the following:

- Always keep the windshield clean.
- Do not attach a sticker (including transparent material) or install an accessory near the ambient image sensor.
- Do not strike or damage the areas around the ambient image sensor. Do not touch the sensor lens that is located on the ambient image sensor.

If the ambient image sensor is damaged due to an accident, it is recommended that you visit a NISSAN dealer.

Battery saver system

The battery saver system automatically turns off the following lights after a period of time when the ignition switch is placed in the OFF position and the doors are closed:

- Headlights, when the headlight switch is in the or position
- Interior lights, when left in the ON position (if so equipped)

After the headlights automatically turn off with the headlight switch in the or position, the headlights will illuminate again if the headlight switch is moved to the OFF position and then turned to the or position.

CAUTION

Even though the battery saver feature automatically turns off the headlights after a period of time, you should turn the headlight switch to the OFF position when the engine is not running to avoid discharging the vehicle battery.

DAYTIME RUNNING LIGHTS (DRL) SYSTEM (Type A) (if so equipped)

The DRL system automatically illuminates when the engine is started with the parking brake released. The DRL system operates with the headlight switch in the OFF position or in the position, or in AUTO position when there is bright ambient light. Turn the headlight switch to the position for full illumination when driving at night.

If the parking brake is applied before the engine is started, the DRL system does not illuminate. The DRL system illuminates when the parking brake is released. The DRL system will remain on until the ignition switch is placed in the OFF position.

WARNING

When the DRL system is active, tail lights on your vehicle are not on. It is necessary at dusk to turn on your headlights. Failure to do so could cause an accident injuring yourself and others.

LED DAYTIME RUNNING LIGHTS (DRL) SYSTEM (Type B) (if so equipped)

The LED DRL automatically illuminate at 100% intensity when the engine is started and the parking brake released. The LED DRL operate with the headlight switch in the OFF position or in the position, or in AUTO position when there is bright ambient light. When you turn the headlight switch to the position for full illumination, the LED lights switch from LED DRL to the park function.

If the parking brake is applied before the engine is started, the LED DRL do not illuminate. The LED DRL illuminate when the parking brake is released. The LED DRL will remain on until the ignition switch is placed in the OFF position.

It is necessary at dusk to turn the headlight switch on for interior controls and switches to illuminate, as those remain off while the switch is in the OFF position.

⚠ WARNING

When the LED DRL system is active, tail lights on your vehicle are not on. It is necessary at dusk to turn on your headlights. Failure to do so could cause an accident injuring yourself and others.

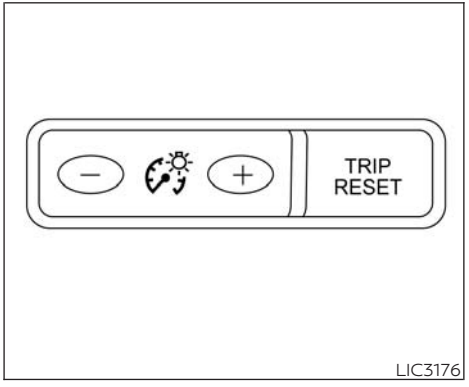

LIC3176

INSTRUMENT BRIGHTNESS CONTROL

Press the "+" button to increase the brightness of instrument panel lights.

Press the "-" button to decrease the brightness of instrument panel lights.

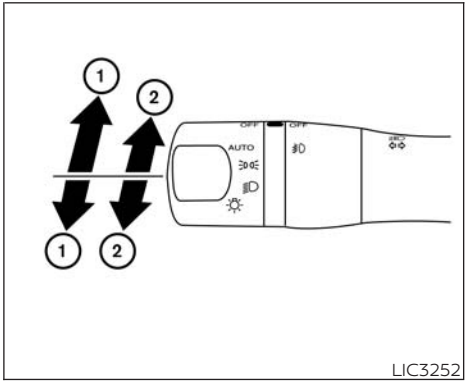

LIC3252

TURN SIGNAL SWITCH

Turn signal:

① Move the lever up or down to signal the turning direction. When the turn is completed, the turn signal cancels automatically.

Lane change signal:

② Move the lever up or down until the turn signal begins to flash, but the lever does not latch, to signal a lane change. Hold the lever until the lane change is complete.

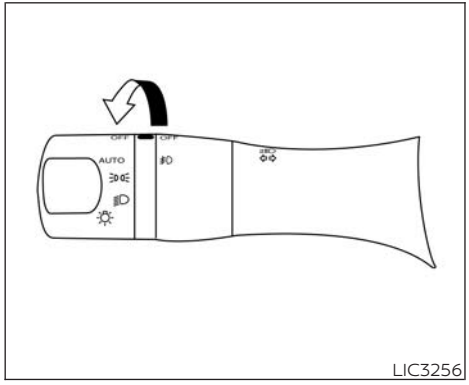

LIC3256

FOG LIGHT SWITCH (if so equipped)

To turn the fog lights on, turn the headlight switch to the position, then turn the fog light switch to the position.

To turn the fog lights on with the headlight switch in the AUTO position (if so equipped), the headlights must be on, then turn the fog light switch to the position.

To turn the fog lights off, turn the fog light switch to the OFF position.

The headlights must be on and the low beams selected for the fog lights to operate. The fog lights automatically turn off when the high beam headlights are selected.

HORN

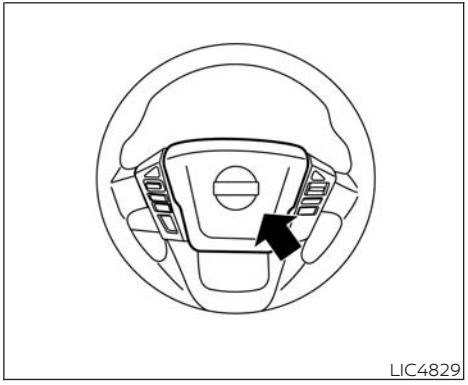
LIC4829

To sound the horn, push the area between the horn icons on the steering wheel.

⚠ WARNING

Do not disassemble the horn. Doing so could affect proper operation of the supplemental front air bag system. Tampering with the supplemental front air bag system may result in serious personal injury.

CARGO LAMP SWITCH

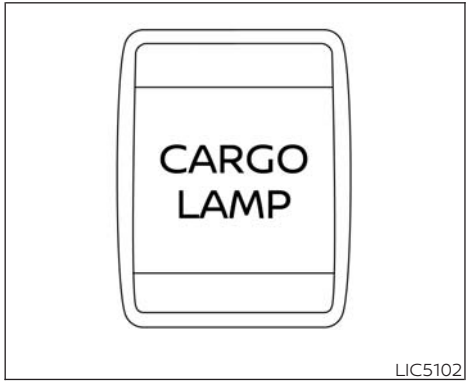

LIC5102

To turn on the cargo lamp, push the switch down to the ON position.

⚠ CAUTION

Be sure to turn the light switch to the OFF position when you leave the vehicle for extended periods of time, otherwise the battery will go dead.

HEATED SEAT SWITCHES (if so equipped)

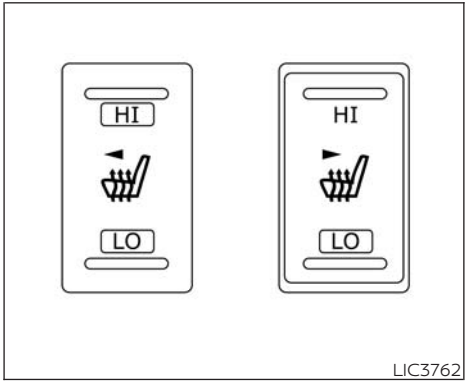

LIC3762

The front seats are warmed by built-in heaters.

1. Place the ignition switch in the ON position.
2. Push the LO or HI position of the switch, as desired, depending on the temperature. The indicator light in the switch will illuminate.

   The heater is controlled by a thermostat, automatically turning the heater on and off. The indicator light will remain on as long as the switch is on.
3. When the seat is warmed or before you leave the vehicle, be sure to turn the switch off.

⚠ WARNING

Do not use or allow occupants to use the seat heater if you or the occupants cannot monitor elevated seat temperatures or have an inability to feel pain in body parts that contact the seat. Use of the seat heater by such people could result in serious injury.

⚠ CAUTION

- **Do not use the seat heater for extended periods or when no one is using the seat.**
- **Do not put anything on the seat which insulates heat, such as a blanket, cushion, seat cover, etc. Otherwise, the seat may become overheated.**
- **Do not place anything hard or heavy on the seat or pierce it with a pin or similar object. This may result in damage to the heater.**

- **Any liquid spilled on the heated seat should be removed immediately with a dry cloth.**
- **When cleaning the seat, never use gasoline, benzine, thinner, or any similar materials.**
- **If any malfunctions are found or the heated seat does not operate, turn the switch off and have the system checked. It is recommended that you visit a NISSAN dealer for this service.**
- **The battery could run down if the seat heater is operated while the engine is not running.**

HEATED STEERING WHEEL SWITCH (if so equipped)

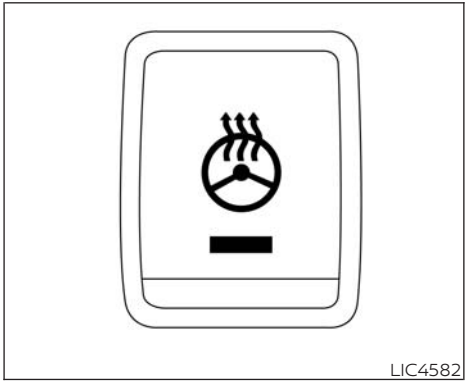

The heated steering wheel system is designed to operate only when the surface temperature of the steering wheel is below 68°F (20°C).

Push the heated steering wheel switch to warm the steering wheel after the engine starts. The indicator light will come on.

If the surface temperature of the steering wheel is below 68°F (20°C), the system will heat the steering wheel and cycle off and on to maintain a temperature above 68°F (20°C). The indicator light will remain on as long as the system is on.

Push the switch again to turn the heated steering wheel system off manually. The indicator light will go off. The switch will turn off automatically 30 minutes after activation, once this happens the switch will need to be pushed again to restart the cycle.

NOTE:

If the surface temperature of the steering wheel is above 68°F (20°C) when the switch is turned on, the system will not heat the steering wheel. This is not a malfunction.

VEHICLE DYNAMIC CONTROL (VDC) OFF SWITCH

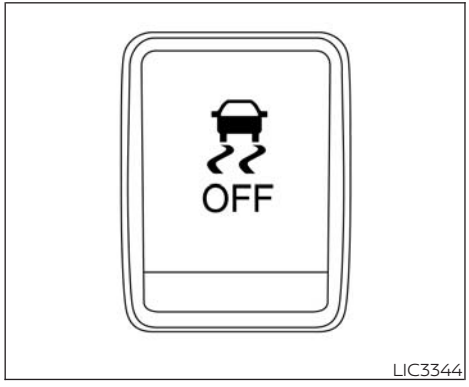

LIC3344

The vehicle should be driven with the VDC system on for most driving conditions.

If the vehicle is stuck in mud or snow, the VDC system reduces the engine output to reduce wheel spin. The engine speed will be reduced even if the accelerator is depressed to the floor. If maximum engine power is needed to free a stuck vehicle, turn the VDC system off.

To turn off the VDC system, push the VDC OFF switch. The indicator light will come on.

Push the VDC OFF switch again or restart the engine to turn on the system. For additional information, see "Vehicle Dynamic Control (VDC) system" (P. 387).

HILL DESCENT CONTROL SWITCH (if so equipped)

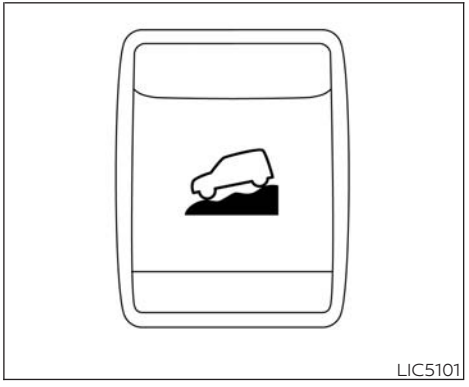
LIC5101

WARNING

- **Never rely solely on the hill descent control system to control vehicle speed when driving on steep downhill grades. Always drive carefully when using the hill descent control system and decelerate the vehicle speed by depressing the brake pedal if necessary. Be especially careful when driving on frozen, muddy or extremely steep downhill roads. Failure to control vehicle speed may result in a loss of control of the vehicle and possible serious injury or death.**

- **The hill descent control may not control the vehicle speed on a hill under all load or road conditions. Always be prepared to depress the brake pedal to control vehicle speed. Failure to do so may result in a collision or serious personal injury.**

⚠ CAUTION

When the hill descent control system operates continuously for a long time, the temperature of the brake pads may increase and the hill descent control system may be temporarily disabled (the indicator light will blink). If the indicator light does not come on continuously after blinking, stop using the system.

The hill descent control system is designed to reduce driver workload when going down steep hills. The hill descent control system helps to control vehicle speed so the driver can concentrate on steering the vehicle.

To activate the hill descent control system:

- The shift lever must be in forward or reverse gear,
- The 4WD switch must be in the 4L position and the vehicle speed must be under 15 mph (25 km/h) or
- The 4WD switch must be in the 4H position and the vehicle speed must be under 21 mph (35 km/h), and
- The hill descent control system switch must be ON.

The hill descent control system ON indicator light will come on when the system is activated. Also, the stop/tail lights illuminate while the hill descent control system applies the brakes to control vehicle speed.

If the accelerator or brake pedal is depressed while the hill descent control system is on, the system will stop operating temporarily. As soon as the accelerator or brake pedal is released, the hill descent control system begins to function again if the hill descent control operating conditions are fulfilled.

The hill descent control system ON indicator light blinks if the switch is on and all conditions for system activation are not met or if the system becomes disengaged for any reason.

To turn off the hill descent control system, push the switch to the OFF position.

For additional information, see "Hill descent control system ON indicator light" (P. 119) and "Hill descent control system" (P. 390).

WARNING SYSTEMS SWITCH

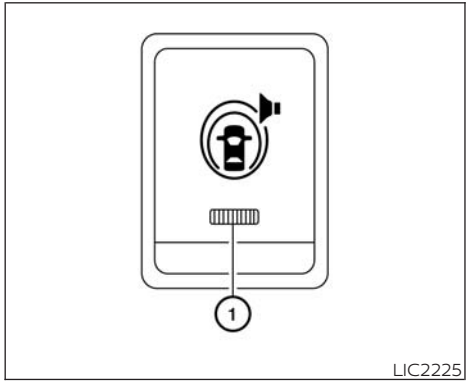

LIC2225

The warning systems switch is used to turn on and off the following systems that are activated using the Settings menu in the vehicle information display:

- Blind Spot Warning (BSW)
- Lane Departure Warning (LDW)

When the warning systems switch is turned off, the indicator ① on the switch is off. The indicator will also be off if all of the warning systems are deactivated using the settings menu.

The BSW system will turn on the side indicator lights, located by the outside mirrors, if the radar sensors detect a vehicle in the detection zone. If the turn signal is activated in the direction of the detected vehicle, a chime sounds twice and the side indicator light will flash.

The LDW system will sound a warning; the steering wheel will vibrate; and the LDW indicator (orange) will blink to alert the driver of the vehicle is traveling close to either the left or the right of a traveling lane with detectable lane markers.

For additional information, see "Blind Spot Warning (BSW)" (P. 301) and "Lane Departure Warning (LDW)" (P. 296).

ELECTRONIC LOCKING REAR DIFFERENTIAL (E-Lock) SYSTEM SWITCH (if so equipped)

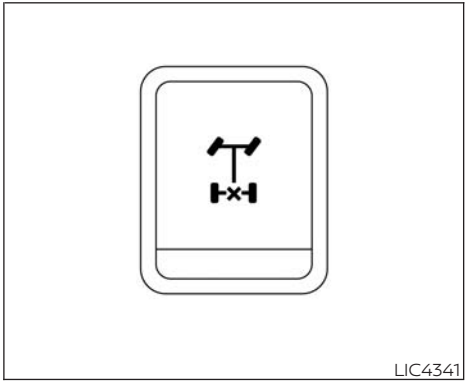
LIC4341

The E-Lock system can help provide added traction if the vehicle is stuck or becoming stuck.

To activate the E-Lock system:

- The 4WD switch must be in the 4LO position (4-Wheel Drive vehicles),
- The vehicle must be stopped or moving at 4 mph (7 km/h) or less, and
- The E-Lock system switch must be turned on.

When the E-Lock switch is turned on, the indicator light will flash until the system engages. However, if all operation conditions listed above are not met or the system becomes disengaged, the indicator light will continue to flash.

The Anti-lock Braking System (ABS) is disabled and the ABS light illuminates when the E-Lock system is on. Also, the Vehicle Dynamic Control (VDC) system is disabled and the VDC light illuminates when the E-Lock system is on.

For additional information, see "Electronic locking rear differential (E-Lock) system" (P. 382) for further explanation and system limitations.

⚠ WARNING

- **Never leave the E-Lock system on when driving on paved or hard-surfaced roads. Turning the vehicle may result in the rear wheels slipping and result in an accident and personal injury. After using the E-Lock system to free the vehicle, turn the system off.**
- **Use the E-Lock system only when freeing a stuck vehicle. Try the 4LO position before using the E-Lock system. Never use the E-Lock system on a slippery road surface such as snow or ice surface. Using the E-Lock system when driving in these road conditions may cause unexpected movement of the vehicle during engine braking, accelerating or turning, which may result in an accident and serious personal injury.**

⚠ CAUTION

- **After using the E-Lock system, turn the switch off to prevent possible damage to driveline components from extended use.**
- **Do not drive over 12 mph (20 km/h) when the system is engaged. Doing so could result in possible damage to the driveline.**
- **Do not turn on the E-Lock system while the tires are spinning. Doing so could damage drivetrain components.**

POWER INVERTER SWITCH (if so equipped)

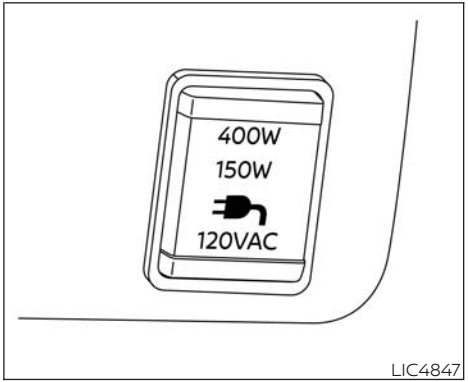

LIC4847

To use the outlets for devices that require up to 120v power, the vehicle must be running and the power inverter switch must be on.

When the vehicle is in the P (Park) position, the 400W and the 150W will automatically illuminate. When the vehicle is out of the P (Park) position, only 150W will illuminate.

For additional information, see "120v outlets" (P. 170) regarding using devices that require the power inverter switch to be activated.

⚠ CAUTION

- **Use power outlets with the engine running to avoid discharging the vehicle battery.**
- **Do not use double adapters or more than one electrical accessory, doing so could significantly drain the battery of your vehicle.**

PARKING AIDS SYSTEM SWITCH (if so equipped)

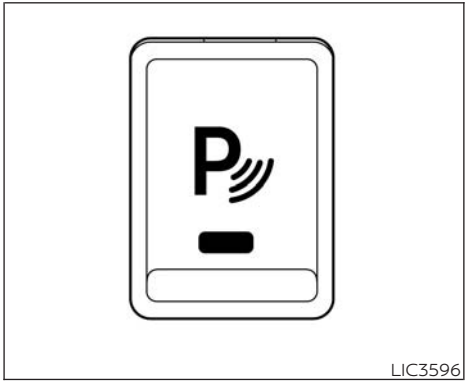

LIC3596

The Parking Aids system switch on the instrument panel allows the driver to turn the following systems (if so equipped) on and off. To turn the systems on and off, the ignition switch must be in the ON position.

- Rear Sonar System (RSS)
- Moving Object Detection (MOD) (if so equipped)
- Rear Automatic Braking (RAB)
- Rear Cross Traffic Alert (RCTA)

The indicator light on the switch will illuminate when the systems are turned on.

If the indicator light flashes when the RSS, MOD, RAB, or RCTA systems are not turned off, it may indicate a malfunction in one or more of these systems (if so equipped).

The RSS, MOD, RAB, or RCTA systems will be turned on automatically under the following conditions:

- When the ignition switch is switched from the OFF position to the ON position.
- When the shift lever is shifted into the R (Reverse) position.

The automatic turning on function can be turned on and off for these systems in the vehicle information display. For additional information, see "Settings" (P. 130).

For additional information, see "Rear Sonar System (RSS)" (P. 391), "Rear Automatic Braking (RAB)" (P. 342), "Rear Cross Traffic Alert (RCTA)" (P. 311), or "Moving Object Detection (MOD)" (P. 248).

TOW MODE SWITCH (if so equipped)

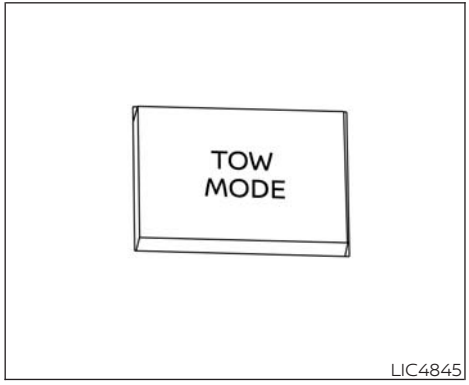

Tow mode should be used when pulling a heavy trailer or hauling a heavy load. Driving the vehicle in the tow mode with no trailer/load or light trailer/light load will not cause any damage. However, fuel economy may be reduced, and the transmission/engine driving characteristics may feel unusual.

Push the tow mode switch to activate tow mode. The TOW mode ON indicator light illuminates when tow mode is selected. Push the tow mode switch again to turn tow mode off.

Tow mode is automatically canceled when the ignition switch is placed in the OFF position.

For additional information, see "Towing a trailer" (P. 526).

EMERGENCY CALL (SOS) BUTTON (if so equipped)

EMERGENCY SUPPORT

Basic Information

NissanConnect® Services provide various services to support dealing with emergencies of the subscribed vehicle and the driver.

For example, in case of an illness or serious injury, you can seek support by pressing the in-vehicle Emergency Call (SOS) button and connecting to the NissanConnect® Services Response Center. The NissanConnect® Services Response Center can specify the location of the vehicle via GPS, and the information will be sent to the police or other agencies as needed.

For information about other NissanConnect® Services emergency support related services, contact the NissanConnect® Customer Support line at 1-855-426-6628 or refer to the NissanConnect® Services website www.nissanusa.com/connect (for U.S.) or www.nissan.ca/nissanconnect (English) / www.nissan.ca/nissanconnect/fr (French) (for Canada).

⚠ WARNING

- **Please note that the Automatic Collision Notification service and Emergency Call function cannot be used in the following conditions:**
  - **Emergency functions and services will not be available without a paid subscription to NissanConnect® Services.**
  - **The NissanConnect® Services network system is disabled.**
  - **The vehicle moves outside the service area where the TCU (Telematics Control Unit) is connected to the system.**
  - **The vehicle is outside the area where the cellular network service is receivable.**
  - **The vehicle is in a location with poor signal reception such as tunnels, underground parking garages, behind buildings or in mountainous areas.**
  - **The line is busy.**
  - **The TCU (Telematics Control Unit) or other systems of your vehicle are not working properly.**
  - **It may not be possible to make an emergency call depending on the severity of a collision and/or emergency.**
- **Park the vehicle in a safe location and set the parking brake before operating the Emergency Call (SOS) button.**
- **Only use this service in case of an emergency. There may be a penalty for inappropriate use of the service.**
- **Radio waves could adversely affect electric medical equipment. Individuals who use a pacemaker should contact the device manufacturer regarding any possible effects before using the system.**
- **The TCU (Telematics Control Unit) antenna is installed inside the upper central part of the instrument panel. An occupant should not get any closer to the antenna than specified by the pacemaker manufacturer. The radio waves from the TCU antenna may adversely affect the operation of the pacemaker while using the NissanConnect® Services.**

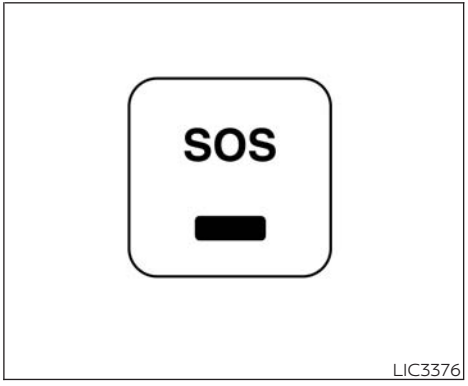

Making an emergency call

The Emergency Call (SOS) button is located near the map light.

1. Press the Emergency Call (SOS) button to make an emergency call.
2. When the line is connected, speak to the Response Specialist.

If you want to cancel the emergency call, press and hold the Emergency Call (SOS) button for a few seconds.

NOTE:

- **After the Emergency Call (SOS) button is pressed, it may take some time until the system initiates connection, depending on the technical environment and whether the TCU (Telematics Control Unit) is being used by the other services.**
- **An indicator light on the Emergency call (SOS) button shows the readiness of the emergency support system. If the indicator light is not illuminated, pressing the Emergency Call (SOS) button does not connect your vehicle to the Response Specialist. The indicator light blinks while connected to the NissanConnect® Services Response Center.**
- **Even when the indicator light is illuminated, connection to the NissanConnect® Services Response Center may not be possible. If this occurs in an emergency situation, contact the authorities by other means.**
- **To avoid disconnecting the line, keep the engine running during an emergency call, if it is safe to do so.**

USB CHARGING PORTS (if so equipped)

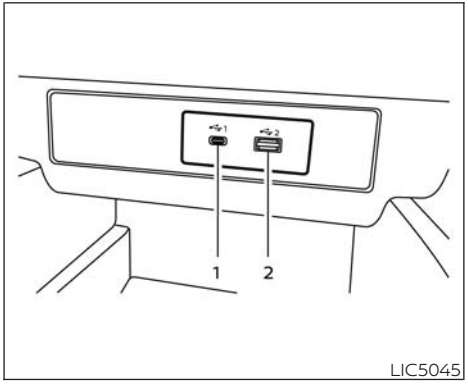

1st row (if so equipped)

1. Type-C USB
2. Type-A USB

There are USB charging ports located in 1st row in the front media pocket below the climate controls and in the rear seat area on the back of the center console (if so equipped). These ports will charge compatible devices.

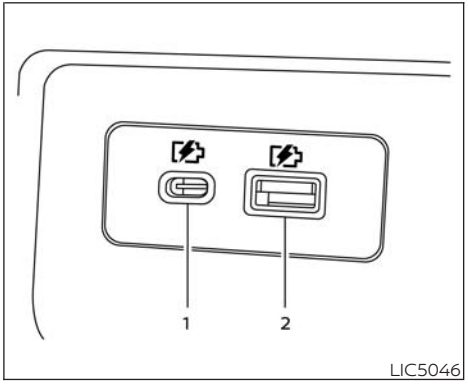

Rear (if so equipped)

NOTE:

- **Not all of the USB charging ports will operate with the display screen. Only the USB connection ports located under the climate controls will allow operation of USB devices through the audio system.**
- **For best results, it is recommended to use the manufacturer cables, which are sold separately. A USB Type-A to USB Type-C adapter (or vice versa) can also be purchased separately; however, results may vary.**

⚠ CAUTION

- **Do not force a USB device into the connector. Inserting the USB device tilted or up-side down into the connector may damage the connector. Make sure that the USB device is connected correctly into the connector.**
- **Do not use a reversible USB cable. Using the reversible USB cable may damage the connector.**

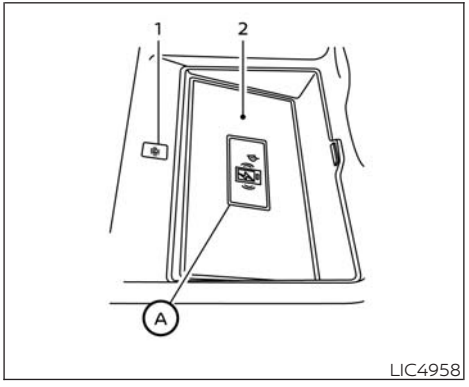

1. Indicator
2. Charging pad

BASIC INFORMATION

The wireless charger is located on the front of the center console. Lay the smartphone on the pad of the wireless charger. Charging will start automatically. The smartphone will be charged continuously while the ignition switch is in the ON position.

NOTE:

The wireless charger requires the vehicle doors to be closed before charging will start. If the doors are opened, the charging function will not operate.

⚠ WARNING

- **Never put metallic materials between the wireless charger and a smartphone.**
- **Those who use a pacemaker or other medical equipment should contact the electric medical equipment manufacturer for the possible influences before use.**
- **Never put cloth over the smartphone during charging process.**
- **Never charge a smartphone when it is wet.**
- **Never put metallic materials or small goods such as a cigarette lighter, Intelligent Key or memory drive.**

⚠ CAUTION

- **Do not put an RFID/NFC/credit card between the wireless charger and a smartphone. This could cause data corruption in the card.**
- **Do not use the wireless charger with dust accumulated or dirt on the pad.**
- **Do not hit the surface of the wireless charger.**
- **Do not spill liquid (water, drinks, etc.) on the charging pad.**
- **Do not use grease, oil or alcohol for cleaning charging pad.**

Wireless charger indicator

The indicator (1) will illuminate in orange when the charging process is started.

When the charging has completed, the indicator illuminates in green.

If a malfunction occurs or the charging process has stopped, the indicator will blink in orange for 8 seconds then turn off.

Wireless charger operation

To use the wireless charger, it is necessary to seat the smartphone well within the charging pad. To maximize charging performance, ensure the smartphone is fully seated on the center of the charging pad over the "Qi" logo Ⓐ . Because the location of the power receiver may vary depending on the smartphone, you will need to try and find the area that suits your smartphone.

Because some smartphone cases or accessories may adversely affect charging, remove them before wireless charging. Turn off the vibration function of the smartphone before wireless charging.

NOTE:

- **Only a Qi compatible smartphone can be used.**
- **The smartphone may be warmed during charging process and the charging may stop by the protection function of the wireless charger. This is not a malfunction. If this occurs, restart charging after the smartphone has cooled down. The indicator will blink in orange then turn off.**
- **The wireless charging process may be stopped by the status of the smartphone (battery temperature, etc.).**
- **If a radio noise interference occurs during charging process, put the smartphone onto the center ("Qi" logo) position of the wireless charger.**
- **The wireless charging process will stop during process of searching the Intelligent Key.**
- **The wireless charging process will not be started when a USB (Universal Serial Bus) cable is connected to the smartphone. The indicator may illuminate in orange or blink if the smartphone is put on the wireless charger with a USB cable connected. However, charging is not performed.**
- **Depending on the type of the smartphone, the indicator may remain illuminated in orange even when the charging process has been completed.**

This device complies with part 15 of the FCC Rules and RSS-Gen of IC Rules.
Operation is subject to the following two conditions:
(1) This device may not cause harmful interference, and
(2) This device must accept any interference received, including interference that may cause undesired operation.
Changes or modifications not expressly approved by the party responsible for compliance could void the user's authority to operate the equipment.

RF Radiation Exposure Statement: This equipment complies with FCC RF Radiation exposure limits set forth for an uncontrolled environment.
This device and its antenna must not be co-located or operating in conjunction with any other antenna or transmitter.
This equipment should be installed and operated with a minimum distance of 15cm between the radiator and your body.
ISED Compliance Statement
This device complies with RSS-Gen of IC Rules
Operation is subject to the following two conditions:
(1) This device may not cause harmful interference, and
(2) This device must accept any interference received, including interference that may cause undesired operation.
Changes or modifications made to this device, not expressly approved by the party responsible for compliance, will void the user's authority to operate the equipment.

ISED RF Radiation Exposure Statement: This equipment complies with ISED RF Radiation exposure limits set forth for an uncontrolled environment. This device and its antenna must not be co-located or operating in conjunction with any other antenna or transmitter. This equipment should be installed to operate with a minimum distance of 15 cm between the radiator and the end-user's body and arms.

REAR DOOR ALERT

The Rear Door Alert system functions under certain conditions to indicate there may be an object or passenger in the rear seat(s). Check the seat(s) before exiting the vehicle.

The Rear Door Alert system is initially disabled. The driver can enable the system using the vehicle information display. For additional information, see "Vehicle information display warnings and indicators" (P. 137).

When the system is enabled:

- The system is activated when a rear door is opened and closed within 10 minutes of the vehicle being driven. When the driver' door is closed and the system is activated, a visual message appears in the vehicle information display. For additional information, see "Rear Door Alert is activated" (P. 139).
- If a rear door is opened and closed but the vehicle is not driven within approximately 10 minutes, the system will not be activated. A rear door must be opened and closed and the car driven within 10 minutes for the system to activate.

When the Rear Door Alert system is activated and a driver exits the vehicle after arriving at a destination:

- When the driver puts the vehicle in the P (Park) position, a message appears in the vehicle information display for a driver to "Dismiss Message" or "Disable Alert" if desired.
- With the system enabled, when the driver exits the vehicle, an audible alert (horn sound) will occur unless a rear door is opened and closed within a short time to deactivate the alert.
- If the doors are locked before the alert is deactivated by opening a rear door, the horn will sound.
- If the audible horn alert occurs, a message will also appear in the vehicle information display that states, "Check Rear Seat for All Articles".

⚠WARNING

- **If the driver selects "Disable Alert", no audible alert will be provided regardless of rear door open/close status.**
- **There may be times when there is an object or passenger in the rear seat(s) but the audible alert does not sound. For example, this may occur if rear seat passengers enter or exit the vehicle during a trip.**
- **The system does not directly detect objects or passengers in the rear seat(s). Instead, it can detect when a rear door is opened and closed, indicating that there may be something in the rear seat(s).**

NOTE:

There may be times when the horn sounds but there are no objects or passengers in the rear seat(s).

For additional information, see "Rear Door Alert is activated" (P. 139).

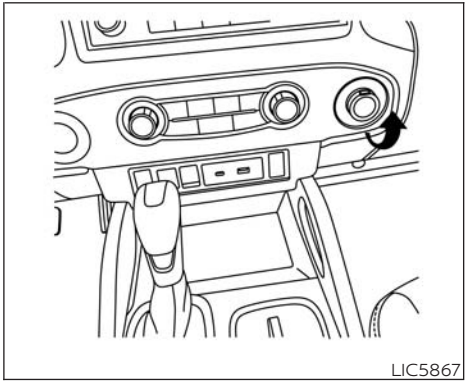

Instrument panel

12V OUTLETS

The power outlets are for powering electrical accessories such as cellular telephones.

The power outlet located on the instrument panel is powered only when the ignition switch is placed in the ACC or ON position.

Open the cap to use a power outlet.

⚠ CAUTION

- **The outlet and plug may be hot during or immediately after use.**
- **Only certain power outlets are designed for use with a cigarette lighter unit. Do not use any other power outlet for an accessory lighter. It is recommended that you visit a NISSAN dealer for additional information.**
- **Do not use with accessories that exceed a 12 volt, 120W (10A) power draw.**
- **Do not use double adapters or more than one electrical accessory.**
- **Use power outlets with the engine running to avoid discharging the vehicle battery.**
- **Avoid using power outlets when the air conditioner, headlights, or rear window defroster (if so equipped) is on.**
- **Before inserting or disconnecting a plug, be sure the electrical accessory being used is turned OFF.**
- **Push the plug in as far as it will go. If good contact is not made, the plug may overheat or the internal temperature fuse may open.**
- **When not in use, be sure to close the cap. Do not allow water or any other liquid to contact the outlet.**

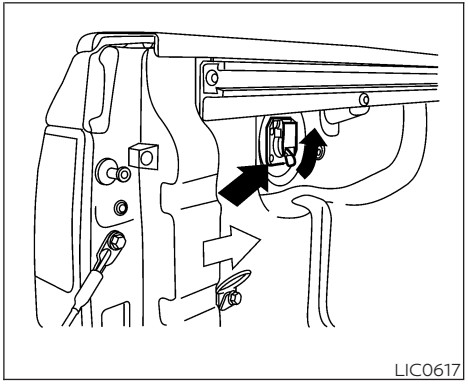

In truck box (if so equipped)

120V OUTLETS (if so equipped)

WHAT IS PLUGGED IN	Indicator	Inverter Status
Shifter in Park		
No Device but Switch On	150W and 400W	ON
Device < 150W	150W and 400W	ON
150W < Device < 400W	150W and 400W	ON
Device>400W	OFF	OFF

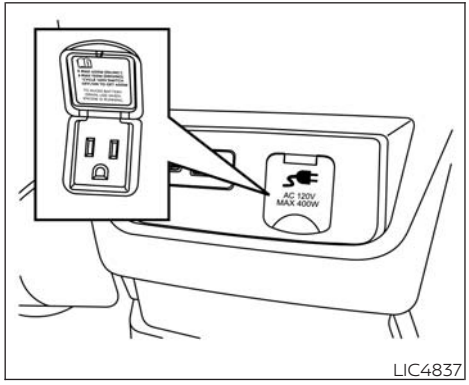

Center console (if so equipped)

WHAT IS PLUGGED IN	Indicator	Inverter Status
Shifter Out of Park		
No Device but Switch On	150W	ON
Device < 150W	150W	ON
150W < Device < 400W	OFF	OFF
Device > 400W	OFF	OFF

WHAT IS PLUGGED IN	Indicator	Inverter Status
Shifter Back in Park		
No Device but Switch On	150W and 400W	ON
Device < 150W	150W and 400W	ON
150W < Device < 400W	150W and 400W	ON
Device > 400W	OFF	OFF
SWITCH RESET		
Shifter in Park		
No Device but Switch On	150W and 400W	ON
Device < 150W	150W and 400W	ON
150W < Device < 400W	150W and 400W	ON
Device > 400W	OFF**	OFF**

WHAT IS PLUGGED IN	Indicator	Inverter Status
Shifter out of Park		
No Device but Switch On	150W	ON
Device < 150W	150W	ON
150W < Device < 400W	OFF**	OFF**
Device > 400W	OFF**	OFF**

** OFF means the inverter system cannot be reset until a device is within the specification range of operation. If the device is greater than specified, the inverter will shut OFF. The operating voltage is between 11.5v and 15v. If the vehicle is not idling, the battery voltage will drop which will cause the inverter to shut down when below 11.5v. When the vehicle is in the (P) Park position, it will work at 400W. If the vehicle is in any other shifter position, it will turn off.

Do not use the outlet located in the truck box with accessories that exceed 120 volt. Do not use double adapters or more than one electrical accessory.

EXTENDED STORAGE SWITCH

⚠ CAUTION

- **Operation of the 120 volt system with the ignition in the ON position and the engine not running (idle) will drain the battery charge. This could lead to a dead battery or no start condition.**
- **The outlet and plug may be hot during or immediately after use.**
- **Use power outlets with the engine running to avoid discharging the vehicle battery.**
- **Do not use double adaptors or more than one electrical accessory.**
- **Avoid using power outlets when the air conditioner, headlights or rear window defroster is on.**
- **Before inserting or disconnecting a plug, be sure the electrical accessory being used is turned OFF.**
- **Push the plug in as far as it will go. If good contact is not made, the plug may overheat or the internal temperature fuse may open.**
- **When not in use, be sure to close the cap. Do not allow water or any other liquid to contact the outlet.**

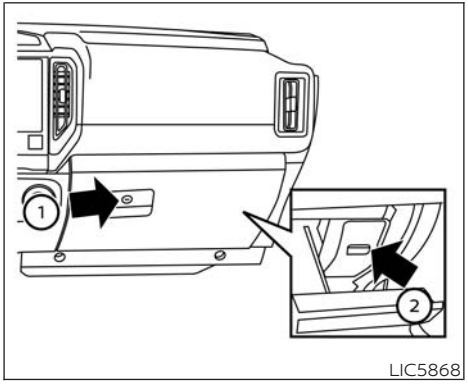

LIC5868

The extended storage switch is used when shipping the vehicle. It is located in the fuse panel inside the glove box. To reach it, open the glove box ① on the instrument panel, then open the fuse panel cover ②.

If any electrical equipment does not operate, ensure the extended storage switch is ON by pushing it fully in place, as shown.

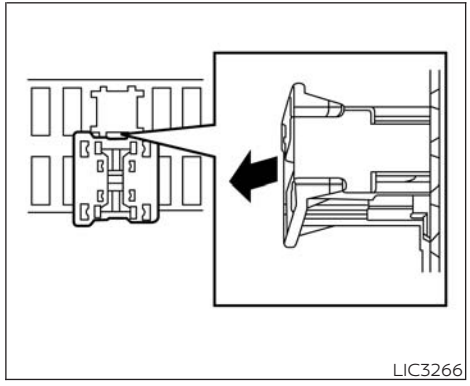
LIC3266

Pulled position

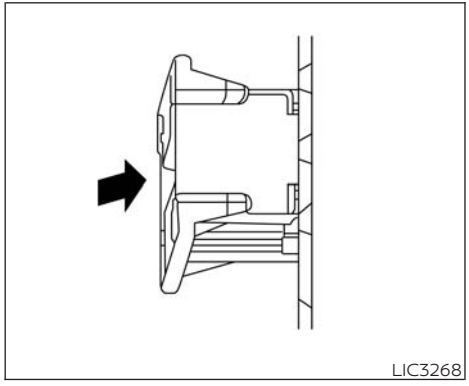

Pushed position

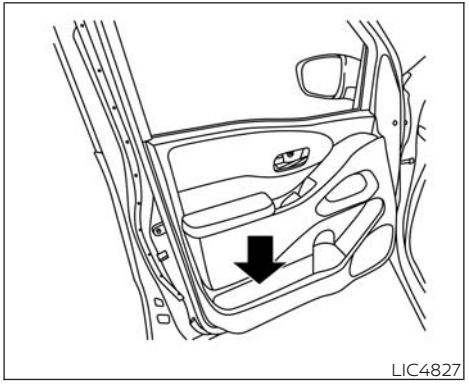

FRONT-DOOR POCKETS

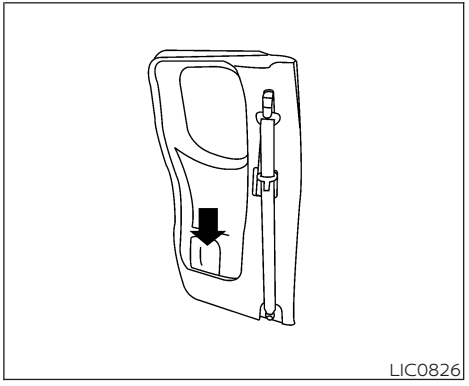

Type A (if so equipped)

REAR-DOOR POCKETS

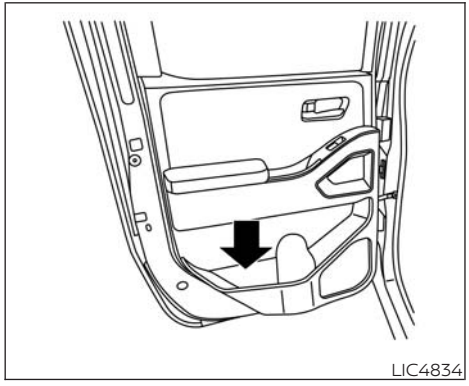

Type B (if so equipped)

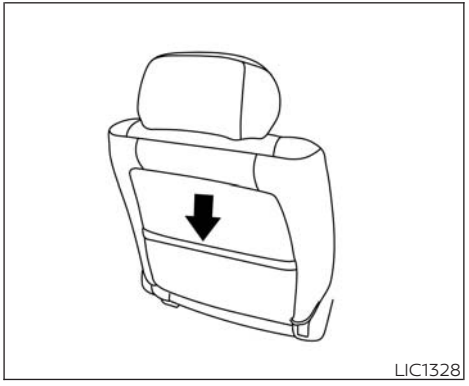

SEATBACK POCKET

A seatback pocket is located on the back of the passenger's seat. The pocket may be used to store maps.

⚠ WARNING

To ensure proper operation of the driver's and/or front passenger's NISSAN Advanced Air Bag System, please observe the following items:

- **Do not allow a passenger in the rear seat to push or pull on the seatback pocket or head restraint/headrest.**
- **Do not place heavy loads heavier than 9.1 lbs. (4 kg) on the seatback, head restraint/headrest or in the seatback pocket.**

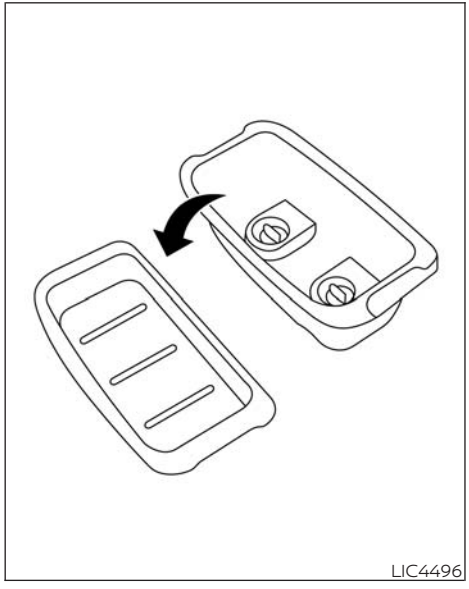

Rear row under-seat storage bin (King Cab® model)

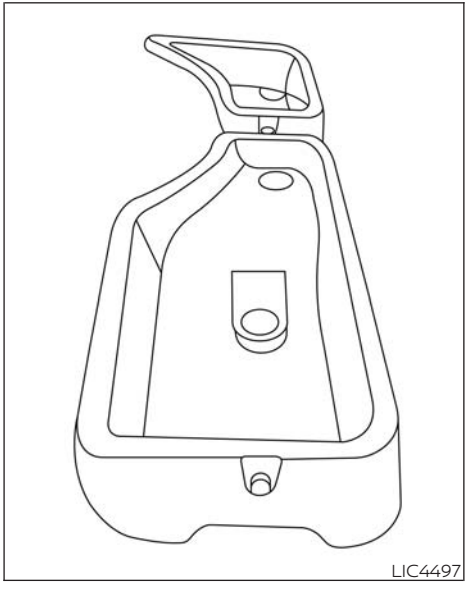

Rear row under-seat storage bin (Crew Cab model)

UNDER-SEAT STORAGE BINS (if so equipped)

⚠ WARNING

- **Properly secure all cargo with ropes or straps to help prevent it from sliding or shifting. In a sudden stop or collision, unsecured cargo could cause personal injury.**
- **The cargo restrained in the under-seat storage bins must not exceed the weight limits listed below or the bins may not stay secured. In a sudden stop or collision, the unsecured bins could cause personal injury.**
  King Cab® model: 16 lbs. (7.25 kg)
  Crew Cab model
  Driver's side: 16 lbs. (7.25 kg)
  Passenger's side: 25 lbs. (11.33 kg)
- **If the under-seat storage bins are removed for any reason, they should be securely stored to prevent them from causing injury to passengers or damage to the vehicle in case of sudden braking or an accident.**
- **Do not place sharp objects in the under-seat storage bins. Such objects may become dangerous projectiles and cause injury when the vehicle is moving or if the vehicle is involved in a collision.**

To access the under-seat storage bins:

For King Cab® models, lift up the jump seat. For additional information, see "Jump seat" (P. 17).

For Crew Cab models, lift up the rear bench seat. For additional information, see "Folding the rear bench seat up" (P. 18).

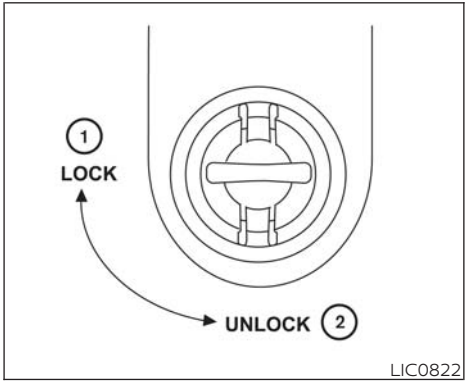

To remove the under-seat storage bins:

1. Turn the knobs to the UNLOCK position ②.
2. Remove the tray (if so equipped) by lifting it out of the storage bin (King Cab® model).

To install the under-seat storage bins:

1. Position the under-seat storage bin so the holes line up with the holes in the floorboard.
2. Insert the knobs and turn them to the LOCK position ①.

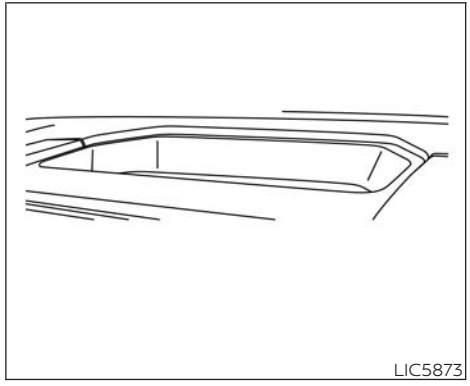

Top center tray (if so equipped)

STORAGE TRAYS

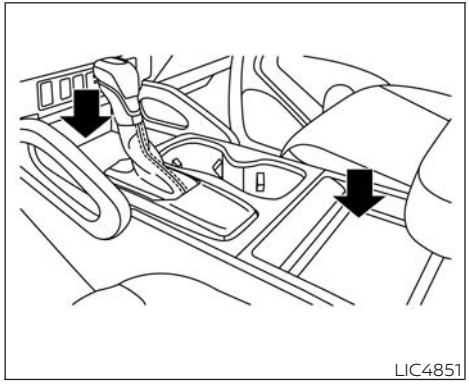

Center console (if so equipped)

⚠ WARNING

Do not place sharp objects in the trays to help prevent injury in an accident or sudden stop.

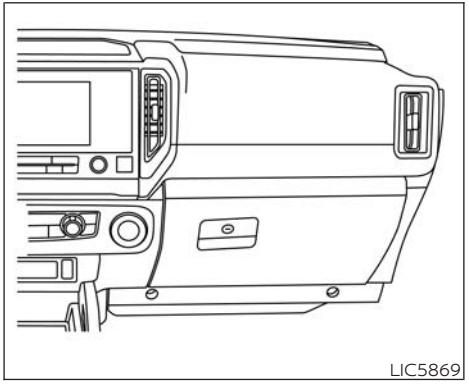

GLOVE BOX

Open the glove box by pulling the handle. Use the mechanical key (if so equipped) when locking or unlocking the glove box.

⚠ WARNING

Keep the glove box lid closed while driving to help prevent injury in an accident or a sudden stop.

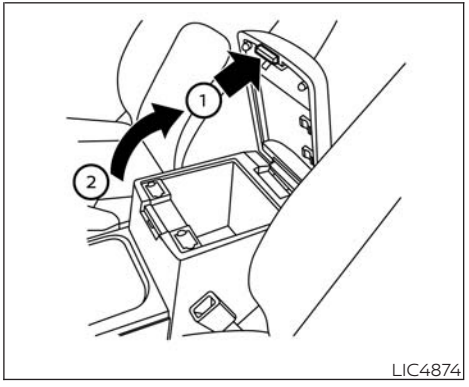

CONSOLE BOX

Pull up on the lever ① to open the console box lid ②.

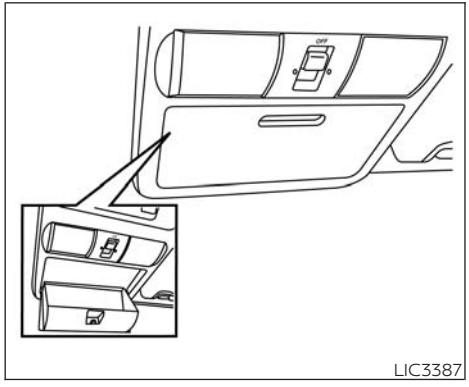

OVERHEAD SUNGLASSES STORAGE (if so equipped)

To open the sunglasses holder, push and release.

Only store one pair of sunglasses in the holder.

⚠ WARNING

Keep the sunglasses holder closed while driving to avoid obstructing the driver's view and to help prevent an accident.

⚠ CAUTION

- **Do not use for anything other than sunglasses.**
- **Do not leave sunglasses in the sunglasses holder while parking in direct sunlight. The heat may damage the sunglasses.**

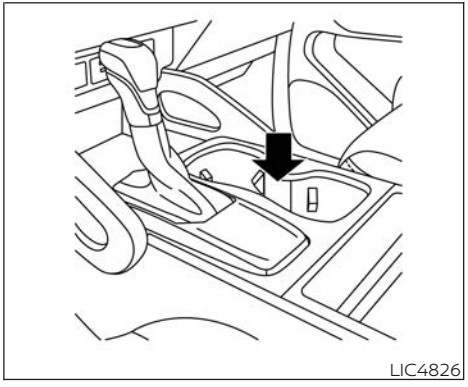

Front

CUP HOLDERS

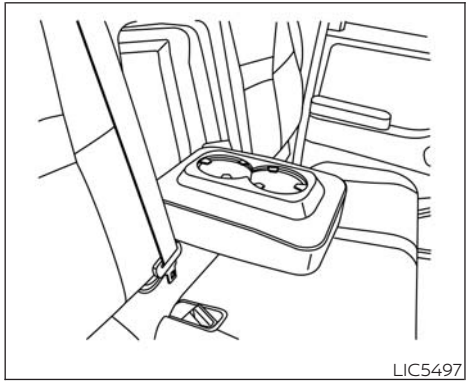

Rear seat (if so equipped)

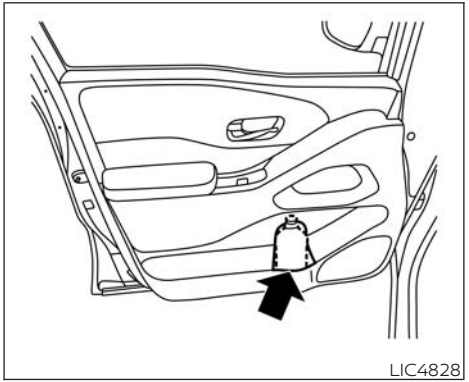

Front row bottle holders

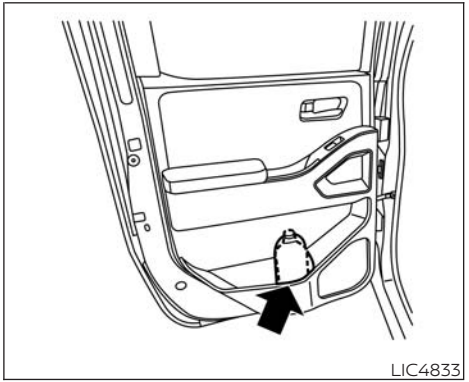

Rear bottle holders

⚠ CAUTION

- **Avoid abrupt starting and braking when the cup holder is being used to prevent spilling the drink. If the liquid is hot, it can scald you or your passenger.**
- **Use only soft cups in the cup holder. Hard objects can injure you in an accident.**

⚠ CAUTION

- **Do not use the bottle holder for any other objects that could be thrown about in the vehicle and possibly injure people during sudden braking or an accident.**
- **Do not use the bottle holder for open liquid containers.**

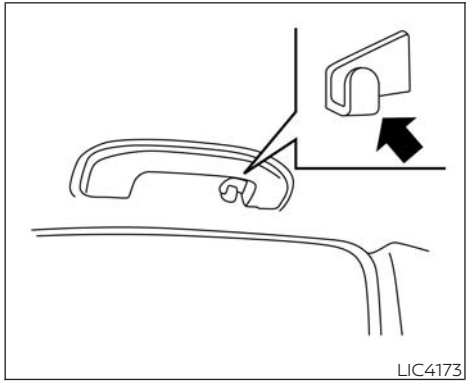

COAT HOOKS (if so equipped)

The coat hooks, located on the rear assist grips, may be used to store coats and other articles of clothing.

⚠ CAUTION

Do not apply more than 33 lbs. (15 kg) to the rear assist grip coat hook.

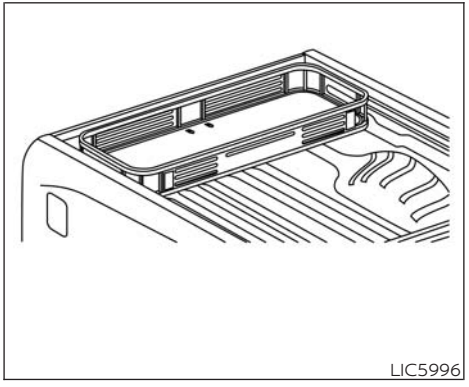

In cargo bed

CARGO CARRIER (if so equipped)

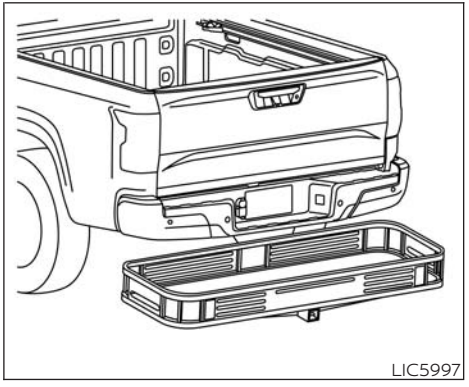

On towing hitch

The cargo carrier may be used in the cargo bed or attached to the towing hitch.

The max load capacity is 150 lbs. (68 kg).

⚠ WARNING

To avoid risk of personal injury or death:

- **Do not carry any flammable materials in the carrier.**
- **Do not allow the carrier and/or cargo to block the vehicle's exterior lighting or Back-up Camera.**

- **Ensure the carrier is properly secured to the vehicle.**
- **Load must be uniformly distributed to maintain a low center of gravity.**
- **Do not carry any loose cargo: firmly secure all cargo.**
- **Do not carry loads taller, wider, or deeper than the cargo carrier.**
- **Do not exceed max Load capacity of 150 lbs. (68 kg).**
- **Check and comply with local and state regulations regarding License plate visibility.**
- **Do not drive with carrier in vertical/ stowed condition. This position is for parking only.**
- **Drive slowly and carefully over speed bumps and on rough roads.**

POWER WINDOWS

Basic Information

⚠WARNING

- **Make sure that all passengers have their hands, etc., inside the vehicle while it is in motion and before closing the windows. Use the window lock switch to prevent unexpected use of the power windows.**
- **To help avoid risk of injury or death through unintended operation of the vehicle and/or its systems, including entrapment in windows or inadvertent door lock activation, do not leave children, people who require the assistance of others or pets unattended in your vehicle. Additionally, the temperature inside a closed vehicle on a warm day can quickly become high enough to cause a significant risk of injury or death to people and pets.**

The power windows operate when the ignition switch is placed in the ON position or for a period of time after the ignition switch is placed in the ACC or OFF position. If the driver's or passenger's door is opened during this period of time, the power to the windows is canceled.

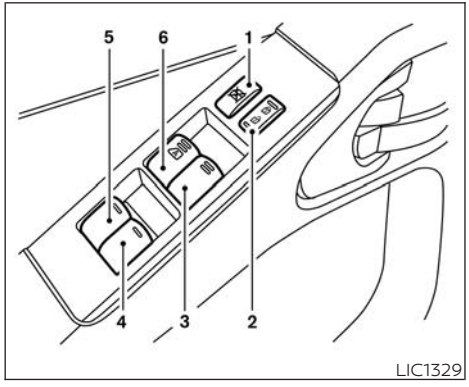

Driver's side power window switch

1. Window lock button
2. Power door lock switch
3. Front passenger side window switch
4. Right rear passenger window switch (Crew Cab models only)
5. Left rear passenger window switch (Crew Cab models only)
6. Driver's side automatic switch

The driver's side control panel is equipped with switches to open or close the front and rear passenger windows.

To open a window, push the switch and hold it down. To close a window, pull the switch and hold it up. To stop the opening or closing function at any time, simply release the switch.

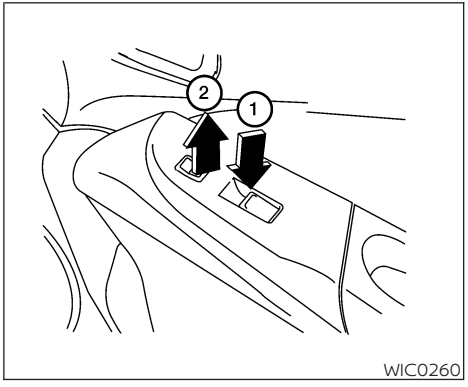

Front passenger's power window switch

The passenger's window switch operates only the corresponding passenger's window. To open the window, push the switch and hold it down ①. To close the window, pull the switch up ②.

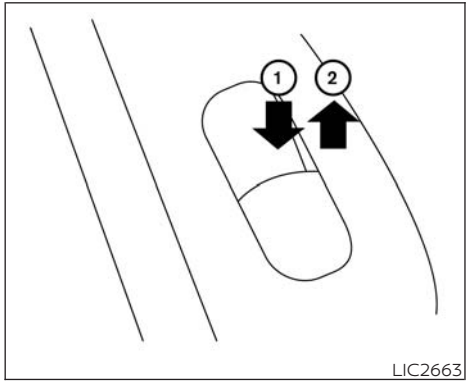

Rear power window switch (Crew Cab models only)

The rear power window switches open or close only the corresponding passenger window. To open the window, push the switch and hold it down ①. To close the window, push the switch up ②.

Locking passengers' windows

When the window lock switch is depressed, only the driver's side window can be opened or closed. Push it again to cancel the window lock function.

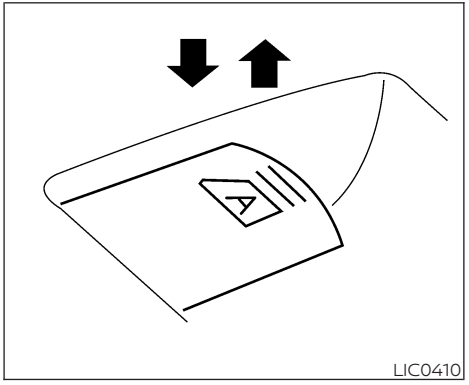

Automatic operation (if so equipped)

To fully open a window equipped with automatic operation, push the window switch down to the second detent and release it; it need not be held. The window automatically opens all the way. To stop the window, lift the switch up while the window is opening.

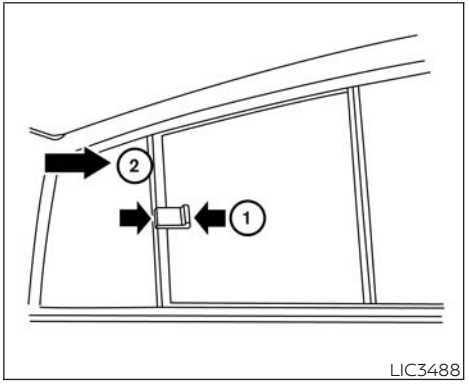

REAR SLIDING WINDOW (if so equipped)

⚠WARNING

- **You must ensure all occupants and objects are free of the rear window area prior to and during operation. Failure to do so may result in injury and/or damage to the rear window system.**
- **The rear window is not designed to carry long items through it.**

- **Do not place objects through the opened rear window. Do not use the rear window as a cargo area pass-through. This may result in damage to the rear window system or personal injury.**

Squeeze the handles of the lever ①, then slide the window open ②.

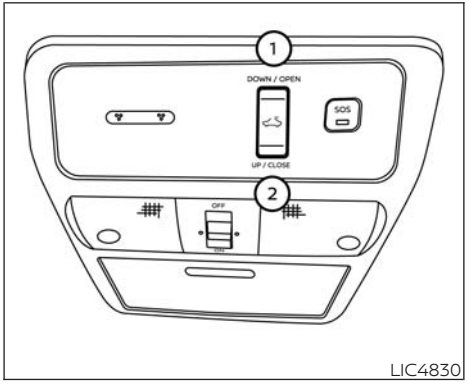

LIC4830

POWER MOONROOF

Basic Information

The moonroof will only operate when the ignition switch is in the ON position. The power moonroof is operational for about 45 seconds, even if the ignition switch is placed in the ACC or OFF position. If the driver's door or the front passenger's door is opened during this period of about 45 seconds, power to the moonroof is canceled.

Sliding the moonroof

To open the moonroof, push the switch toward DOWN/OPEN ① and release it. Push the switch again to fully open the moonroof.

To fully close the moonroof, push the switch toward UP/CLOSE ② and release it.

To open or close the moonroof part way, push the switch in any direction while the moonroof is sliding to stop it in the desired position.

Tilting the moonroof

Close the moonroof by pushing the switch toward UP/CLOSE ②. Release the switch, then push the UP/CLOSE switch again to tilt the moonroof up.

To tilt the moonroof down, push the switch toward DOWN/OPEN ①.

Auto-reverse function (when closing or tilting down the moonroof)

Basic Information

The auto-reverse function can be activated when the moonroof is closed or tilted down by automatic operation when the ignition switch is placed in the ON position or for a period of time after the ignition switch is placed in the OFF position.

Depending on the environment or driving conditions, the auto-reverse function may be activated if an impact or load similar to something being caught in the moonroof occurs.

⚠ WARNING

There are some small distances immediately before the closed position which cannot be detected. Make sure that all passengers have their hands, etc., inside the vehicle before closing the moonroof.

When closing

If the control unit detects something caught in the moonroof as it moves to the front, the moonroof will immediately open backward.

When tilting down

If the control unit detects something caught in the moonroof as it tilts down, the moonroof will immediately tilt up.

If the auto-reverse function malfunctions and repeats opening or tilting up the moonroof, keep pushing the tilt down switch within 5 seconds after it happens; the moonroof will fully close gradually. Make sure nothing is caught in the moonroof.

⚠ WARNING

- **In an accident you could be thrown from the vehicle through an open moonroof. Always use seat belts and child restraints.**
- **Do not allow anyone to stand up or extend any portion of their body out of the moonroof opening while the vehicle is in motion or while the moonroof is closing.**

⚠ CAUTION

- **Remove water drops, snow, ice or sand from the moonroof before opening.**
- **Do not place heavy objects on the moonroof or surrounding area.**

Sunshade

Open and close the sunshade by sliding it forward or backward.

If the moonroof does not close

Have your moonroof checked and repaired. It is recommended that you visit a NISSAN dealer for this service.

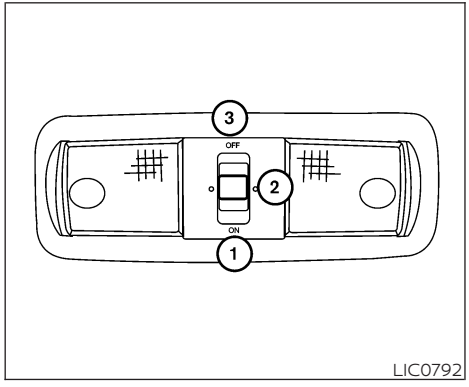

LIC0792

BASIC INFORMATION

The interior light has a three-position switch and operates regardless of ignition switch position.

When the switch is in the ON position ①, the interior lights illuminate, regardless of door position. The lights will go off after a period of time unless the ignition switch is placed in the ON position.

When the switch is in the DOOR or normal operation position ②, the interior lights will stay on for a period of time and the cargo light may illuminate when:

- The doors are unlocked by the key fob, a key or the power door lock switch while all doors are closed and the ignition switch is in the OFF position.
- The driver's door is opened and then closed while the ignition switch is placed in the OFF position.
- The ignition switch is placed in the OFF position while all doors are closed.

The lights will turn off while the timer is activated when:

- The driver's door is locked by the key fob, a key, or the power door lock switch.
- The ignition switch is placed in the ON position.

When the switch is in the OFF position ③, the interior lights do not illuminate, regardless of door position. The cargo light may illuminate when any front or rear passenger door is opened.

The lights will turn off automatically after a period of time while doors are open to prevent the battery from becoming discharged.

⚠ CAUTION

Do not use for extended periods of time with the engine stopped. This could result in a discharged battery.

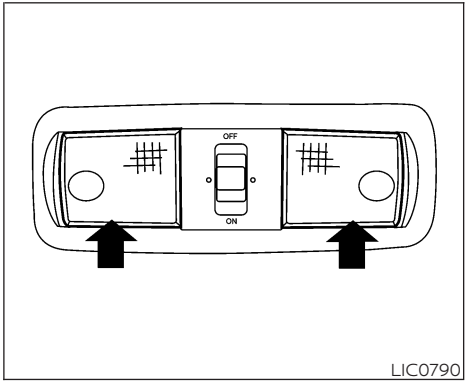

LIC0790

MAP LIGHTS

To turn the map lights on, press the lenses. To turn them off, press the lenses of the map lights again.

⚠ CAUTION

Do not use for extended periods of time with the engine stopped. This could result in a discharged battery.

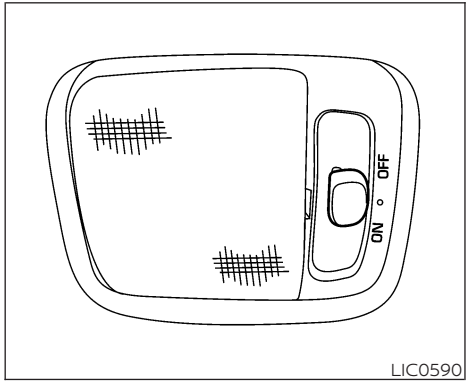

LIC0590

CARGO LIGHT

The cargo light on the overhead trim has a three-position switch. To operate, push the switch to the desired position.

ON: The light is illuminated.

DOOR: The light illuminates when the rear doors are opened. The light turns off when the rear doors are closed.

OFF: The light does not illuminate regardless of door position or lock status.

⚠ CAUTION

Do not use for extended periods of time with the engine stopped. This could result in a discharged battery.

HOMELINK® UNIVERSAL TRANSCEIVER (if so equipped)

BASIC INFORMATION

The HomeLink® Universal Transceiver provides a convenient way to consolidate the functions of up to three individual hand-held transmitters into one built-in device.

HomeLink® Universal Transceiver:

- Will operate most Radio Frequency (RF) devices such as garage doors, gates, home and office lighting, entry door locks and security systems.
- Is powered by your vehicle's battery. No separate batteries are required. If the vehicle's battery is discharged or is disconnected, HomeLink® will retain all programming.

When the HomeLink® Universal Transceiver is programmed, retain the original transmitter for future programming procedures (Example: new vehicle purchases). Upon sale of the vehicle, the programmed HomeLink® Universal Transceiver buttons should be erased for security purposes. For additional information, see "Programming HomeLink®" (P. 188).

⚠ WARNING

- **Do not use the HomeLink® Universal Transceiver with any garage door opener that lacks safety stop and reverse features as required by federal safety standards. (These standards became effective for opener models manufactured after April 1, 1982.) A garage door opener which cannot detect an object in the path of a closing garage door and then automatically stop and reverse does not meet current federal safety standards. Using a garage door opener without these features increases the risk of serious injury or death.**
- **During the programming procedure your garage door or security gate will open and close (if the transmitter is within range). Make sure that people or objects are clear of the garage door, gate, etc., that you are programming.**
- **Your vehicle's engine should be turned off while programming the HomeLink® Universal Transceiver. Do not breathe exhaust gases; they contain colorless and odorless carbon monoxide. Carbon monoxide is dangerous. It can cause unconsciousness or death.**

PROGRAMMING HOMELINK®

The following steps show generic instructions on how to program a HomeLink® button. If you have any questions or are having difficulty programming your HomeLink® buttons, refer to the HomeLink® web site at: www.homelink.com/nissan or call 1-800-355-3515.

NOTE:

It is also recommended that a new battery be placed in the hand-held transmitter of the device being programmed to HomeLink® for quicker programming and accurate transmission of the radio-frequency.

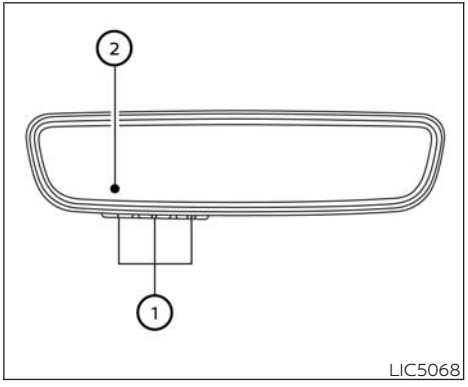

① HomeLink® buttons (1–3)

② Indicator light (appears above each HomeLink® button)

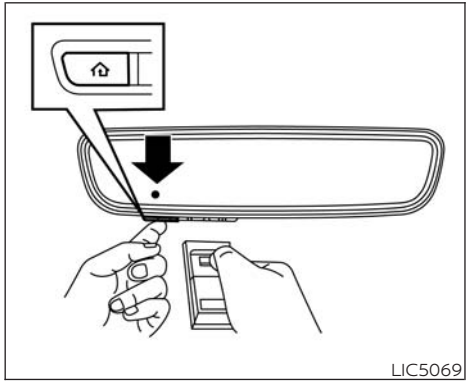

1. Position the end of your hand-held transmitter 1-3 inches (2-8 cm) away from the HomeLink® button that you would wish to program while keeping the indicator light in view.
2. Simultaneously press and hold both the chosen HomeLink® and hand-held transmitter buttons until the HomeLink® indicator light changes from a slow to a rapidly blinking light. Now you may release both the HomeLink® and hand-held transmitter buttons.

NOTE:
Some hand-held transmitters (garage door opener remote) may actually train better at a distance of 6–12 inches (15–20 cm). Keep this in mind if you have difficulty with the programming process.

3. Firmly **press, hold for five seconds and release** the programmed HomeLink® button up to two separate times to activate the door. If the door does not activate, press and hold the just trained HomeLink® button and observe the indicator light.
   - If the indicator light **stays on constantly, programming is complete** and your device should activate when the Homelink® button is pressed and released.
   - If the indicator light blinks **rapidly for two seconds and then turns to a constant light, continue with "Programming" steps 4–6** to complete the programming of a rolling code equipped device (most commonly a garage door opener).

NOTE:
Some devices may require you to replace this Programming Step 2 with procedures noted in the "Programming HomeLink® for Canadian customers and gate openers" (P. 190) section. If the HomeLink® indicator light does not change to a rapidly blinking light after performing these steps, contact HomeLink® at www.homelink.com.

4. At the garage door opener motor (security gate motor, etc.), locate the "Learn" or "Set" button. This can usually be found where the hanging antenna wire is attached to the motor-head unit (see the device's manual to identify this button.). The name and color of the button may vary by manufacturer.

NOTE:
A ladder and/or second person may simplify the garage door programming steps. Do not stand on your vehicle to perform the garage door programming steps.

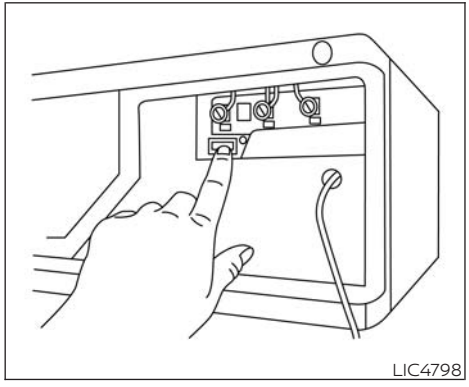

Example

5. Firmly press and release the "Learn" or "Set" button until the indicator illuminates. Once the button is pressed, you have approximately 30 seconds to initiate the next step.
6. Return to the vehicle and firmly press, hold for two seconds and release the HomeLink® button up to three times. **Do not press the HomeLink® button rapidly.** At this point programming is complete and your device should operate when the HomeLink® button is pressed and released.
7. If you have any questions or are having difficulty programming your HomeLink® buttons, refer to the HomeLink® web site at: www.homelink.com/nissan or call 1-800-355-3515.

PROGRAMMING HOMELINK® FOR CANADIAN CUSTOMERS AND GATE OPENERS

Canadian radio-frequency laws require transmitter signals to "time-out" (or quit) after several seconds of transmission – which may not be long enough for HomeLink® to pick up the signal during training. Similar to this Canadian law, some U.S. gate operators are designed to "time-out" in the same manner.

If you live in Canada or you are having difficulties training a gate operator **or** garage door opener by using the "Programming HomeLink®" procedures, **replace** "Programming HomeLink®" **step 2** with the following:

NOTE:

When programming a garage door opener, etc., unplug the device during the "cycling" process to prevent possible damage to the device components.

Step 2: Continue to press and hold the HomeLink® button while you press and release – every two seconds ("cycle") your hand-held transmitter until the HomeLink® indicator light changes from a slow to a rapidly blinking light. Now you may release both the Homelink® and hand-held transmitter buttons.

Proceed with "Programming HomeLink®" step 3 to complete.

Remember to plug the device back in when programming is completed.

OPERATING THE HOMELINK® UNIVERSAL TRANSCEIVER

The HomeLink® Universal Transceiver, after it is programmed, can be used to activate the programmed device. To operate, firmly press the appropriate programmed HomeLink® button. The indicator light will illuminate in green with three parenthesis ((( ))) on the mirror while the signal is being transmitted.

PROGRAMMING TROUBLE-SHOOTING

If the HomeLink® does not quickly learn the hand-held transmitter information:

- Replace the hand-held transmitter batteries with new batteries.
- Position the hand-held transmitter with its battery area facing away from the HomeLink® button.
- Press and hold both the HomeLink® button and hand-held transmitter button in each step without interruption.
- Position the hand-held transmitter 1 to 3 in (2 to 8 cm) away from the HomeLink® button. Hold the transmitter in that position for up to 15 seconds. If HomeLink® is not programmed within that time, try holding the transmitter in another position – for example, 6 to 12 in (15 to 20 cm) away, keeping the HomeLink® button in view at all times.

It is recommended not to place metal objects near the garage door opener antenna for optimal functionality.

If you have any questions or are having difficulty programming your HomeLink® buttons, refer to the HomeLink® web site at: www.homelink.com/nissan or call 1-800-355-3515.

CLEARING THE PROGRAMMED INFORMATION

Basic Information

The following procedure clears the programmed information from three buttons. Individual buttons cannot be cleared. However, individual buttons can be reprogrammed. For additional information, see "Reprogramming a single HomeLink® button" (P. 191).

To clear all programming

1. Press and hold the two outer HomeLink® buttons until the indicator light begins to flash in green in approximately 10 seconds. Do not hold for longer than 20 seconds.
2. Release both buttons.

HomeLink® is now in the programming mode and can be programmed at any time beginning with "Programming HomeLink®" - Step 1.

REPROGRAMMING A SINGLE HOMELINK® BUTTON

To reprogram a HomeLink® button, complete the following:

1. Press and hold the desired HomeLink® button. **DO NOT** release the button.
2. The indicator light will begin to flash after 20 seconds. Without releasing the HomeLink® button, proceed with "Programming HomeLink®" — step 1.

For questions or comments, contact HomeLink® at: www.homelink.com/nissan or 1–800–355–3515.

The HomeLink® button has now been reprogrammed. The new device can be activated by pressing the HomeLink® button that was just programmed. This procedure will not affect any other programmed HomeLink® buttons.

If a new device is not programmed to the HomeLink® button, it will revert to the previously stored programming.

IF YOUR VEHICLE IS STOLEN

If your vehicle is stolen, you should change the codes of any non-rolling code device that has been programmed into HomeLink®. Consult the Owner's Manual of each device or call the manufacturer or dealer of those devices for additional information.

When your vehicle is recovered, you will need to reprogram the HomeLink® Universal Transceiver with your new transmitter information.

FCC Notice:

For USA:

This device complies with Part 15 of the FCC Rules. Operation is subject to the following two conditions: (1) This device may not cause harmful interference, and (2) this device must accept any interference received, including interference that may cause undesired operation.

NOTE:

Changes or modifications not expressly approved by the party responsible for compliance could void the user's authority to operate the equipment.

For Canada:

This device contains licence-exempt transmitter(s)/receiver(s) that comply with Innovation, Science and Economic Development Canada's licence-exempt RSS(s). Operation is subject to the following two conditions: (1) This device may not cause interference. (2) This device must accept any interference, including interference that may cause undesired operation of the device.

3 Pre-driving checks and adjustments

Keys . . . 194
NISSAN Intelligent Key® . . . 194
NISSAN Vehicle Immobilizer System keys . . . 196
Doors . . . 196
Basic information . . . 196
Locking with key . . . 197
Locking with inside lock knob . . . 197
Locking with power door lock switch . . . 198
Rear doors (King Cab® models) . . . 198
Automatic door locks . . . 199
Child safety rear door lock (if so equipped) . . . 199
NISSAN Intelligent Key® system . . . 200
Basic information . . . 200
Operating range . . . 201
Door locks/unlocks precaution . . . 202
NISSAN Intelligent Key® Operation . . . 202
How to use the remote keyless entry function . . . 206
Warning signals . . . 209
Troubleshooting guide . . . 209
Remote Engine Start (if so equipped) . . . 211
Basic information . . . 211
Remote Engine Start operating range . . . 211
Remote starting the vehicle . . . 212
Extending engine run time . . . 212
Canceling a Remote Engine Start . . . 212
Conditions the Remote Engine Start will not work . . . 213
Hood . . . 213
Fuel-filler door . . . 214
Fuel-filler cap . . . 214
Steering wheel . . . 216
Basic information . . . 216
Tilt and telescopic operation . . . 216
Sun visors . . . 217
Basic information . . . 217
Vanity mirrors (if so equipped) . . . 217
Mirrors . . . 218
Manual anti-glare rearview mirror (if so equipped) . . . 218
Automatic anti-glare rearview mirror (if so equipped) . . . 218
Outside mirrors . . . 218
Truck box . . . 220
Tailgate . . . 220
Tie down hooks . . . 224

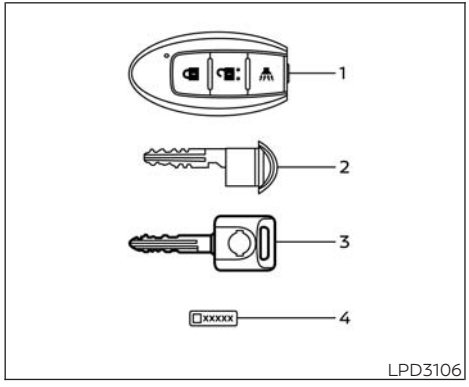

Type A (if so equipped)

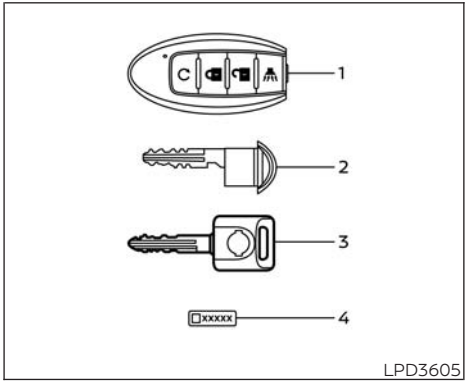

Type B (if so equipped)

1. Two Intelligent Keys
2. Mechanical key
3. Master key
4. Key number plate

NISSAN INTELLIGENT KEY®

Basic information

Your vehicle can only be driven with the Intelligent Keys which are registered to your vehicle's Intelligent Key system components and NISSAN Vehicle Immobilizer System components.

Never leave these keys in the vehicle.

As many as four Intelligent Keys can be registered and used with one vehicle. The new keys must be registered by a NISSAN dealer prior to use with the Intelligent Key system and NISSAN Vehicle Immobilizer System of your vehicle. Since the registration process requires erasing all memory in the Intelligent Key components when registering new keys, be sure to take all Intelligent Keys that you have to the NISSAN dealer.

A key number plate is supplied with your keys. Record the key number and keep it in a safe place (such as your wallet), not in the vehicle. If you lose your keys, it is recommended that you visit a NISSAN dealer for duplicates by using the key number. NISSAN does not record key numbers so it is very important to keep track of your key number plate.

A key number is only necessary when you have lost all keys and do not have one to duplicate from. If you still have a key, it can be duplicated without knowing the key number.

⚠ CAUTION

Listed below are conditions or occurrences which will damage the Intelligent Key:

- **Do not allow the Intelligent Key, which contains electrical components, to come into contact with water or salt water. This could affect the system function.**
- **Do not drop the Intelligent Key.**
- **Do not strike the Intelligent Key sharply against another object.**
- **Do not change or modify the Intelligent Key.**

- **Wetting may damage the Intelligent Key. If the Intelligent Key gets wet, immediately wipe until it is completely dry.**
- **Do not place the Intelligent Key for an extended period in an area where temperatures exceed 140˚F (60˚C).**
- **Do not attach the Intelligent Key with a key holder that contains a magnet.**
- **Do not place the Intelligent Key near equipment that produces a magnetic field, such as a TV, audio equipment and personal computers.**

If an Intelligent Key is lost or stolen, NISSAN recommends erasing the ID code of that Intelligent Key from the vehicle. This may prevent the unauthorized use of the Intelligent Key to operate the vehicle. For information regarding the erasing procedure, it is recommended that you visit a NISSAN dealer.

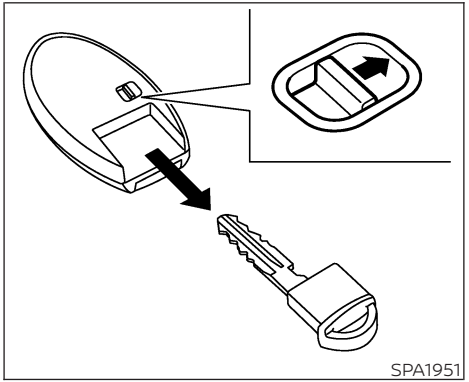

Mechanical key

The Intelligent Key contains the mechanical key.

To remove the mechanical key, release the lock knob on the back of the Intelligent Key.

To install the mechanical key, firmly insert it into the Intelligent Key until the lock knob returns to the lock position.

Use the mechanical key to lock or unlock the driver's door, tailgate and glove box (if so equipped).

⚠ CAUTION

Always carry the mechanical key installed in the Intelligent Key slot.

For additional information, see "Doors" (P. 196), "Tailgate" (P. 220) or "Glove box" (P. 177).

Valet hand-off (if so equipped)

When you have to leave a key with a valet, give them the Intelligent Key itself and keep the mechanical key and the master key with you to protect your belongings.

To prevent the glove box from being opened during valet hand-off, follow the procedure below.

1. Remove the mechanical key from the Intelligent Key.
2. Lock the glove box (if so equipped) with the mechanical key or master key.
3. Hand the Intelligent Key to the valet and keep the mechanical key and the master key with you.

For additional information, see "Glove box" (P. 177).

NISSAN VEHICLE IMMOBILIZER SYSTEM KEYS

Additional or replacement keys:

If you still have a key, the key number is not necessary when you need extra NISSAN Vehicle Immobilizer System keys. Your existing key can be duplicated without knowing the key number. As many as four NISSAN Vehicle Immobilizer System keys can be used with one vehicle. You should bring all NISSAN Vehicle Immobilizer System keys that you have to the NISSAN dealer for registration. This is because the registration process will erase the memory of all key codes previously registered into the NISSAN Vehicle Immobilizer System. After the registration process, these components will only recognize keys coded into the NISSAN Vehicle Immobilizer System during registration. Any virtual key accessories (if so equipped) will also have to be reregistered. Any key that is not given to the dealer at the time of registration will no longer be able to start your vehicle.

⚠ CAUTION

Do not allow the immobilizer system key, which contains an electrical transponder, to come into contact with water or salt water. This could affect system function.

BASIC INFORMATION

When the doors are locked using one of the following methods, the doors cannot be opened using the inside or outside door handles. The doors must be unlocked to open the doors.

⚠ WARNING

- **Always have the doors locked while driving. Along with the use of seat belts, this provides greater safety in the event of an accident by helping to prevent persons from being thrown from the vehicle. This also helps keep children and others from unintentionally opening the doors, and will help keep out intruders.**
- **Before opening any door, always look for and avoid oncoming traffic.**
- **To help avoid risk of injury or death through unintended operation of the vehicle and/or its systems, including entrapment in windows or inadvertent door lock activation, do not leave children, people who require the assistance of others or pets unattended in your vehicle. Additionally,**

the temperature inside a closed vehicle on a warm day can quickly become high enough to cause a significant risk of injury or death to people and pets.

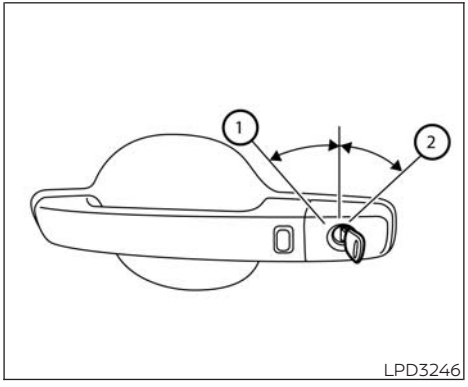

Driver's side

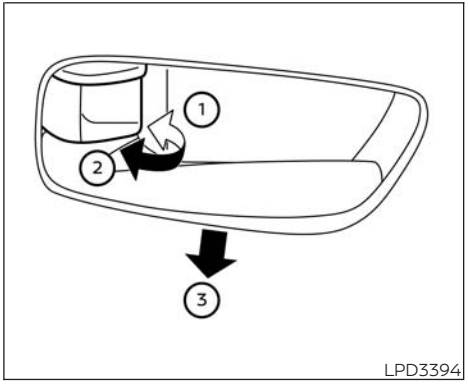

Inside lock

LOCKING WITH KEY

To lock the door using the mechanical key, turn the key toward the rear of the vehicle ②. This will only lock the door and will not activate the security system. To arm the security system, press the button on the Intelligent Key.

To unlock the door using the mechanical key, turn the key toward the front of the vehicle ①. This will only unlock the corresponding door and will not disarm the security system.

For additional information, see "Security systems" (P. 144).

LOCKING WITH INSIDE LOCK KNOB

To lock the door without the key, move the inside lock knob to the lock position ①, then close the door.

To unlock the door without the key, move the inside lock knob to the unlock position ②.

To unlock or open the front doors without using the lock knob, pull once on the door handle ③ to unlock it, and again to open it.

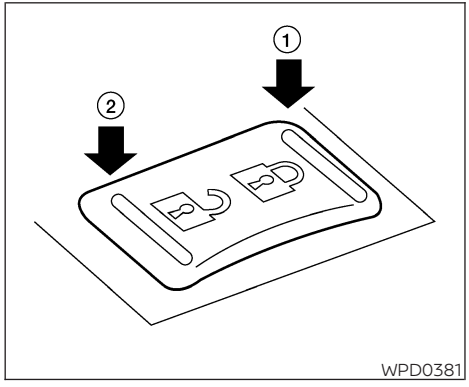

WPD0381

LOCKING WITH POWER DOOR LOCK SWITCH

To lock all the doors without a key, push the door lock switch (driver's or front passenger's side) to the lock position ①. When locking the door this way, be certain not to leave the key inside the vehicle.

To unlock all the doors without a key, push the door lock switch (driver's or front passenger's side) to the unlock position ②.

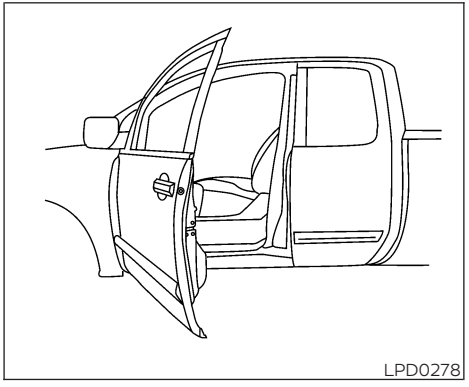
LPD0278

REAR DOORS (King Cab® models)

1. Open the driver's or passenger's door.

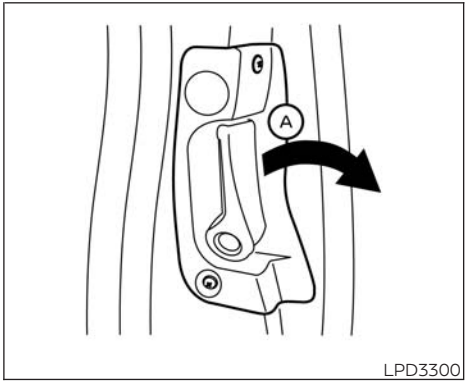

LPD3300

2. From the outside, pull the door handle Ⓐ toward you.

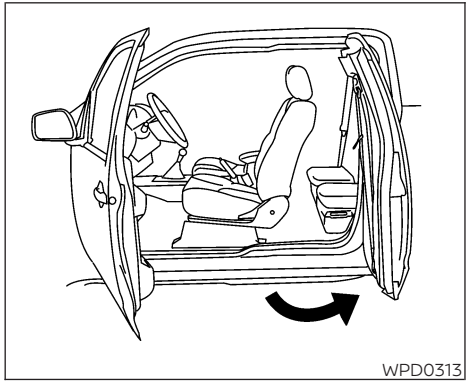

3. Open the door to the desired position.

AUTOMATIC DOOR LOCKS

- All doors lock automatically when the vehicle speed reaches 15 mph (24 km/h).
- All doors unlock automatically when the transmission is placed in the P (Park) position or when the ignition switch is placed in the OFF position depending on the option selected in the "Vehicle Settings" menu. For additional information, see "Vehicle settings"(P. 133).

NOTE:

The Auto Door Unlock function can be changed using "Vehicle Settings" of the vehicle information display.

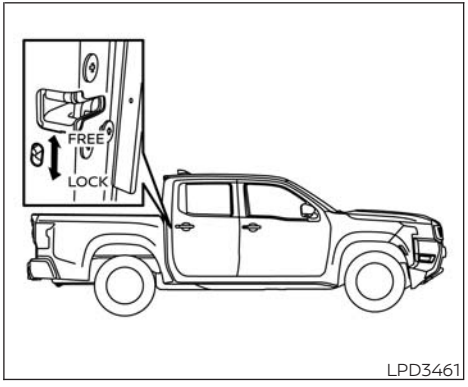

CHILD SAFETY REAR DOOR LOCK (if so equipped)

Child safety locks help prevent the rear doors from being opened accidentally, especially when small children are in the vehicle.

The child safety lock levers are located on the edge of the rear doors.

When the lever is in the LOCK position, the door can be opened only from the outside.

BASIC INFORMATION

⚠ WARNING

- **Radio waves could adversely affect electric medical equipment. Those who use a pacemaker should contact the electric medical equipment manufacturer for the possible influences before use.**
- **The Intelligent Key transmits radio waves when the buttons are pressed. The FAA advises the radio waves may affect aircraft navigation and communication systems. Do not operate the Intelligent Key while on an airplane. Make sure the buttons are not operated unintentionally when the unit is stored for a flight.**
- **Make sure to engage the P (Park) position and apply the parking brake when parking your vehicle, entering or exiting the vehicle or loading luggage. Failure to do so could cause the vehicle to move or roll away unexpectedly and result in serious personal injury or property damage.**

The Intelligent Key system can operate all the door locks using the remote control function or pushing the request switch (if so equipped) on the vehicle without taking the key out from a pocket or purse. The operating environment and/or conditions may affect the Intelligent Key system operation.

Be sure to read the following before using the Intelligent Key system.

⚠ CAUTION

- **Be sure to carry the Intelligent Key with you when operating the vehicle.**
- **Never leave the Intelligent Key in the vehicle when you leave the vehicle.**

The Intelligent Key is capable of receiving and transmitting radio waves. The Intelligent Key system transmits weak radio waves from various distances. Environmental conditions may interfere with the operation of the Intelligent Key system under the following operating conditions:

- When operating near a location where strong radio waves are transmitted, such as a TV tower, power station and broadcasting station.
- When in possession of wireless equipment, such as a cellular telephone, transceiver or a CB radio.
- When the Intelligent Key is in contact with or covered by metallic materials.
- When any type of radio wave remote control is used nearby.
- When the Intelligent Key is placed near an electric appliance such as a personal computer.
- When the vehicle is parked near a parking meter.

In such cases, correct the operating conditions before using the Intelligent Key function or use the mechanical key.

Although the life of the battery varies depending on the operating conditions, the battery's life is approximately two years. If the battery is discharged, replace it with a new one.

When the Intelligent Key battery is low, the "Key Battery Low" indicator illuminates in the vehicle information display. For additional information, see "Vehicle information display" (P. 124).

Since the Intelligent Key is capable of receiving radio waves, if the key is left near equipment which transmits strong radio waves, such as signals from a TV and personal computer, the battery life may become shorter.

For additional information, see "Intelligent Key battery replacement" (P. 454).

Pay special attention that the vehicle battery is not completely discharged.

As many as four Intelligent Keys can be registered and used with one vehicle. For information about the purchase and use of additional Intelligent Keys, it is recommended that you visit a NISSAN dealer.

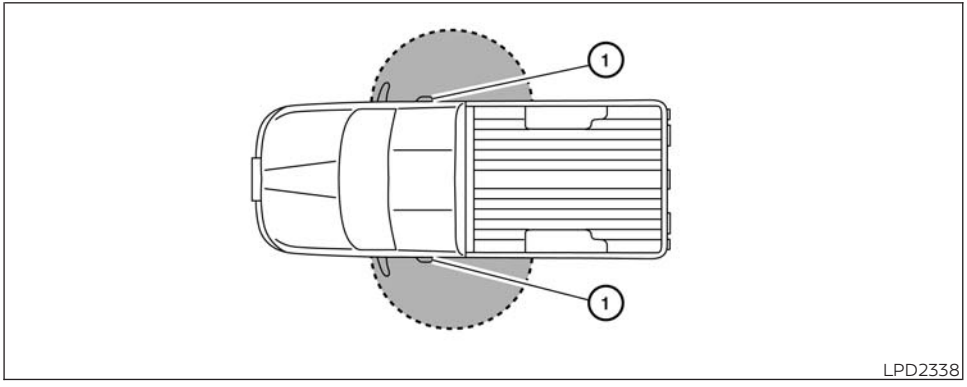

OPERATING RANGE

The Intelligent Key functions can only be used when the Intelligent Key is within the specified operating range from the request switch ① (if so equipped).

When the Intelligent Key battery is discharged or strong radio waves are present near the operating location, the Intelligent Key operating range becomes narrower, and the Intelligent Key may not function properly.

The operating range is within 31.5 in (80 cm) from each request switch ① (if so equipped).

If the Intelligent Key is too close to the door glass or handle, the request switches (if so equipped) may not function.

When the Intelligent Key is within the operating range, it is possible for anyone, even someone who does not carry the Intelligent Key, to push the request switch (if so equipped) to lock/unlock the doors.

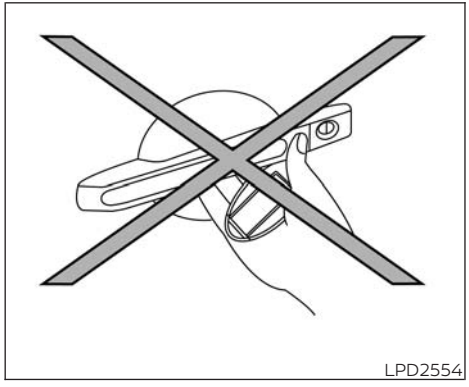
LPD2554

DOOR LOCKS/UNLOCKS PRECAUTION

- Do not push the door handle request switch (if so equipped) with the Intelligent Key held in your hand as illustrated. The close distance to the door handle will cause the Intelligent Key system to have difficulty recognizing that the Intelligent Key is outside the vehicle.
- After locking with the door handle request switch (if so equipped), verify the doors are securely locked by testing them.
- To prevent the Intelligent Key from being left inside the vehicle, make sure you carry the Intelligent Key with you and then lock the doors.
- Do not pull the door handle before pushing the door handle request switch (if so equipped). The door will be unlocked but will not open. Release the door handle once and pull it again to open the door.

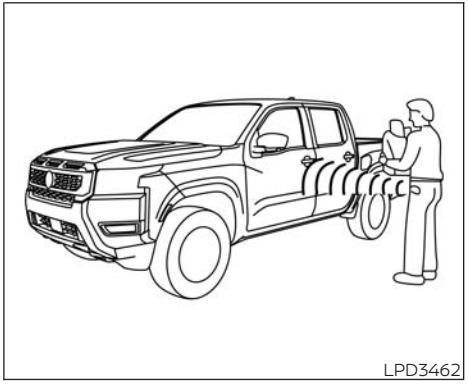
LPD3462

NISSAN INTELLIGENT KEY® OPERATION

Basic information

You can lock or unlock the doors without taking the Intelligent Key out of your pocket or bag.

When you carry the Intelligent Key with you, you can lock or unlock all doors by pushing the door handle request switch (if so equipped) within the range of operation.

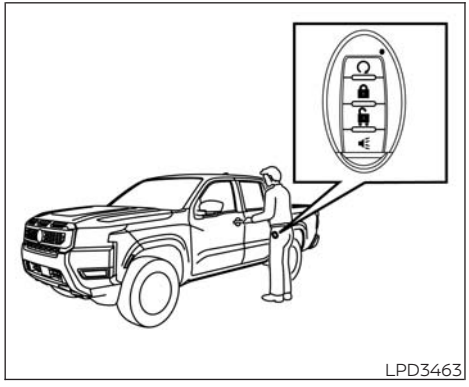
LPD3463

Locking doors

Basic information

1. Move the shift lever to the P (Park) position, place the ignition switch in the LOCK position and make sure you carry the Intelligent Key with you.
2. Close all doors.

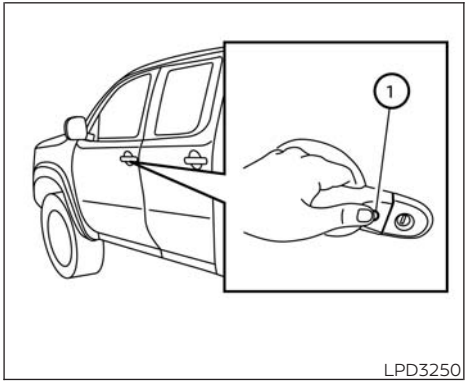

LPD3250

3. Push any door handle request switch ① (if so equipped) while carrying the Intelligent Key with you.
4. All doors will lock.
5. The hazard indicator lights flash twice and the buzzer beeps twice.

NOTE:

- **Request switches (if so equipped) for all doors can be deactivated when the "I-Key Door Lock (if so equipped)" setting is switched to OFF in the "Vehicle Settings" of the vehicle information display. For additional information, see "Vehicle information display" (P. 124).**
- **Doors do not lock by pushing the door handle request switch (if so equipped) while the door is open. If the door is closed all doors lock by pushing the door handle request switch (if so equipped) while other doors open.**
- **Doors do not lock with the door handle request switch (if so equipped) with the Intelligent Key inside the vehicle and a beep sounds to warn you. However, when an Intelligent Key is inside the vehicle, doors can be locked with another Intelligent Key.**

⚠ WARNING

After locking the doors using the request switch (if so equipped), make sure that the doors have been securely locked by operating the door handles. Failure to follow these instructions may result in inadvertently unlocking the doors, which may decrease the safety and security of your vehicle.

⚠ CAUTION

- **When locking the doors using the request switch (if so equipped), make sure to have the Intelligent Key in your possession before operating the request switch (if so equipped) to prevent the Intelligent Key from being left in the vehicle.**
- **The request switch (if so equipped) is operational only when the Intelligent Key has been detected by the Intelligent Key system.**

Lockout protection

To prevent the Intelligent Key from being accidentally locked in the vehicle, lockout protection is equipped with the Intelligent Key system.

When the driver's side door is open, the doors are locked, then the Intelligent Key is left inside the vehicle and the door is closed, all doors will unlock automatically.

NOTE:

The doors may not lock when the Intelligent Key is in the same hand that is operating the request switch (if so equipped) to lock the door. Put the Intelligent Key in a purse, pocket or your other hand.

⚠ CAUTION

The lockout protection may not function under the following conditions:

- **When the Intelligent Key is placed on top of the instrument panel.**
- **When the Intelligent Key is placed inside the glove box or a storage bin.**
- **When the Intelligent Key is placed inside the door pockets.**
- **When the Intelligent Key is placed inside or near metallic materials.**

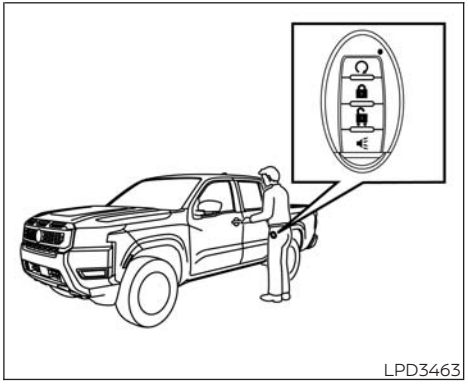

Unlocking doors

1. Carry the Intelligent Key.

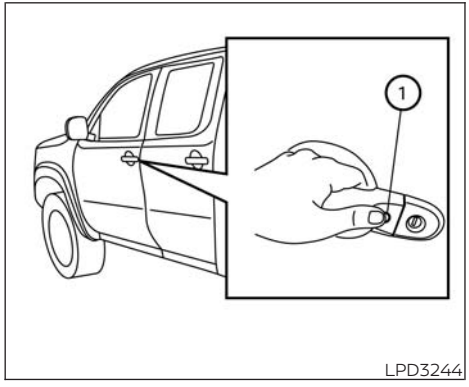

2. Push any door handle request switch ① (if so equipped).
3. The door on which the request switch (if so equipped) was pressed will unlock and the hazard indicator lights flash once and the outside buzzer sounds once.
4. Push the door handle request switch ① (if so equipped) again within 60 seconds to unlock all doors.

NOTE:

- **If the "Selective Unlock" feature is switched to OFF using the "Vehicle Settings" menu, all doors will unlock upon the first request switch ① (if so equipped) press.**
- **Request switches (if so equipped) for all doors can be deactivated when the "I-Key Door Lock (if so equipped)" setting is switched to OFF in the "Vehicle Settings" of the vehicle information display. For additional information, see "Vehicle information display" (P. 124).**

If a door handle is pulled while unlocking the doors, that door may not be unlocked. Returning the door handle to its original position will unlock the door. If the door does not unlock after returning the door handle, push the door handle request switch (if so equipped) to unlock the door.

All doors will be locked automatically unless one of the following operations is performed within one minute after pushing the request switch (if so equipped).

- Opening any door.
- Pushing the ignition switch.

Using the interior lights

The interior lights illuminate for a period of time when a door is unlocked and the interior light switch is in the DOOR position.

The lights can be turned off without waiting by performing one of the following operations:

- Placing the ignition switch in the ON position.
- Locking the doors with the Intelligent Key.
- Switching the interior lights switch to the OFF position.

For additional information, see "Interior lights" (P. 186).

HOW TO USE THE REMOTE KEYLESS ENTRY FUNCTION

Basic information

The remote keyless entry function can operate all door locks using the remote keyless function of the Intelligent Key. The remote keyless function can operate at a distance of 16 ft (5 m) away from the vehicle. The operating distance depends upon the conditions around the vehicle.

The remote keyless entry function will not function under the following conditions:

- When the Intelligent Key is not within the operational range.
- When the doors are open or not closed securely.
- When the Intelligent Key battery is discharged.

⚠ CAUTION

When locking the doors using the Intelligent Key, be sure not to leave the key in the vehicle.

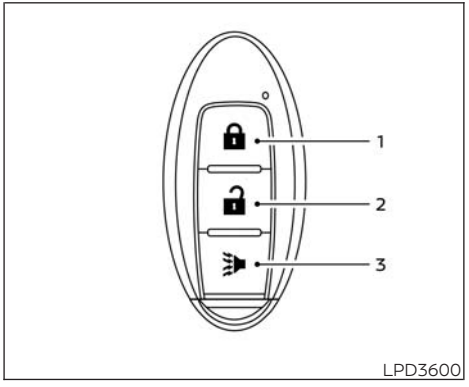

Type A (if so equipped)

1. (lock) button
2. (unlock) button
3. (panic) button

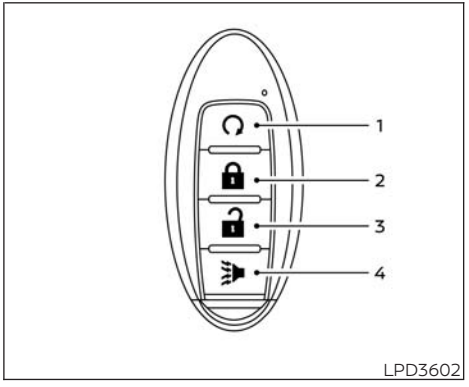

Type B (if so equipped)

1. (remote engine start) button
2. (lock) button
3. (unlock) button
4. (panic) button

Locking doors

1. Place the ignition switch in the LOCK position.
2. Close all doors.
3. Press the button on the Intelligent Key.
4. The hazard indicator lights flash twice and the horn beeps once.
5. All doors will be locked.

WARNING

After locking the doors using the Intelligent Key, be sure that the doors have been securely locked by operating the door handles. Failure to follow these instructions may result in inadvertently unlocking the doors, which may decrease the safety and security of your vehicle.

Unlocking doors

1. Press the button on the Intelligent Key.
2. The hazard indicator lights flash once and the driver's door will unlock.
3. Press the button again within 60 seconds to unlock all doors

NOTE:

The Selective Unlock feature can be changed using the "Vehicle Settings" menu on the vehicle information display. For additional information, see "Vehicle information display" (P. 124).

All doors will be locked automatically unless one of the following operations is performed within 60 seconds after pressing the button:

- Opening any doors.
- Pushing the ignition switch.

Using the interior lights

The interior lights illuminate for a period of time when a door is unlocked and the interior light switch is in the DOOR position.

The lights can be turned off without waiting by performing one of the following operations:

- Placing the ignition switch in the ON position.
- Locking the doors with the Intelligent Key.
- Switching the interior lights switch to the OFF position.

For additional information, see "Interior lights" (P. 186).

Opening window(s) (if so equipped)

The Intelligent Key allows you to simultaneously open the window(s) equipped with automatic operation.

All doors must be closed and the key must be outside the vehicle.

To open the window(s) equipped with automatic operation, press and hold the button on the Intelligent Key for **longer than 3 seconds** after all doors are unlocked.

The door window(s) equipped with automatic operation will open while pressing the button on the Intelligent Key.

To interrupt opening of the window(s), release the button.

- The Intelligent Key cannot close any window.
- All doors will be unlocked by the operation.

Using the panic alarm

If you are near your vehicle and feel threatened, you may activate the panic alarm to call attention by pressing and holding the button on the Intelligent Key for **longer than 0.5 seconds.**

The panic alarm and headlights will stay on for a period of time.

The panic alarm stops when:

- It has run for a period of time.
- Any button is pressed on the Intelligent Key.

Answer back horn feature

If desired, the answer back horn feature can be deactivated using the Intelligent Key. When it is deactivated and the button is pressed, the hazard indicator lights flash twice. When the button is pressed, neither the hazard indicator lights nor the horn operates.

NOTE:

If you change the Answer Back Horn and light flash feature with the Intelligent Key, the vehicle information display screen will show the current mode after the ignition switch has been cycled from the OFF to the ON position. The vehicle information display screen can also be used to change the answer back horn mode.
For additional information, see "Vehicle Settings" (P. 133).

To deactivate:
Press and hold the and buttons **for at least 4 seconds.** The hazard indicator lights will flash three times to confirm that the answer back horn feature has been deactivated.

To activate:
Press and hold the and buttons **for at least 4 seconds once more.** The hazard indicator lights will flash once and the horn will sound once to confirm that the horn beep feature has been reactivated.

Deactivating the horn beep feature does not silence the horn if the alarm is triggered.

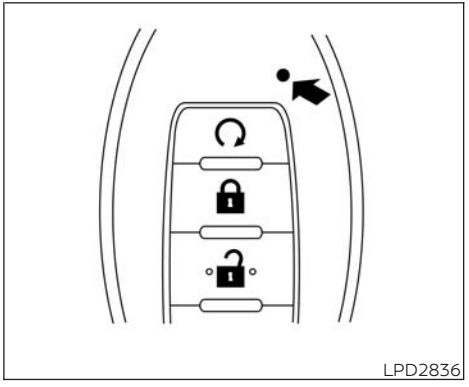

Intelligent Key button operation light

The light blinks only when you press any button on the Intelligent Key. The light illumination only signifies that the key fob has transmitted a signal. You may look and/or listen to verify that the vehicle has performed the intended operation.

If the light does not blink, your battery may be too weak to communicate to the vehicle. If this occurs, the battery may need to be replaced. For additional information regarding the replacement of a battery, see "Intelligent Key battery replacement" (P. 454).

WARNING SIGNALS

To help prevent the vehicle from moving unexpectedly by erroneous operation of the Intelligent Key or to help prevent the vehicle from being stolen, a chime or chirp sounds from inside and outside the vehicle and a warning is displayed in the instrument panel.

When a chime or beep sounds or a warning is displayed, be sure to check the vehicle and the Intelligent Key.

For additional information, see "Troubleshooting guide" (P. 209) and "Vehicle information display" (P. 124).

TROUBLESHOOTING GUIDE

Verify the location of all Intelligent Keys that are programmed for the vehicle. If another Intelligent Key is in range or inside the vehicle, the vehicle system may respond differently than expected.

Symptom: When stopping the engine> The Shift to Park warning appears on the display and the inside warning chime sounds continuously.
• Possible Cause: The shift lever is not in the P (Park) position.
• Remedy: Move the shift lever to the P (Park) position.
Symptom: When opening the driver's door to get out of the vehicle> The Door Open warning appears on the display and the inside warning chime sounds continuously.
• Possible Cause: The ignition switch is in the ACC position.
• Remedy: Place the ignition switch in the ON position or close the driver's door.
Symptom: When closing the door after getting out of the vehicle> The No Key Detected warning appears on the display, the outside chime sounds three times and the inside warning chime sounds for approximately 3 seconds.
• Possible Cause: The ignition switch is in the ACC or ON position.
• Remedy: Place the ignition switch in the OFF position.
Symptom: When closing the door after getting out of the vehicle> The Rear Door Alert warning message appears on the display, the horn sounds three times twice, or a "Check Rear Seat for All Articles" warning appears on the display.
• Possible Cause: The Rear Door Alert is activated.
• Remedy: Check the back seat for all articles, press the OK button to clear the Rear Door Alert warning message or open the rear door.

Symptom: When closing the door after getting out of the vehicle> The Shift to Park warning appears on the display and the inside and outside chimes sound continuously.
• Possible Cause: The ignition switch is in the ACC or OFF position and the shift lever is not in the P (Park) position.
• Remedy: Move the shift lever to the P (Park) position and place the ignition switch in the OFF position.
Symptom: When closing the door with the inside lock knob turned to LOCK> The outside chime sounds for approximately 3 seconds and all the doors unlock.
• Possible Cause: The Intelligent Key is inside the vehicle.
• Remedy: Carry the Intelligent Key with you.
Symptom: When pushing the door handle request switch (if so equipped) or pressing the button on the Intelligent Key to lock the door> The outside chime sounds for approximately 2 seconds.
• Possible Cause: The Intelligent Key is inside the vehicle.
• Remedy: Carry the Intelligent Key with you.
Symptom: When pushing the ignition switch to start the engine> The Key Battery Low appears on the display.
• Possible Cause: The battery charge is low.
• Remedy: Replace the battery with a new one. For additional information, see "Intelligent Key battery replacement" (P. 454).
Symptom: When pushing the ignition switch to start the engine> The No Key Detected warning appears on the display, the inside chime sounds 3 times.
• Possible Cause: The Intelligent Key is not in the vehicle.
• Remedy: Carry the Intelligent Key with you.
Symptom: When pushing the ignition switch> The Key System Error warning message appears on the display.
• Possible Cause: It warns of a malfunction with the Intelligent Key system.
• Remedy: It is recommended that you visit a NISSAN dealer.

REMOTE ENGINE START (if so equipped)

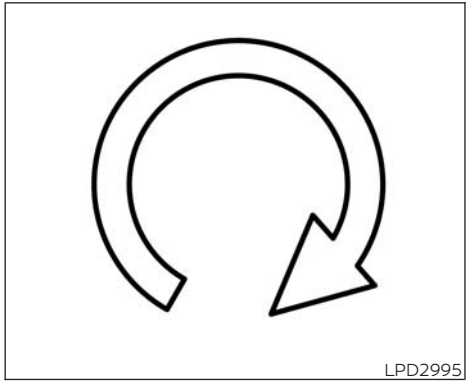

BASIC INFORMATION

The button will be on the NISSAN Intelligent Key® if the vehicle has Remote Engine Start. This feature allows the engine to start from outside the vehicle.

The following features may be affected when the Remote Engine Start feature is used:

- Vehicles with a manual climate control system will default to the last used heating or cooling mode.
- Vehicles with an automatic climate control system may default to either a heating or cooling mode depending on outside and cabin temperatures. For additional information, see "Remote Engine Start with Intelligent Climate Control" (P. 263).

Laws in some local communities may restrict or prohibit the use of Remote Engine Start, or the amount of time a parked vehicle engine may idle. For example, some laws require a person using Remote Engine Start to have the vehicle in view or may restrict idling time except in freezing temperatures. Check local regulations for any requirements.

Other conditions may affect the function of the Remote Engine Start feature. For additional information, see "Conditions the Remote Engine Start will not work" (P. 213).

Other conditions can affect the performance of the Intelligent Key transmitter. For additional information, see "NISSAN Intelligent Key® system" (P. 200).

REMOTE ENGINE START OPERATING RANGE

⚠WARNING

- **To help avoid risk of injury or death through unintended operation of the vehicle and/or its systems, including entrapment in windows or inadvertent door lock activation, do not leave children, people who require the assistance of others or pets unattended in your vehicle. Additionally, the temperature inside a closed vehicle on a warm day can quickly become high enough to cause a significant risk of injury or death to people and pets.**
- **Do not use Remote Engine Start in closed spaces such as a garage. Do not breathe exhaust gases; they contain colorless and odorless carbon monoxide. Carbon monoxide is dangerous. It can cause unconsciousness or death.**

CAUTION

When the Intelligent Key battery is discharged or other strong radio wave sources are present near the operating location, the Intelligent Key operating range becomes narrower, and the Intelligent Key may not function properly.

The Remote Engine Start function can only be used when the Intelligent Key is within the specified operating range from the vehicle.

The Remote Engine Start operating range is approximately 16 ft (5 m) from the vehicle.

REMOTE STARTING THE VEHICLE

To use the Remote Engine Start feature perform the following:

1. Aim the Intelligent Key at the vehicle.
2. Press the button to lock all doors.
3. Within 5 seconds press and hold the button until the turn signal lights flash and the tail lamps turn on. If the vehicle is not within view press and hold the button for at least 2 seconds.

The following events will occur when the engine starts:

- The parking lights will turn on and remain on as long as the engine is running.
- The doors will be locked and the climate control system may come on.
- The engine will continue to run for 10 minutes. Repeat the steps to extend the time for an additional 10 minutes. For additional information, see "Extending engine run time" (P. 212).

Press and hold the brake pedal while switching the ignition to the ON position before driving. For additional information, see "Driving the vehicle" (P. 287).

EXTENDING ENGINE RUN TIME

The Remote Engine Start feature can be extended one time by performing the steps listed in "Remote starting the vehicle" (P. 212). Run time will be calculated as follows:

- The first 10-minute run time will start when the Remote Engine Start function is performed.
- The second 10 minutes will start immediately when the Remote Engine Start function is performed again. For example, if the engine has been running for 5 minutes, and 10 minutes are added, the engine will run for a total of 15 minutes.
- Extending engine run time will bring you to the two Remote Engine Start limit.

A maximum of two Remote Engine Starts, or a single start with an extension, are allowed between ignition cycles.

The ignition switch must be cycled to the ON position and then back to the OFF position before the Remote Engine Start procedure can be used again.

CANCELING A REMOTE ENGINE START

To cancel a Remote Engine Start, perform one of the following:

- Aim the Intelligent Key at the vehicle and press until the parking lights turn off.
- Turn on the hazard indicator flashers.
- Cycle the ignition switch on and then off.
- The extended engine run time has expired.
- The first 10-minute timer has expired.
- The engine hood has been opened.

- The vehicle is shifted out of P (Park) position.
- The alarm sounds due to illegal entry into the vehicle.
- The ignition switch is pushed without an Intelligent Key in the vehicle.
- The ignition switch is pushed with an Intelligent Key in the vehicle but the brake pedal is not depressed.

CONDITIONS THE REMOTE ENGINE START WILL NOT WORK

The Remote Engine Start will not operate if any of the following conditions are present:

- The ignition switch is placed in the ON position.
- The hood is not securely closed.
- The hazard warning lights are on.
- The engine is still running. The engine must be completely stopped. Wait at least 6 seconds if the engine goes from running to off. This is not applicable when extending engine run time.
- The button is not pressed and held for at least 2 seconds.
- The button is not pressed and held within 5 seconds of pressing the lock button.
- The brake is pressed.
- The doors are not closed and locked.
- The Key System Error Light remains solid in the vehicle information display.
- The alarm sounds due to illegal entry into the vehicle.
- Two Remote Engine Starts, or a single Remote Engine Start with an extension, have already been used.
- The vehicle is not in P (Park) position.
- There is a detected registered key already inside of the vehicle.

The Remote Engine Start Mode (if so equipped) may display a warning or indicator in the vehicle information display. For additional information, see "Vehicle information display" (P. 124).

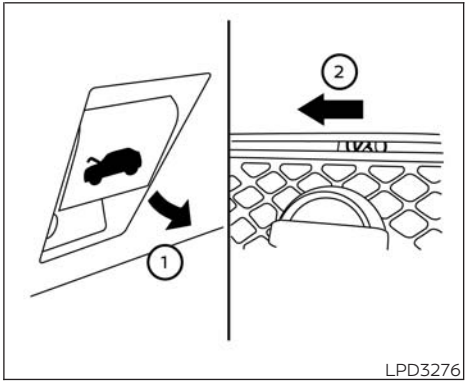

1. Pull the hood lock release handle ① located below the driver's side instrument panel. The hood will spring up slightly.
2. Push the lever ② at the front of the hood to the side as illustrated with your fingertips and raise the hood.

When closing the hood, lower it slowly and make sure it locks into place.

⚠ WARNING

- **Make sure the hood is completely closed and latched before driving. Failure to do so could cause the hood to fly open and result in an accident.**
- **If you see steam or smoke coming from the engine compartment, to avoid injury do not open the hood.**

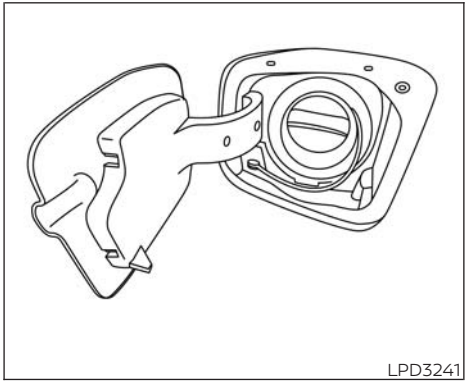

FUEL-FILLER CAP

Basic information

⚠ WARNING

- **Gasoline is extremely flammable and highly explosive under certain conditions. You could be burned or seriously injured if it is misused or mishandled. Always stop the engine and do not smoke or allow open flames or sparks near the vehicle when refueling.**
- **Do not attempt to top off the fuel tank after the fuel pump nozzle shuts off automatically. Continued refueling may cause fuel overflow, resulting in fuel spray and possibly a fire.**
- **Use only an original equipment type fuel-filler cap as a replacement. It has a built-in safety valve needed for proper operation of the fuel system and emission control system. An incorrect cap can result in a serious malfunction and possible injury. It could also cause the Malfunction Indicator Light (MIL) to come on.**
- **Never pour fuel into the throttle body to attempt to start your vehicle.**
- **Do not fill a portable fuel container in the vehicle or trailer. Static electricity can cause an explosion of flammable liquid, vapor or gas in any vehicle or trailer. To reduce the risk of serious injury or death when filling portable fuel containers:**
  - **Always place the container on the ground when filling.**
  - **Do not use electronic devices when filling.**

- **Keep the pump nozzle in contact with the container while you are filling it.**
- **Use only approved portable fuel containers for flammable liquid.**

⚠ CAUTION

- **Do not use a fuel containing more than 15% ethanol in your vehicle. For additional information, see "Fuel recommendation" (P. 503).**
- **The LOOSE FUEL CAP warning message will be displayed if the fuel-filler cap is not properly tightened. It may take a few driving trips for the message to be displayed. Failure to tighten the fuel-filler cap properly after the LOOSE FUEL CAP warning message is displayed may cause the Malfunction Indicator Light (MIL) to illuminate.**
- **Failure to tighten the fuel-filler cap properly may cause the Malfunction Indicator Light (MIL) to illuminate. If the light illuminates because the fuel-filler cap is loose or missing, tighten or install the cap and continue to drive the vehicle. The light should turn off after a few driving trips. If the light does not turn off after a few driving trips, have the vehicle inspected. It is recommended that you visit a NISSAN dealer for this service.**
- **For additional information, see "Malfunction Indicator Light (MIL)" (P. 121).**
- **If fuel is spilled on the vehicle body, flush it away with water to avoid paint damage.**

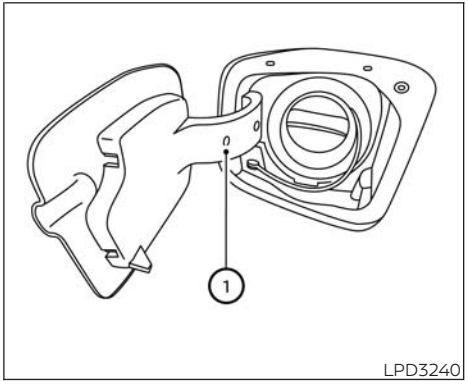

LPD3240

To remove the fuel-filler cap:

1. Turn the fuel-filler cap counterclockwise to remove.
2. Loop the tether strap around the hook ① while refueling.

To install the fuel-filler cap:

1. Insert the fuel-filler cap straight into the fuel-filler tube.
2. Turn the fuel-filler cap clockwise until a single click is heard .

LPD3029

Loose Fuel Cap warning

The Loose Fuel Cap warning appears in the vehicle information display when the fuel-filler cap is not tightened correctly after the vehicle has been refueled. It may take a few driving trips for the message to be displayed. To turn off the warning, perform the following:

1. Remove and install the fuel-filler cap as described above as soon as possible.
2. Tighten the fuel-filler cap until a single click is heard.

BASIC INFORMATION

⚠WARNING

- **Do not adjust the steering wheel while driving. You could lose control of your vehicle and cause an accident.**
- **Do not adjust the steering wheel any closer to you than is necessary for proper steering operation and comfort. The driver's air bag inflates with great force. If you are unrestrained, leaning forward, sitting sideways or out of position in any way, you are at greater risk of injury or death in a crash. You may also receive serious or fatal injuries from the air bag if you are up against it when it inflates. Always sit back against the seatback and as far away as practical from the steering wheel. Always use the seat belts.**

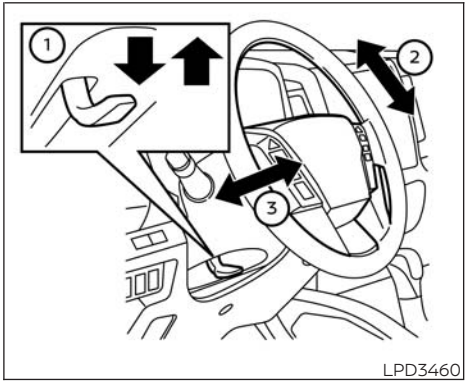

LPD3460

TILT AND TELESCOPIC OPERATION

Push the lock lever ① down:

- Adjust the steering wheel up or down in direction ② to the desired position.
- Adjust the steering wheel forward or backward in direction ③ to the desired position.

Pull the lock lever ① up firmly to lock the steering wheel in place.

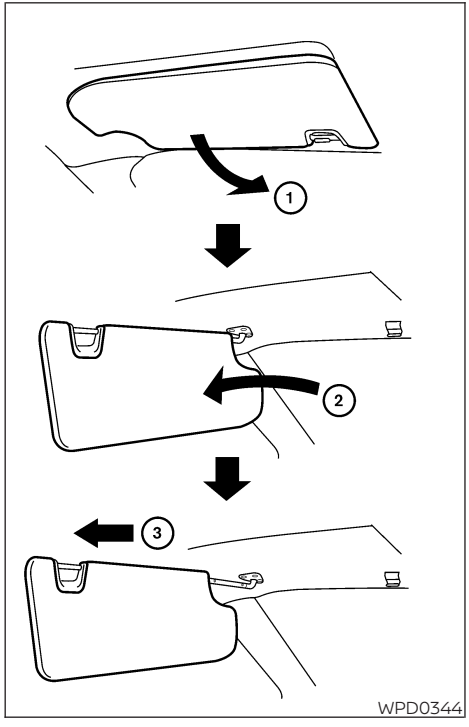

BASIC INFORMATION

1. To block glare from the front, swing down the sun visor ①.
2. To block glare from the side, remove the sun visor from the center mount and swing the visor to the side ②.
3. Slide the sun visor extension ③ in or out as needed.

⚠ CAUTION

- **Do not store the sun visor before returning the extension to its original position.**
- **Do not pull the extension sun visor forcedly downward.**

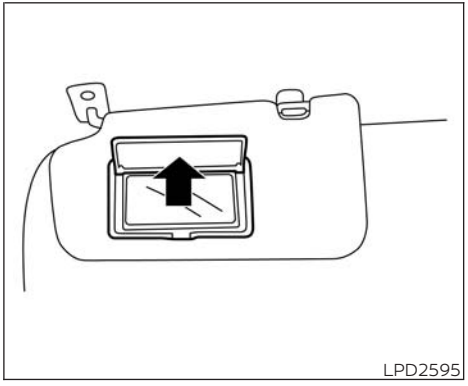

VANITY MIRRORS (if so equipped)

To access the vanity mirror (if so equipped), pull the sun visor down and flip open the mirror cover. Some vanity mirrors are illuminated and turn on when the mirror cover is open.

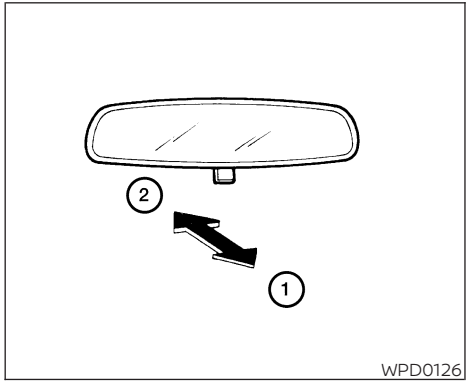

MANUAL ANTI-GLARE REARVIEW MIRROR (if so equipped)

Use the night position ① to reduce glare from the headlights of vehicles behind you at night.

Use the day position ② when driving in daylight hours.

⚠WARNING

Use the night position only when necessary, because it reduces rear view clarity.

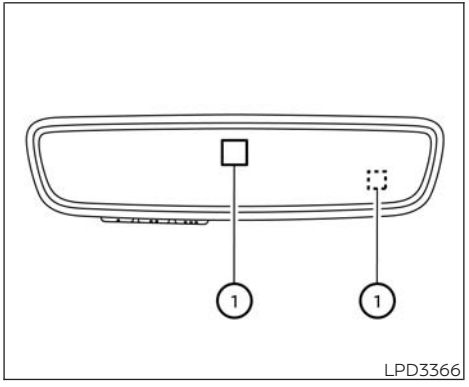

AUTOMATIC ANTI-GLARE REARVIEW MIRROR (if so equipped)

The inside mirror is designed so that it automatically dims during nighttime conditions and according to the intensity of the headlights of the vehicle following you. The automatic anti-glare feature is activated when the ignition switch is in the ON position.

NOTE:

Do not hang any objects over the sensors ① or apply glass cleaner to the sensors. Doing so will reduce the sensitivity of the sensors, resulting in improper operation.

For additional information, see "HomeLink® Universal Transceiver" (P. 187).

OUTSIDE MIRRORS

Basic information

⚠WARNING

- **Do not adjust the mirrors while driving. You could lose control of your vehicle and cause an accident.**
- **Objects viewed in the outside mirror on the passenger side are closer than they appear. Be careful when moving to the right. Using only this mirror could cause an accident. Use the inside mirror or glance over your shoulder to properly judge distances to other objects.**

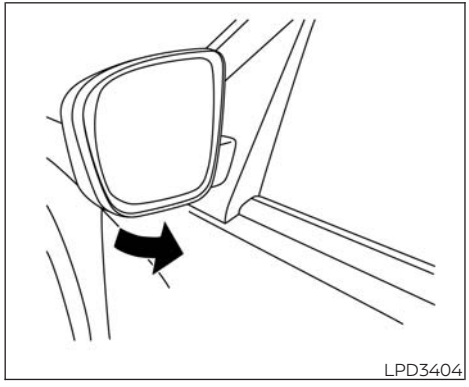

Manual folding outside mirrors

Pull the outside mirror toward the door to fold it.

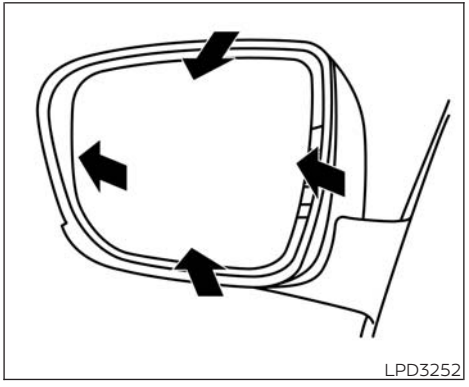

Manual control type (if so equipped)

The outside mirrors can be moved in any direction for a better rear view.

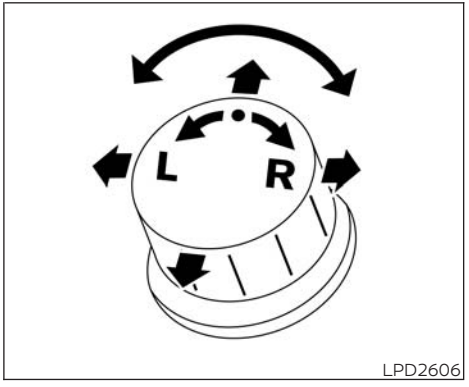

Electric control type (if so equipped)

The outside mirror remote control will operate only when the ignition switch is placed in the ACC or ON position.

Rotate the control dial to select the right or left mirror. Adjust the mirror to the desired position by moving the control dial.

Return the control dial to the center (neutral) position to prevent accidentally moving the mirror.

Heated mirrors (if so equipped)

Some outside mirrors can be heated to defog or de-ice for improved visibility. For additional information, see "Outside mirror defroster switch" (P. 148).

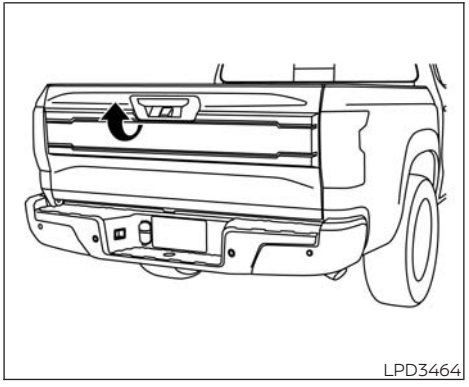

TAILGATE

Opening the tailgate

Pull the tailgate handle upward and lower the tailgate. The support cables hold the tailgate open.

When closing the tailgate, make sure the latches are securely locked.

Do not drive the vehicle with the tailgate down, unless equipped with NISSAN's Bed Extender (accessory) or equivalent in the extended position.

For additional information on proper truck box loading, see "Vehicle loading information" (P. 516).

⚠ WARNING

- **Never allow anyone to ride in the cargo area or on the rear seat when it is in the folded position. Use of these areas by passengers without proper restraints could result in serious injury or death in an accident or sudden stop.**
- **It is extremely dangerous to ride in a cargo area inside a vehicle. In a collision, people riding in these areas are more likely to be seriously injured or killed.**
- **Do not allow people to ride in any area of your vehicle that is not equipped with seats and seat belts.**
- **Be sure everyone in your vehicle is in a seat and using a seat belt properly.**

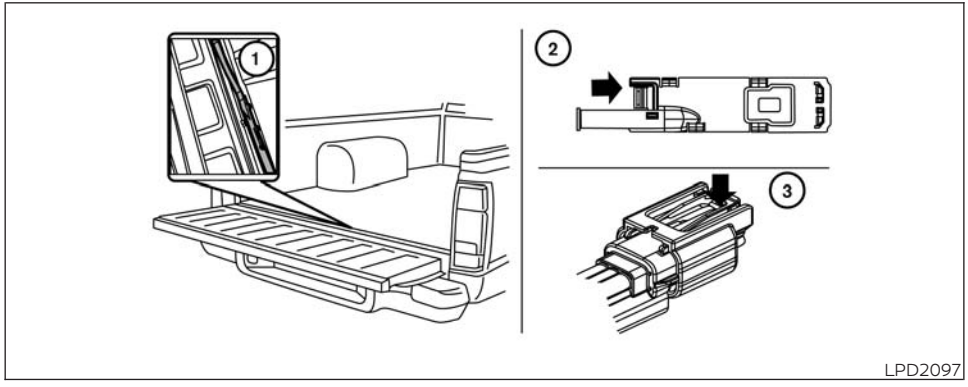

Disconnecting the rear camera

Before removing the tailgate disconnect the rear camera by performing the following:

1. Open the tailgate to access the rear camera connector bracket ① located on the rear sill.
2. Remove the connector bracket ② from the sill by pressing the locking tab inward, in the direction shown, while pulling the bracket apart.
3. Disconnect the chassis wiring harness ③ by pressing inward on the locking tab, in the direction shown, while pulling the connectors apart. Hold the connector firmly to prevent the connector in the chassis harness from falling into the sill.
4. Take the chassis plug and bracket from the glove box and connect them to the chassis wiring harness to avoid contamination to the terminals which will lead to malfunction of the rear camera.
5. Insert the bracket back into the sill.
6. Take the tailgate plug from the glove box and connect it to the tailgate wiring harness to avoid contamination which will lead to malfunction of the rear camera.
7. Remove the tailgate. For additional information, see "Removing the tailgate" (P. 222).

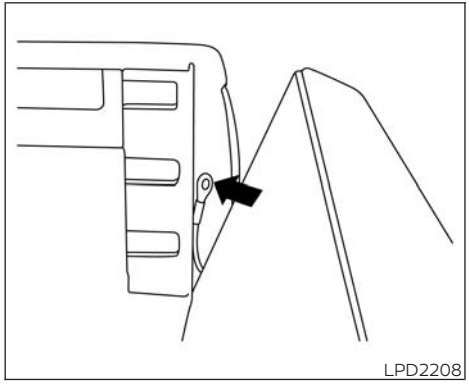

Removing the tailgate

1. Release the tailgate support cables.

⚠ CAUTION

- **The tailgate is heavy. Two people should remove or install it. Be careful not to drop it during removal.**
- **After releasing the support cables, do not let the tailgate rest on the bumper.**

2. Hold the tailgate at a 15 degree angle.
3. Pull the tailgate out from the left side hinge at an angle.
4. The tailgate slides out of the right side hinge.

Installing the tailgate

1. Insert the tailgate into the right side hinge.
2. Insert the tailgate into the left side hinge.
3. Continue to hold the tailgate at a 15 degree angle and attach the tailgate support cables.
4. Close the tailgate securely.

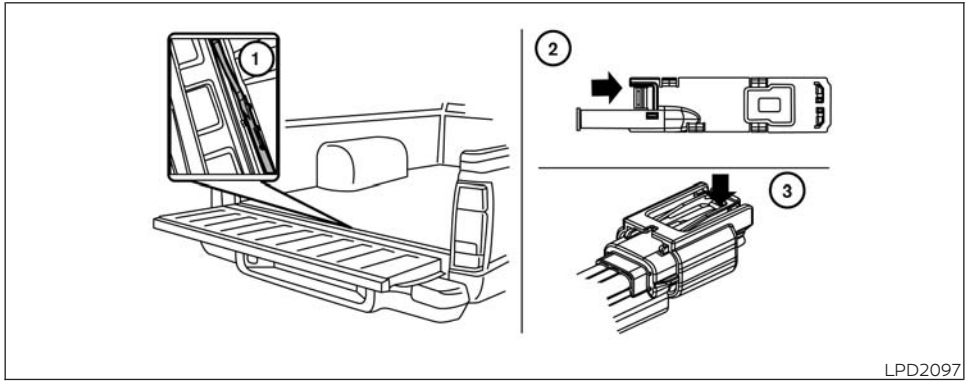

LPD2097

Connecting the rear camera

Before closing the tailgate reconnect the rear camera by performing the following:

1. After attaching the rear tailgate to the truck, keep the tailgate open and check that the tailgate harness is not hanging below the tailgate.
2. Remove the connector bracket ② from the sill by pressing the locking tab inward, in the direction shown, while pulling the bracket apart.
3. Disconnect the chassis plug and bracket from the chassis wiring harness ③. Keep the connector and bracket in a safe place such as the glove box.
4. Disconnect the tailgate plug from the tailgate wiring harness. Keep the tailgate plug in a safe place such as the glove box.
5. Connect the tailgate wiring harness to the chassis wiring harness.
6. Securely fix the rear camera connector bracket ① to the rear sill.
7. Close the tailgate securely.

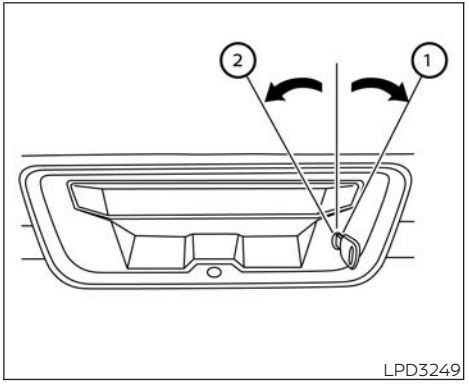

LPD3249

Locking the tailgate

To lock the tailgate, turn the key toward the passenger side of the vehicle ①. To unlock, turn the key toward the driver side ②.

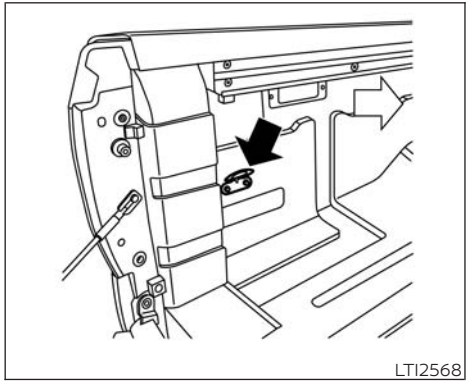

TIE DOWN HOOKS

For your convenience, tie down hooks are placed at each corner of the truck box. These may be used to help secure cargo loaded into the truck box.

- The weight of the cargo load must be evenly distributed over both the front and the rear axles.
- All cargo should be securely fastened with ropes or straps to prevent it from shifting or sliding within the vehicle.

⚠WARNING

Properly secure all cargo with ropes or straps to help prevent it from sliding or shifting. In a sudden stop or collision, unsecured cargo could cause personal injury.

4 Monitor, climate, audio, phone and voice recognition systems

NissanConnect® Owner's Manual 227
RearView Monitor (if so equipped) 228
Basic Information 228
RearView Monitor system operation 229
How to read the displayed lines 229
Difference between predicted and actual distances 230
How to park with predicted course lines 232
Adjusting the screen 233
How to turn on and off predicted course lines 233
RearView Monitor system limitations 233
System maintenance 235
Intelligent Around View® Monitor (if so equipped) 236
Basic Information 236
Intelligent Around View® Monitor system operation 237
Difference between predicted and actual distances 241
How to park with predicted course lines 243
How to switch the display 244
Off-road mode (if so equipped) 244
Adjusting the screen 245
Intelligent Around View® Monitor system limitations 245
System maintenance 247
Moving Object Detection (MOD) (if so equipped) 248
Basic Information 248
MOD system operation 249
Turning MOD on and off (if so equipped) 250
MOD system limitations 251
System maintenance 252
Vents 252
Heater and air conditioner (manual) (if so equipped) 252
Basic Information 252
Controls 253
Heater operation 254
Air conditioner operation 256
Air flow charts 257
Heater and air conditioner (automatic) (if so equipped) 261
Basic Information 261
Automatic operation 262
Manual operation 263
Operating tips 265
Servicing air conditioner 266

Antenna 266
Roof Mounted Antenna 266
Car phone or CB radio 266
iPod®/iPhone® 267

NISSANCONNECT® OWNER'S MANUAL

QR code (U.S. only)

Refer to the digital NissanConnect® Owner's manual using the QR code on this page (U.S. only), or your printed NissanConnect® Owner's manual (if so equipped). This manual includes the following information:

- NissanConnect® Services Powered By SiriusXM® (if so equipped)
- Navigation system (if so equipped)
- Audio system
- Apple CarPlay®
- Android Auto™
- Bluetooth® Hands-Free Phone system
- Viewing information
- Other settings
- Voice recognition
- General system information

REARVIEW MONITOR (if so equipped)

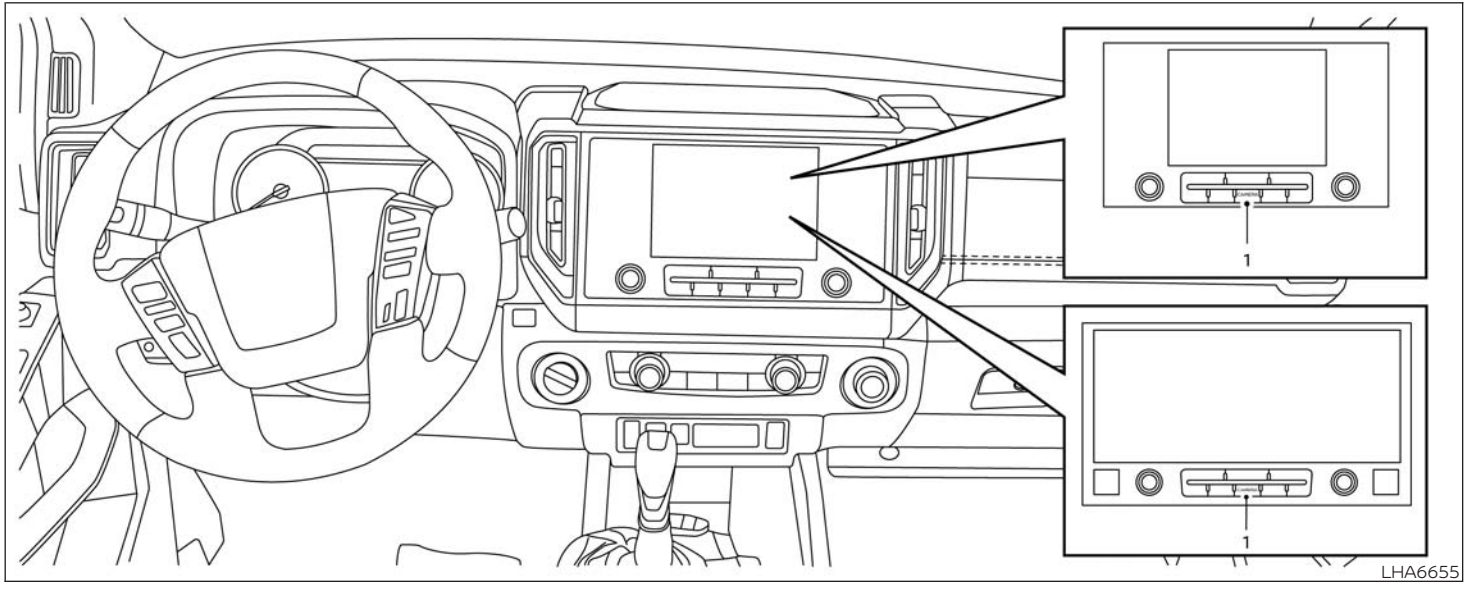

BASIC INFORMATION

1. CAMERA button

⚠ WARNING

- **Failure to follow the warnings and instructions for proper use of the RearView Monitor system could result in serious injury or death.**

- **RearView Monitor is a convenience feature and is not a substitute for proper backing. Always turn and look out the windows and check mirrors to be sure that it is safe to move before operating the vehicle. Always back up slowly.**

- **The system is designed as an aid to the driver in showing large stationary objects directly behind the vehicle, to help avoid damaging the vehicle.**
- **The distance guide line and the vehicle width line should be used as a reference only when the vehicle is on a level paved surface. The distance viewed on the monitor is for reference only and may be different than the actual distance between the vehicle and displayed objects.**

⚠ CAUTION

Do not scratch the camera lens when cleaning dirt or snow from the front of the camera.

The RearView Monitor system automatically shows a rear view of the vehicle when the shift lever is shifted into the R (Reverse) position. While in R (Reverse), pressing the CAMERA will cycle through guideline options. The radio can still be heard while the RearView Monitor is active.

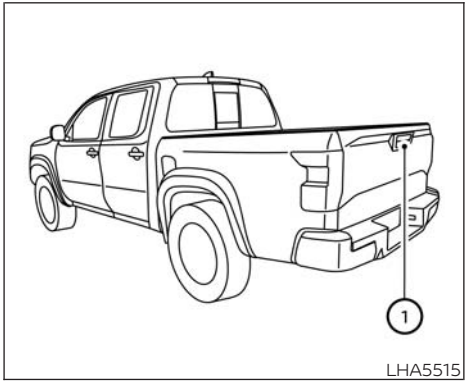

LHA5515

To display the rear view, the RearView Monitor system uses a camera located just above the vehicle's license plate ① on the tailgate.

REARVIEW MONITOR SYSTEM OPERATION

With the ignition switch in the ON position, move the shift lever to the R (Reverse) position to operate the RearView Monitor.

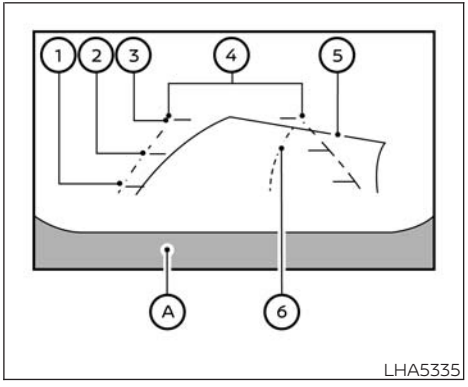

LHA5335

HOW TO READ THE DISPLAYED LINES

Guiding lines which indicate the vehicle width and distances to objects with reference to the vehicle body line Ⓐ are displayed on the monitor.

Distance guide lines

Indicate distances from the vehicle body.

- Red line ①: approximately 1.5 ft (0.5 m)
- Yellow line ②: approximately 3 ft (1 m)
- Green line ③: approximately 7 ft (2 m)

Vehicle width guide lines ④

Indicate the vehicle width when backing up.

Predicted course lines ⑤

Indicate the predicted course when backing up. The predicted course lines will be displayed on the monitor when the shift lever is in the R (Reverse) position and the steering wheel is turned. The predicted course lines will move depending on how much the steering wheel is turned and will not be displayed while the steering wheel is in the straight-ahead position.

The vehicle width guide lines and the width of the predicted course lines are wider than the actual width and course.

Center guide lines ⑥ (if so equipped)

Indicates the vehicle's center.

DIFFERENCE BETWEEN PREDICTED AND ACTUAL DISTANCES

Basic Information

The displayed guidelines and their locations on the ground are for approximate reference only. Objects on uphill or downhill surfaces or projecting objects will be actually located at distances different from those displayed in the monitor relative to the guidelines (refer to illustrations). When in doubt, turn around and view the objects as you are backing up, or park and exit the vehicle to view the positioning of objects behind the vehicle.

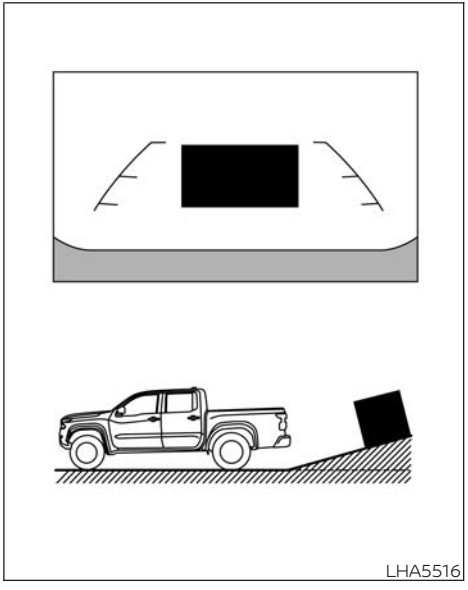

Backing up on a steep uphill

When backing up the vehicle up a hill, the distance guide lines and the vehicle width guide lines are shown closer than the actual distance. Note that any object on the hill is further than it appears on the monitor.

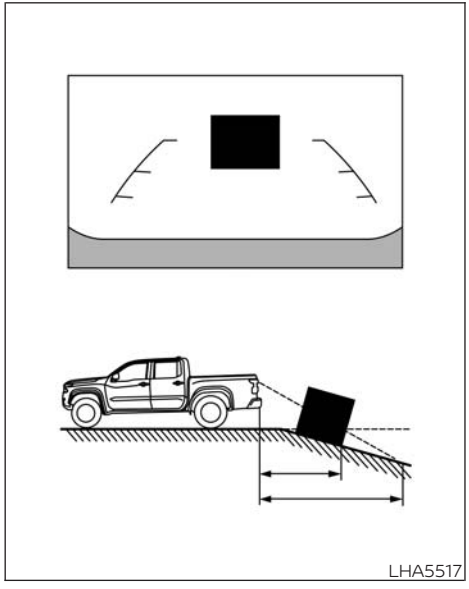

Backing up on a steep downhill

When backing up the vehicle down a hill, the distance guide lines and the vehicle width guide lines are shown farther than the actual distance. Note that any object on the hill is closer than it appears on the monitor.

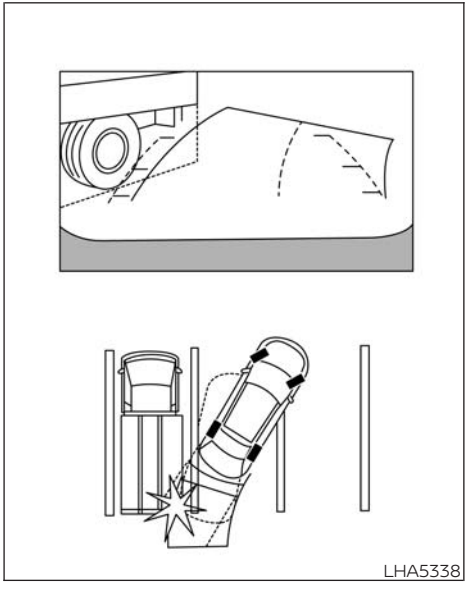

Backing up near a projecting object

The vehicle may seem to nearly clear the object in the display. However, the vehicle may hit the object if it projects over the actual backing up course.

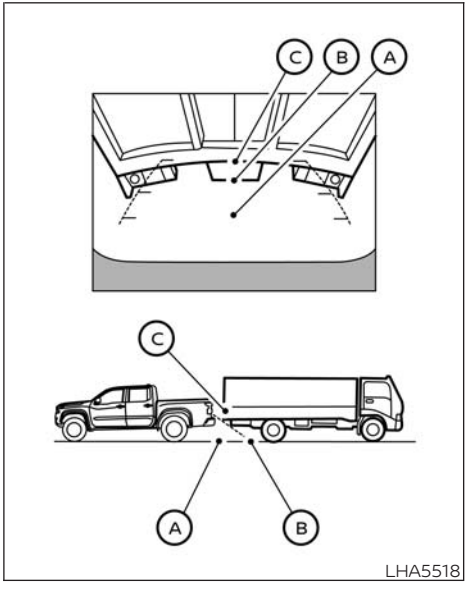

Backing up behind a projecting object

The position Ⓒ is shown farther than the position Ⓑ in the display. However, the position Ⓒ is actually at the same distance as the position Ⓐ. The vehicle may hit the

object when backing up to the position Ⓐ if the object projects over the actual backing up course.

HOW TO PARK WITH PREDICTED COURSE LINES

⚠ WARNING

- **If the tires are replaced with different sized tires, the predicted course lines may be displayed incorrectly.**
- **On a snow-covered or slippery road, there may be a difference between the predicted course line and the actual course line.**
- **If the battery is disconnected or becomes discharged, the predicted course lines may be displayed incorrectly. If this occurs, please perform the following procedures:**
  - **Turn the steering wheel from lock to lock while the engine is running.**
  - **Drive the vehicle on a straight road for more than 5 minutes.**
- **When the steering wheel is turned with the ignition switch in the ACC position, the predicted course lines may be displayed incorrectly.**

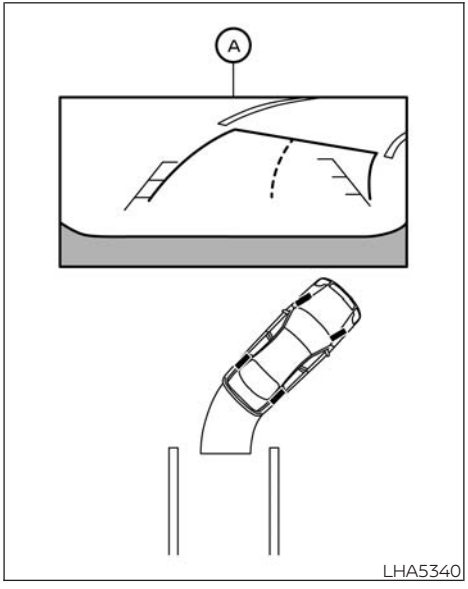

1. Visually check that the parking space is safe before parking your vehicle.
2. The rear view of the vehicle is displayed on the screen Ⓐ when the shift lever is moved to the R (Reverse) position.

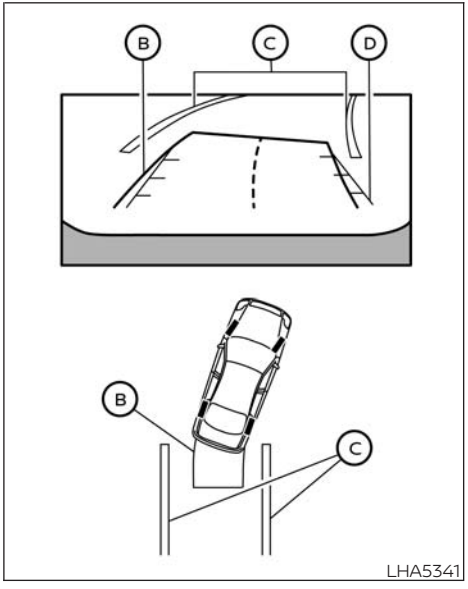

3. Slowly back up the vehicle adjusting the steering wheel so that the predicted course lines Ⓑ enter the parking space Ⓒ.

4. Maneuver the steering wheel to make the vehicle width guide lines Ⓓ parallel to the parking space Ⓒ while referring to the predicted course lines.
5. When the vehicle is parked in the space completely, move the shift lever to the P (Park) position and apply the parking brake.

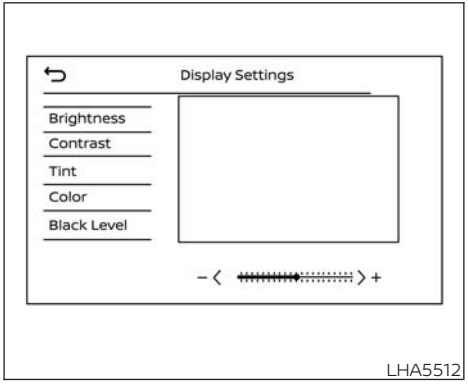

ADJUSTING THE SCREEN

1. Press the CAMERA button.
2. Touch the "Display Settings" key.
3. Touch the "Brightness", "Contrast", Tint", "Color", or "Black Level" key.
4. Adjust the item by touching the "+" or "–" key on the touch-screen display.

NOTE:

Do not adjust any of the display settings of the RearView Monitor while the vehicle is moving.

HOW TO TURN ON AND OFF PREDICTED COURSE LINES

To toggle ON and OFF the predicted course lines while in the P (Park) position:

1. Press the CAMERA button.
2. Touch the "Predicted Course Lines" key to turn the feature ON or OFF.

To toggle ON and OFF the predicted course lines or center guide line (if so equipped) while in the R (Reverse) position, press the CAMERA button.

REARVIEW MONITOR SYSTEM LIMITATIONS

⚠ WARNING

Listed below are the system limitations for RearView Monitor. Failure to operate the vehicle in accordance with these system limitations could result in serious injury or death.

- **The system cannot completely eliminate blind spots and may not show every object.**

- **Underneath the bumper and the corner areas of the bumper cannot be viewed on the RearView Monitor because of its monitoring range limitation. The system will not show small objects below the bumper, and may not show objects close to the bumper or on the ground.**
- **Objects viewed in the RearView Monitor differ from actual distance because a wide-angle lens is used.**
- **Objects in the RearView Monitor will appear visually opposite compared to when viewed in the rearview and outside mirrors.**
- **Use the displayed lines as a reference. The lines are highly affected by the number of occupants, fuel level, vehicle position, road conditions and road grade.**
- **Make sure that the tailgate is securely closed when backing up.**
- **Do not put anything on the rearview camera. The rearview camera is installed on the tailgate.**

- **When washing the vehicle with high pressure water, be sure not to spray it around the camera. Otherwise, water may enter the camera unit causing water condensation on the lens, a malfunction, fire or an electric shock.**
- **Do not strike the camera. It is a precision instrument. Otherwise, it may malfunction or cause damage resulting in a fire or an electric shock.**

The following are operating limitations and do not represent a system malfunction:

- When the temperature is extremely high or low, the screen may not clearly display objects.
- When strong light directly shines on the camera, objects may not be displayed clearly.
- Vertical lines may be seen in objects on the screen. This is due to strong reflected light from the bumper.
- The screen may flicker under fluorescent light.
- The colors of objects on the RearView Monitor may differ somewhat from the actual color of objects.
- Objects on the monitor may not be clear in a dark environment.
- There may be a delay when switching between views.
- If dirt, rain or snow accumulate on the camera, RearView Monitor may not display objects clearly. Clean the camera.
- Do not use wax on the camera lens. Wipe off any wax with a clean cloth dampened with a diluted mild cleaning agent, then wipe with a dry cloth.

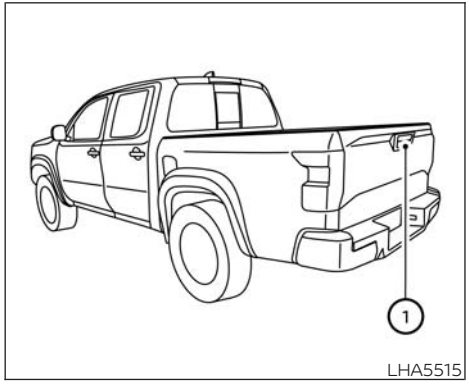

If dirt, rain or snow accumulates on the camera ①, the RearView Monitor may not display objects clearly. Clean the camera by wiping it with a cloth dampened with a diluted mild cleaning agent and then wiping it with a dry cloth.

SYSTEM MAINTENANCE

⚠ CAUTION

- **Do not use alcohol, benzine or thinner to clean the camera. This will cause discoloration.**
- **Do not damage the camera as the monitor screen may be adversely affected.**

INTELLIGENT AROUND VIEW® MONITOR (if so equipped)

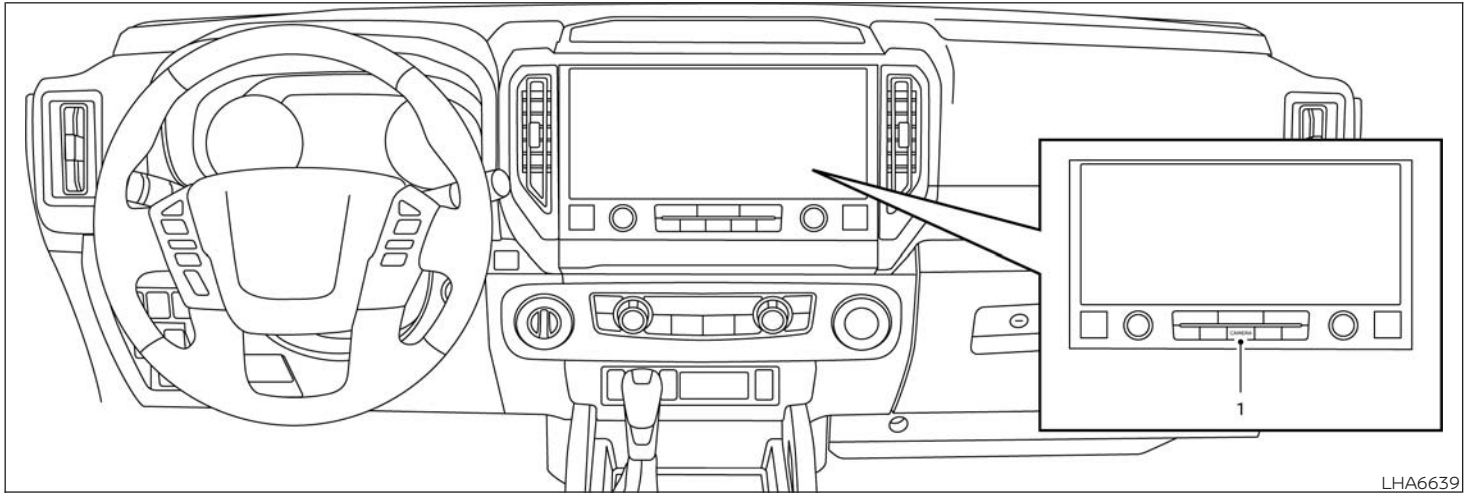

BASIC INFORMATION

1. CAMERA button

⚠ WARNING

- **Failure to follow the warnings and instructions for the proper use of the Intelligent Around View® Monitor system could result in serious injury or death.**
- **The Intelligent Around View® Monitor is a convenience feature and is not a substitute for proper vehicle operation because it has areas where objects cannot be viewed. The four corners of the vehicle in particular, are areas where objects do not always appear in the bird's-eye, front, or rear views. Always check your surroundings to be sure that it is safe to move before operating the vehicle. Always operate the vehicle slowly.**
- **The driver is always responsible for safety during parking and other maneuvers.**

⚠CAUTION

Do not scratch the camera lens when cleaning dirt or snow from the front of the camera.

The Intelligent Around View® Monitor system is designed as an aid to the driver in situations such as slot parking or parallel parking.

The monitor displays various views of the position of the vehicle in a split screen format. Not all views are available at all times.

Available views:

- Front View
  An approximately 150–degree view of the front of the vehicle.
- Rear View
  An approximately 150–degree view of the rear of the vehicle.
- Bird's-Eye View
  The surrounding views of the vehicle from above.
- Front-Side View
  The view around and ahead of the front passenger's side wheel.
- Rear-Wide View
  An approximately 180–degree view of the rear of the vehicle.

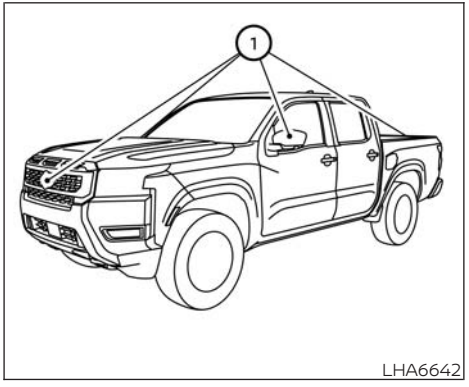

LHA6642

To display the multiple views, the Intelligent Around View® Monitor system uses cameras located in the front grille, on the vehicle's outside mirrors and one on the tailgate ①.

INTELLIGENT AROUND VIEW® MONITOR SYSTEM OPERATION

Basic Information

With the ignition switch in the ON position, move the shift lever to the R (Reverse) position to operate the Intelligent Around View® Monitor.

When the camera is first activated with the bird's-eye view in the display, a red icon (if so equipped) will flash on the screen. This indicates that the sonar system is activated. For additional information on the rear sonar system, see "Rear sonar system" (P. 391).

The screen displayed on the Intelligent Around View® Monitor will automatically return to the previous screen 3 minutes after the CAMERA button has been pressed with the shift lever in a position other than the R (Reverse) position.

Available views

Basic Information

⚠WARNING

- **The distance guide lines and the vehicle width lines should be used as a reference only when the vehicle is on a paved, level surface. The apparent distance viewed on the monitor may be different than the actual distance between the vehicle and displayed objects.**

- **Use the displayed lines and the bird's-eye view as a reference. The lines and the bird's-eye view are greatly affected by the number of occupants, cargo, fuel level, vehicle position, road condition and road grade.**
- **If the tires are replaced with different sized tires, the predicted course lines and the bird's-eye view may be displayed incorrectly.**
- **When driving the vehicle up a hill, objects viewed in the monitor are further than they appear. When driving the vehicle down a hill, objects viewed in the monitor are closer than they appear.**
- **Objects in the rear view will appear visually opposite compared to when viewed in the monitor and outside mirrors.**
- **Use the mirrors or actually look to properly judge distances to other objects.**
- **On a snow-covered or slippery road, there may be a difference between the predicted course lines and the actual course line.**

- **The vehicle width and predicted course lines are wider than the actual width and course.**
- **The displayed lines will appear slightly off to the right, because the rearview camera is not installed in the rear center of the vehicle.**

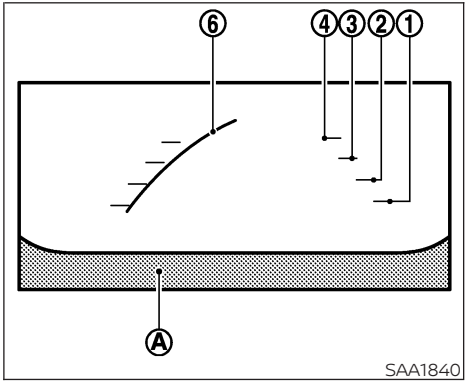

Front view

Front and rear view

Guiding lines that indicate the approximate vehicle width and distance to objects with reference to the vehicle body line Ⓐ are displayed on the monitor.

Distance guide lines:

Indicate distances from the vehicle body:

- Red line ①: approximately 1.5 ft (0.5 m)
- Yellow line ②: approximately 3 ft (1 m)
- Green line ③: approximately 7 ft (2 m)

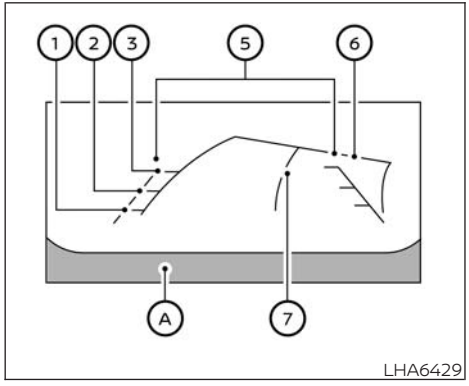

Rear view

- Green line ④: approximately 10 ft (3 m) (if so equipped)

Vehicle width guide lines ⑤

Indicate the approximate vehicle width when backing up.

Predicted course lines ⑥

Indicate the predicted course when operating the vehicle. The predicted course lines will be displayed on the monitor when the steering wheel is turned. The predicted course lines will move depending on how much the steering wheel is turned and will not be displayed while the steering wheel is in the straight-ahead position.

Center guide lines ⑦

Indicates the vehicle's center.

The front view will not be displayed when the vehicle speed is above 6 mph (10 km/h).

NOTE:

When the monitor displays the front view and the steering wheel turns about 90 degrees or less from the straight-ahead position, both the right and left predicted course lines ⑥ are displayed. When the steering wheel turns about 90 degrees or more, a line is displayed only on the opposite side of the turn.

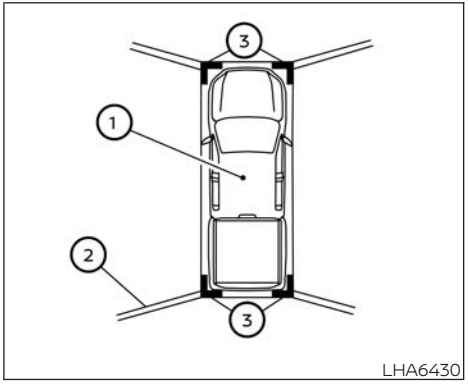

Bird's-eye view

The bird's-eye view shows the overhead view of the vehicle, which helps confirm the vehicle position and the predicted course to a parking space.

The vehicle icon ① shows the position of the vehicle. Note that the apparent distance between objects viewed in the bird's-eye view may differ somewhat from the actual distance to the vehicle.

The areas that the cameras cannot cover ② are indicated in black.

After the ignition switched is placed in the ON position, the non-viewable area ② is highlighted in yellow for 3 seconds after the birds-eye view is displayed.

In addition, the non-viewable corners are displayed in red and will blink for the first 3 seconds ③ to remind the driver to be cautious.

⚠ WARNING

- **Objects in the bird's-eye view will appear further than the actual distance.**
- **Tall objects, such as a curb or vehicle, may be misaligned or not displayed at the seam of the views.**
- **Objects that are above the camera cannot be displayed.**
- **The view of the bird's-eye view may be misaligned when the camera position alters.**
- **A line on the ground may be misaligned and is not seen as being straight at the seam of the views. The misalignment will increase as the line proceeds away from the vehicle.**

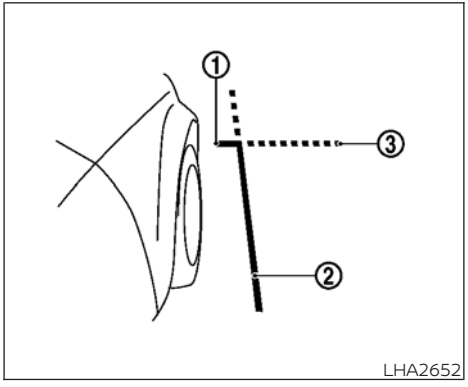

Front-side view

Guiding lines

Guiding lines that indicate the approximate width and the front end of the vehicle are displayed on the monitor.

The front-of-vehicle line ① shows the front part of the vehicle.

The side-of-vehicle line ② shows the approximate vehicle width including the outside mirrors.

The extensions ③ of both the front ① and side ② lines are shown with a green dotted line.

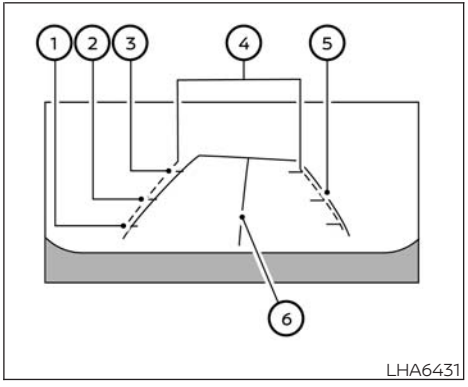

Rear-wide view

Rear-wide view

The rear-wide view shows a wider area on the entire screen and allows the checking of the blind corners on right and left sides. The rear-wide view displays an approximately 180-degree area. The predicted course lines are not displayed when using the rear-wide view.

Distance guide lines

Indicates distances from the vehicle body:

- Red line ①: approximately 1.5 ft (0.5 m)
- Yellow line ②: approximately 3 ft (1 m)
- Green line ③: approximately 7 ft (2 m)

Vehicle width guide lines ④

Indicate the vehicle width when backing up.

Predicted course lines ⑤

Indicate the predicted course when operating the vehicle. The predicted course lines will be displayed on the monitor when the steering wheel is turned. The predicted course lines will move depending on how much the steering wheel is turned and will not be displayed while the steering wheel is in the straight-ahead position.

Center guide lines ⑥

Indicates the vehicle's center.

DIFFERENCE BETWEEN PREDICTED AND ACTUAL DISTANCES

Basic Information

The displayed guidelines and their locations on the ground are for approximate reference only. Objects on uphill or downhill surfaces or projecting objects will be actually located at distances different from those displayed in the monitor relative to the guidelines (refer to illustrations). When in doubt, turn around and view the objects as you are backing up, or park and exit the vehicle to view the positioning of objects behind the vehicle.

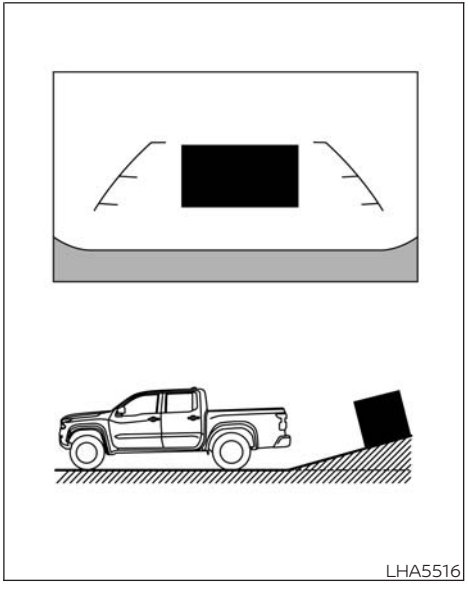

Backing up on a steep uphill

When backing up the vehicle up a hill, the distance guide lines and the vehicle width guide lines are shown closer than the actual distance. Note that any object on the hill is further than it appears on the monitor.

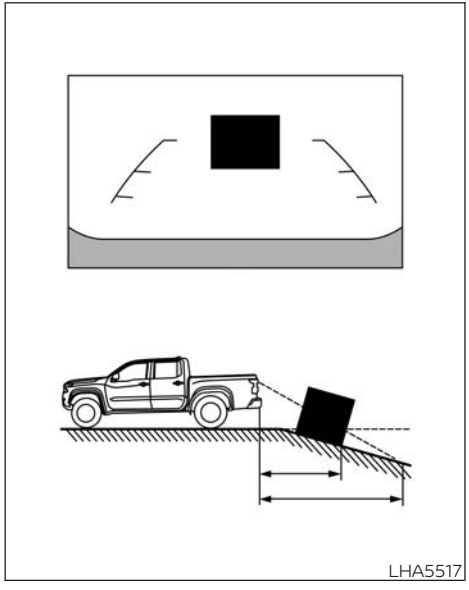

Backing up on a steep downhill

When backing up the vehicle down a hill, the distance guide lines and the vehicle width guide lines are shown farther than the actual distance. Note that any object on the hill is closer than it appears on the monitor.

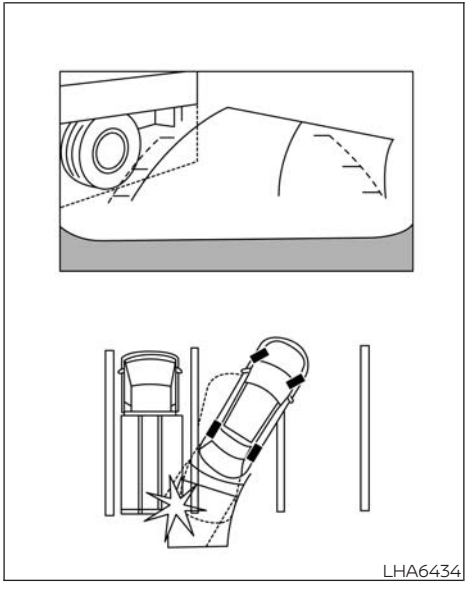

Backing up near a projecting object

The vehicle may seem to nearly clear the object in the display. However, the vehicle may hit the object if it projects over the actual backing up course.

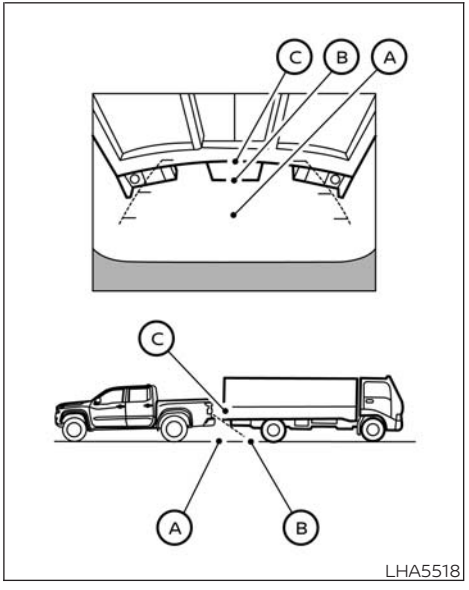

Backing up behind a projecting object

The position Ⓒ is shown farther than the position Ⓑ in the display. However, the position Ⓒ is actually at the same distance as the position Ⓐ. The vehicle may hit the

object when backing up to the position Ⓐ if the object projects over the actual backing up course.

HOW TO PARK WITH PREDICTED COURSE LINES

⚠ WARNING

- **If the tires are replaced with different sized tires, the predicted course lines may be displayed incorrectly.**
- **On a snow-covered or slippery road, there may be a difference between the predicted course line and the actual course line.**
- **If the battery is disconnected or becomes discharged, the predicted course lines may be displayed incorrectly. If this occurs, please perform the following procedures:**
  - **Turn the steering wheel from lock to lock while the engine is running.**
  - **Drive the vehicle on a straight road for more than 5 minutes.**
- **When the steering wheel is turned with the ignition switch in the ACC position, the predicted course lines may be displayed incorrectly.**

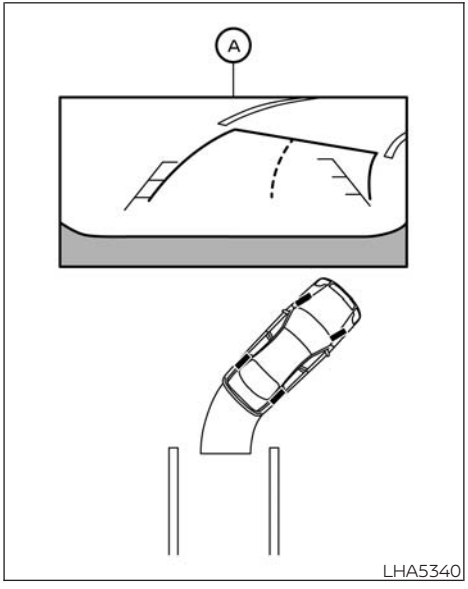

1. Visually check that the parking space is safe before parking your vehicle.
2. The rear view of the vehicle is displayed on the screen Ⓐ when the shift lever is moved to the R (Reverse) position.

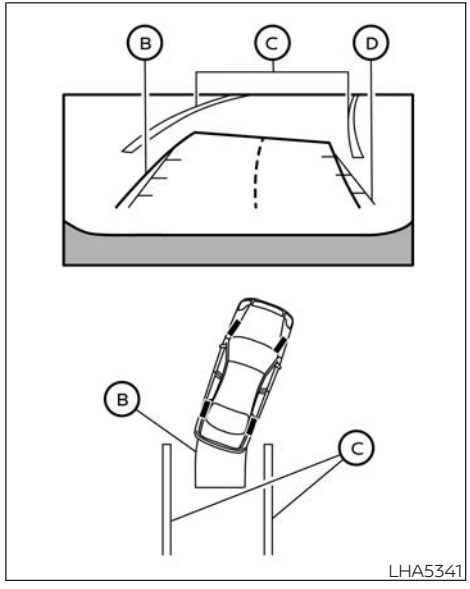

3. Slowly back up the vehicle adjusting the steering wheel so that the predicted course lines Ⓑ enter the parking space Ⓒ.

4. Maneuver the steering wheel to make the vehicle width guide lines Ⓓ parallel to the parking space Ⓒ while referring to the predicted course lines.
5. When the vehicle is parked in the space completely, move the shift lever to the P (Park) position and apply the parking brake.

HOW TO SWITCH THE DISPLAY

With the ignition switch in the ON position, press the CAMERA button or move the shift lever to the R (Reverse) position to operate the Intelligent Around View® Monitor.

The Intelligent Around View® Monitor displays different split screen views depending on the position of the shift lever. Press the CAMERA button to switch between the available views.

If the shift lever is in the R (Reverse) position, the available views are:

- Rear view/bird's-eye view split screen
- Rear view/front-side view split screen
- Rear-wide view

If the shift lever is in the P (Park) or D (Drive) position, the available views are:

- Front view/bird's-eye view split screen
- Front view/front-side view split screen

The display will switch from the Intelligent Around View® Monitor screen when:

- The shift lever is in the D (Drive) position and the vehicle speed increases above approximately 6 mph (10 km/h).
- A different screen is selected.

OFF-ROAD MODE (if so equipped)

When the shift lever is out of the R (Reverse) position, selecting the 4LO position using the 4WD shift switch affects the Intelligent Around View® Monitor display as follows:

– Selecting the 4LO position will activate the Intelligent Around View® Monitor. The front view/front-side view split screen will be displayed.
– When the ignition switch is placed in the ON position with the 4LO position selected, the front view/front-side view split screen will be displayed.
– When the vehicle is shifted to the 4LO position with the bird's-eye view displayed, the passenger side of the display will change to the front-side view.

When in the off-road mode, the Intelligent Around View® Monitor will not return to the previous screen. The screen displayed on the Intelligent Around View® Monitor will automatically return to the previous screen 3 minutes after the vehicle was shifted out of the 4LO position.

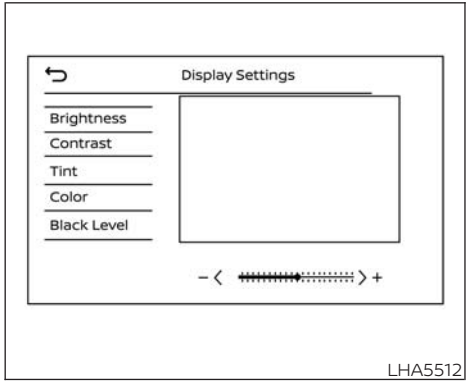

ADJUSTING THE SCREEN

1. Touch the "Settings" key.
2. Touch the "Camera" key.
3. Touch the "Display Settings" key.
4. Touch the "Brightness", "Contrast", Tint", "Color", or "Black Level" key.
5. Adjust the item by touching the "+" or "–" key on the touch-screen display.

NOTE:

Do not adjust any of the display settings of the Intelligent Around View® Monitor while the vehicle is moving. Make sure the parking brake is firmly applied.

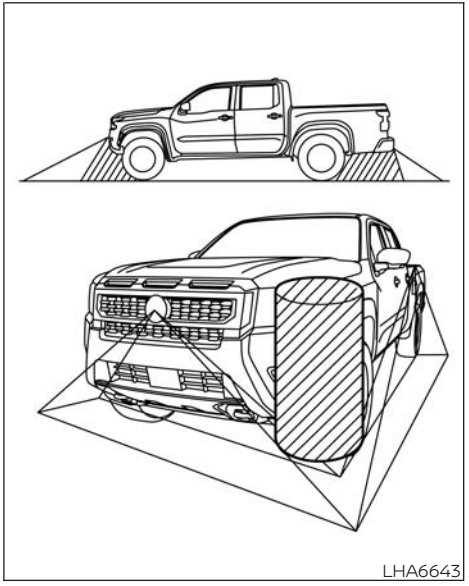

INTELLIGENT AROUND VIEW® MONITOR SYSTEM LIMITATIONS

Basic Information

⚠ WARNING

Listed below are the system limitations for Intelligent Around View® Monitor. Failure to operate the vehicle in accordance with these system limitations could result in serious injury or death.

- **Do not use the Intelligent Around View® Monitor with the outside mirrors in the stored position, and make sure that the tailgate is securely closed when operating the vehicle using the Intelligent Around View® Monitor.**
- **The apparent distance between objects viewed on the Intelligent Around View® Monitor differs from the actual distance.**
- **The cameras are installed on the front grille, the outside mirrors and above the rear license plate. Do not put anything on the vehicle that covers the cameras.**
- **When washing the vehicle with high pressure water, be sure not to spray it around the cameras. Otherwise, water may enter the camera unit causing water condensation on the lens, a malfunction, fire or an electric shock.**
- **Do not strike the cameras. They are precision instruments. Doing so could cause a malfunction or cause damage resulting in a fire or an electric shock.**

There are some areas where the system will not show objects and the system does not warn of moving objects. When in the front or rear view display, an object below the bumper or on the ground may not be viewed. When in the bird's-eye view, a tall object near the seam of the camera viewing areas will not appear in the monitor.

The following are operating limitations and do not represent a system malfunction:

- There may be a delay when switching between views.
- When the temperature is extremely high or low, the screen may not display objects clearly.
- When strong light directly shines on the camera, objects may not be displayed clearly.
- The screen may flicker under fluorescent light.
- The colors of objects on the Intelligent Around View® Monitor may differ somewhat from the actual color of objects.
- Objects on the Intelligent Around View® Monitor may not be clear and the color of the object may differ in a dark environment.
- There may be differences in sharpness between each camera view of the bird's-eye view.
- Do not use wax on the camera lens. Wipe off any wax with a clean cloth that has been dampened with a diluted mild cleaning agent, then wipe with a dry cloth.

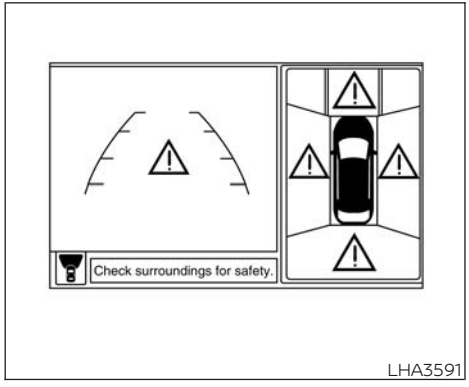

LHA3591

System temporarily unavailable

When the "!" icon is displayed on the screen, there are abnormal conditions in the Intelligent Around View® Monitor. This will not hinder normal driving operation but it is recommended that the system be inspected. It is recommended that you visit a NISSAN dealer for this service.

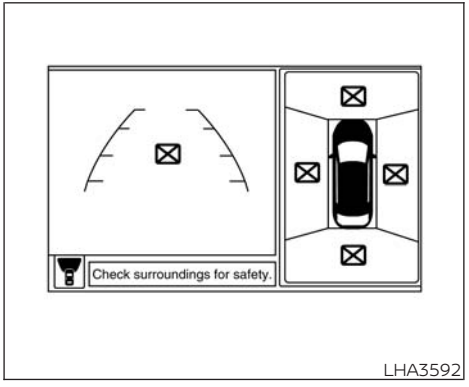

LHA3592

When the "[X]" icon is displayed on the screen, the camera image may be receiving temporary electronic disturbances from surrounding devices. This will not hinder normal driving operation but it is recommended that the system be inspected if it occurs frequently. It is recommended that you visit a NISSAN dealer for this service.

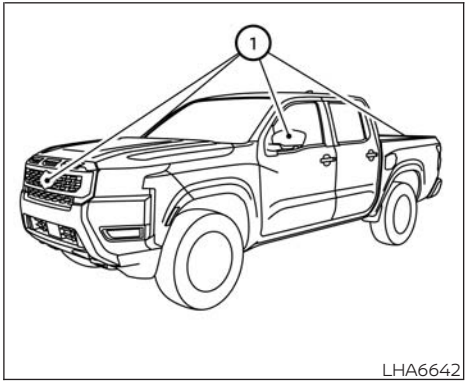

LHA6642

SYSTEM MAINTENANCE

⚠ CAUTION

- **Do not use alcohol, benzine or thinner to clean the camera. This will cause discoloration.**
- **Do not damage the cameras as the monitor screen may be adversely affected.**

If dirt, rain or snow accumulates on any of the cameras ①, the Intelligent Around View® Monitor may not display objects clearly. Clean the camera by wiping with a cloth dampened with a diluted mild cleaning agent and then wiping with a dry cloth.

MOVING OBJECT DETECTION (MOD) (if so equipped)

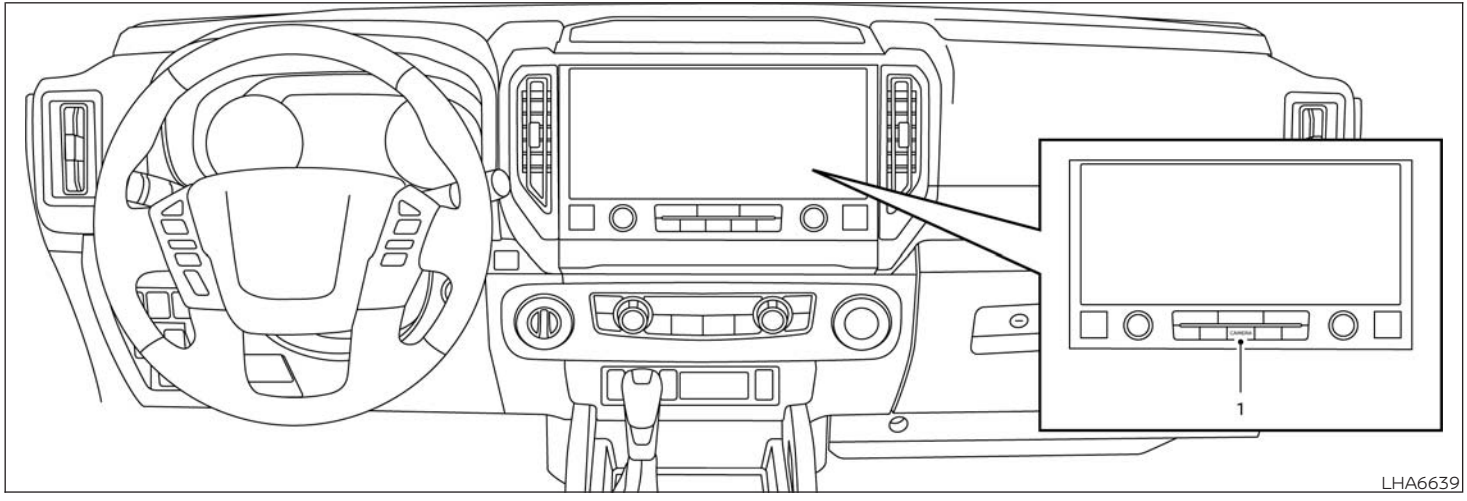

BASIC INFORMATION

1. CAMERA button

⚠ WARNING

- **Failure to follow the warnings and instructions for proper use of the Moving Object Detection system could result in serious injury or death.**
- **The MOD system is not a substitute for proper vehicle operation and is not designed to prevent contact with objects surrounding the vehicle. When maneuvering, always use the outside mirrors and rearview mirror and turn and check the surroundings to ensure it is safe to maneuver.**
- **The system is deactivated at speeds above 6 mph (10 km/h). It is reactivated at lower speeds.**
- **The MOD system is not designed to detect surrounding stationary objects.**

The MOD system can inform the driver of moving objects near the vehicle when backing out of garages, maneuvering in parking lots and in other such instances.

The MOD system detects moving objects by using image processing technology on the image shown in the display.

MOD SYSTEM OPERATION

The MOD system will turn on automatically under the following conditions:

- When the shift lever is in the R (Reverse) position.
- When vehicle speed decreases below approximately 6 mph (10 km/h) and the camera screen is displayed.

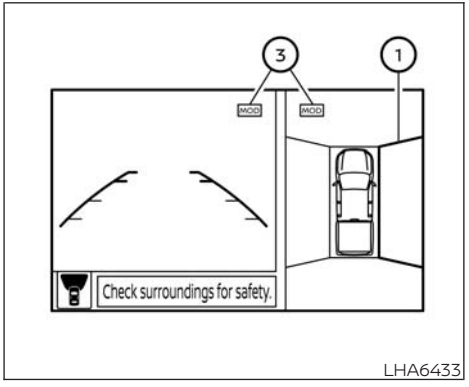

Front and bird's-eye views

The MOD system operates in the following conditions when the camera view is displayed:

- When the shift lever is in the P (Park) or N (Neutral) position and the vehicle is stopped, the MOD system detects moving objects in the bird's-eye view. The MOD system will not operate if the outside mirrors are moving in or out, in the stowed position, or if either front door is opened.

Rear and bird's-eye views

- When the shift lever is in the D (Drive) position and the vehicle speed is below approximately 6 mph (10 km/h), the MOD system detects moving objects in the front view.
- When the shift lever is in the R (Reverse) position and the vehicle speed is below approximately 6 mph (10 km/h), the MOD system detects moving objects in the rear view. The MOD system will not operate if the tailgate is open.

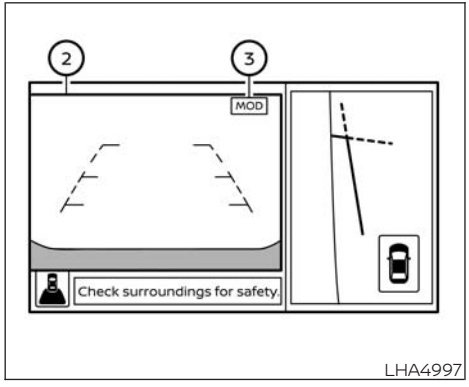

Rear and front-side views

The MOD system does not detect moving objects in the front-side view. The MOD icon is not displayed on the screen when in this view.

When the MOD system detects moving objects near the vehicle, a chime will be heard and a yellow frame will be displayed on the view where the objects are detected. While the MOD system continues to detect moving objects, the yellow frame continues to be displayed.

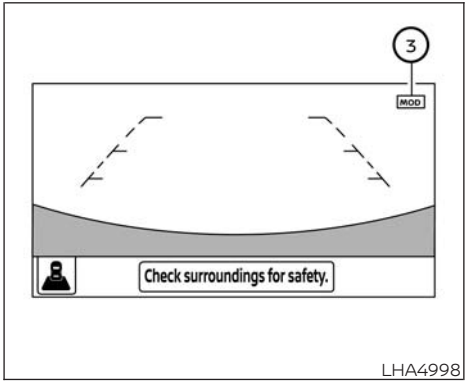

Rear-wide view

NOTE:

While the RCTA chime is beeping, the MOD system will not chime.

In the bird's-eye view, the yellow frame ① is displayed on each camera image (front, rear, right, left) depending on where moving objects are detected.

The yellow frame ② is displayed on each view in the front view and rear view modes.

A blue MOD icon ③ is displayed in the view where the MOD system is operative. A gray MOD icon is displayed in the view where the MOD system is not operative.

If the MOD system is turned off, the MOD icon ③ is not displayed.

TURNING MOD ON AND OFF (if so equipped)

Some vehicles include the option to allow the MOD system to be turned on or off.

To turn the MOD system on or off:

1. Press the ◄ or ► button on the steering wheel to navigate to the "Settings" screen.
2. Using the ▲▼ buttons, select "Driver Assistance" and press the ENTER button.
3. Select "Parking Aids" and press the ENTER button.
4. Toggle ON or OFF "Moving Object" using the ENTER button.

You can also turn the MOD on or off by pressing the Parking Aids system switch (if so equipped).

MOD SYSTEM LIMITATIONS

⚠ WARNING

Listed below are the system limitations for MOD. Failure to operate the vehicle in accordance with these system limitations could result in serious injury or death.

- **Do not use the MOD system when towing a trailer. The system may not function properly.**
- **Excessive noise (for example, audio system volume or open vehicle window) will interfere with the chime sound, and it may not be heard.**
- **The MOD system performance will be limited according to environmental conditions and surrounding objects such as:**
  - **When there is low contrast between background and the moving objects.**
  - **When there is a blinking source of light.**
  - **When strong light such as another vehicle's headlight or sunlight is present.**
  - **When camera orientation is not in its usual position, such as when a mirror is folded.**
  - **When there is dirt, water drops or snow on the camera lens.**
  - **When the position of the moving objects in the display is not changed.**
- **The MOD system might detect flowing water droplets on the camera lens, white smoke from the muffler, moving shadows, etc.**
- **The MOD system may not function properly depending on the speed, direction, distance or shape of the moving objects.**
- **If your vehicle sustains damage to the parts where the camera is installed, leaving it misaligned or bent, the sensing zone may be altered and the MOD system may not detect objects properly.**
- **When the temperature is extremely high or low, the screen may not display objects clearly. This is not a malfunction.**

NOTE:

The blue MOD icon will change to orange if one of the following has occurred:

- **When the system is malfunctioning.**
- **When the component temperature reaches a high level (icon will blink).**
- **When the rearview camera has detected a blockage (icon will blink).**

If the icon light continues to illuminate orange, have the MOD system checked. It is recommended that you visit a NISSAN dealer for this service.

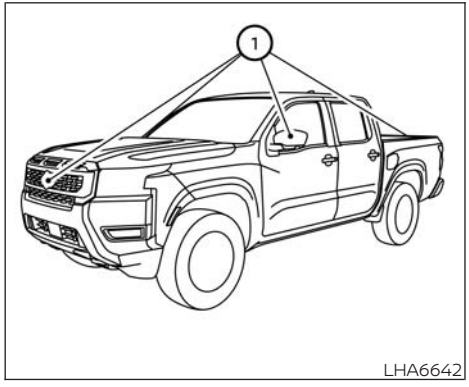

SYSTEM MAINTENANCE

CAUTION

- **Do not use alcohol, benzine or thinner to clean the camera. This will cause discoloration.**
- **Do not damage the camera as the monitor screen may be adversely affected.**

If dirt, rain or snow accumulates on any of the cameras ①, the MOD system may not operate properly. Clean the camera by wiping with a cloth dampened with a diluted mild cleaning agent and then wiping with a dry cloth.

VENTS

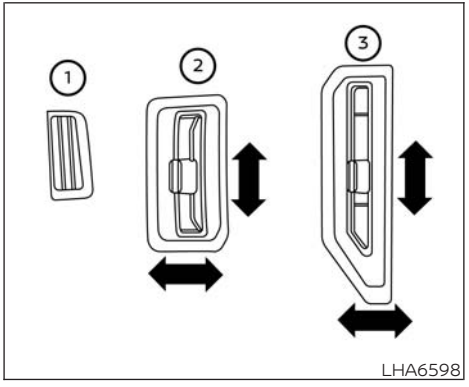

Adjust air flow direction for the driver and front passenger side vents ② or center vents ③ by moving the vent slide and/or vent assemblies. The defrost vents ① located above the driver and front passenger side vents cannot be adjusted or closed.

HEATER AND AIR CONDITIONER (manual) (if so equipped)

BASIC INFORMATION

WARNING

- **The air conditioner cooling function operates only when the engine is running.**
- **Do not leave children or adults who would normally require the assistance of others alone in your vehicle. Pets should also not be left alone. They could accidentally injure themselves or others through inadvertent operation of the vehicle. Also, on hot, sunny days, temperatures in a closed vehicle could quickly become high enough to cause severe or possibly fatal injuries to people or animals.**
- **Do not use the recirculation mode for long periods as it may cause the interior air to become stale and the windows to fog up.**

NOTE:

- **Odors from inside and outside the vehicle can build up in the air conditioner unit. Odor can enter the passenger compartment through the vents.**

- **When parking, set the heater and air conditioner controls to turn off air recirculation to allow fresh air into the passenger compartment. This should help reduce odors inside the vehicle.**

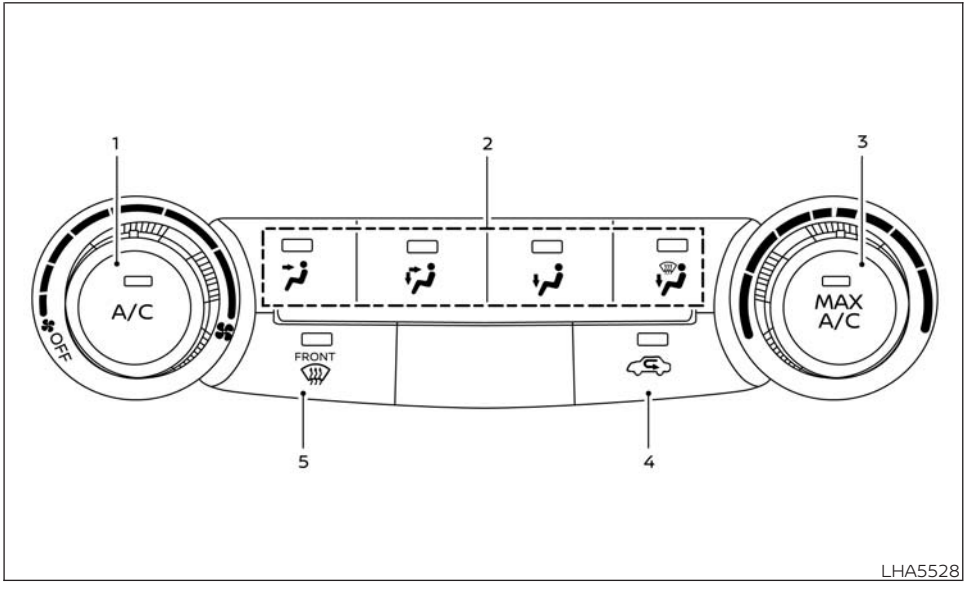

CONTROLS

Basic Information

1. Fan speed control dial / system OFF dial / A/C (air conditioning) button
2. Air flow control buttons
3. Temperature control dial / MAX A/C button
4. Air recirculation button
5. Front windshield defrost button

Fan speed control dial

The fan speed control dial turns the fan on and off and controls fan speed.

Fan speed control dial — OFF mode

Setting the fan speed control dial to the off position will turn off the fan and the air recirculation indicator light will turn on. To get fresh air in fan off mode, press the air recirculation button to turn off the indicator. In fan off mode, the mode buttons can be selected to change the air vent distribution (if the air recirculation mode is off).

Air flow control buttons

The air flow control buttons allow you to select the air flow outlets.

MAX A/C	Air flows from center and side vents with maximum cooling.
	Air flows from center and side vents.
	Air flows from center and side vents and foot outlets.
	Air flows mainly from foot outlets and side vents.
	Air flows from defroster outlets and foot outlets.
FRONT	Air flows mainly from defroster outlets.

Temperature control dial

The temperature control dial allows you to adjust the temperature of the outlet air. To lower the temperature, turn the dial to the left. To increase the temperature, turn the dial to the right.

Air recirculation button

ON position (Indicator light on)
Interior air is recirculated inside the vehicle.

Press the button to the ON position when:

- driving on a dusty road.
- to prevent traffic fumes from entering passenger compartment.
- for maximum cooling when using the air conditioner.

When the outside temperature exceeds approximately 70°F (21°C), the air conditioning system may default to air recirculation mode automatically to reduce overall power consumption. To exit air recirculation mode, select the fresh air intake button to enter fresh air mode.

OFF position (Indicator light off)
If outside air is desired in off mode, press the recirculation button until the indicator turns off.

If fogging occurs, press the FRONT front windshield defrost button.

A/C (air conditioner) button

Start the engine, turn the fan speed control dial to the desired position and press the A/C button to turn on the air conditioner. To turn off the air conditioner, press the A/C button again.

The air conditioner cooling function operates only when the engine is running.

HEATER OPERATION

Heating

This mode is used to direct heated air to the foot outlets. Some air also flows from the defrost outlets.

1. Press the button to the OFF position for normal heating. The indicator light on the button will go off.
2. Press the air flow control button.
3. Turn the fan speed control dial to the desired position.

4. Turn the temperature control dial to the desired position between the middle and the hot position.

Ventilation

This mode directs outside air to the side and center vents.

1. Press the button to the off position. The indicator light on the button will go off.
2. Press the air flow control button.
3. Turn the fan speed control dial to the desired position.
4. Turn the temperature control dial to the desired position.

Defrosting or defogging

This mode directs the air to the defrost outlets to defrost/defog the windows.

1. Press the defrost/defog button.
2. Turn the fan speed control dial to the desired position.
3. Turn the temperature control dial to the desired position between the middle and the hot position.

- To quickly remove ice or fog from the windows, turn the fan speed control dial to the highest setting and the temperature control to the full HOT position.
- When the position is selected, the air conditioner automatically turns on. This dehumidifies the air which helps defog the windshield. The mode automatically turns off, allowing outside air to be drawn into the passenger compartment to further improve the defogging performance. Under this condition, the indicator light on the A/C button indicator will not turn on if the user had selected the A/C off. Turning off the air conditioning via the A/C button is not allowed In this mode. If the A/C button indicator was on when entering this mode, and the A/C button is selected in this mode, the A/C button indicator will turn off, but the A/C compressor will still be automatically enabled. The recirculation button indicator will not illuminate if the button is pressed in this mode.
- Defrosting performance can be increased by increasing the fan setting.

Bi-level heating

The bi-level mode directs warmed air to the side and center vents and to the front and rear floor outlets.

1. Press the button to the off position. The indicator light on the button will go off.
2. Press the air flow control button.
3. Turn the fan speed control dial to the desired position.
4. Turn the temperature control dial to the desired position.

Heating and defogging

This mode heats the interior and defogs the windshield.

1. Press the air flow control button.
2. Turn the fan speed control dial to the desired position.
3. Turn the temperature control dial to the desired position between the middle and the hot position.

- When the position is selected, the air conditioner automatically turns on. Under this condition, the indicator light on the A/C button indicator will not turn on if the user had selected A/C off. Turning off the air conditioning via the A/C button is not allowed in this mode. If the A/C button indicator was on when entering this mode, and the A/C button is selected in this mode, the A/C compressor will still be automatically enabled. It is recommended that mode be turned off for maximum defogging. The recirculation button can be selected in this mode to block outside odors. However, for maximum defogging in this mode, it is recommended to turn recirculation off when possible.
- Defrosting performance can be increased by increasing the fan setting.

Operating tips

Clear snow and ice from the wiper blades and air inlet in front of the windshield. This improves heater operation.

AIR CONDITIONER OPERATION

Basic Information

Start the engine, turn the fan speed control dial to the desired position, and press the A/C button to activate the air conditioner. When the air conditioner is on, cooling and dehumidifying functions are added to the heater operation.

The air conditioner cooling function operates only when the engine is running.

Cooling

This mode is used to cool and dehumidify the air.

1. Press the button to the off position.
2. Press the air flow control button.
3. Turn the fan speed control dial to the desired position.
4. Press the A/C button.
5. Turn the temperature control dial to the desired position between the middle and the cold position.

- For quick cooling when the outside temperature is high, press the button to the on position. Be sure to return the to the off position for normal cooling. The indicator light on the button will go off. You may also select MAX A/C for quick cooling.

Dehumidified heating

This mode is used to heat and dehumidify the air.

1. Press the button to the off position. The indicator light on the button will go off.
2. Press the air flow control button.
3. Turn the fan speed control dial to the desired position.
4. Press the A/C button.
5. Turn the temperature control dial to the desired position.

Dehumidified defogging

This mode is used to defog the windows and dehumidify the air.

1. Press the front defroster button.
2. Turn the fan speed control dial to the desired position.

When the FRONT or positions are selected, the air conditioner automatically turns on. The air conditioning system will continue to operate until the fan speed control dial is turned to OFF, the air conditioner is turned OFF, or the vehicle is shut off. If a position other than the FRONT front defrost air flow button is selected, the A/C compressor will not turn off even if the user had selected A/C off prior to entering defrost. In FRONT front defrost or foot defrost the indicator light on the A/C button will not turn on if the user had selected A/C off. Turning off the air conditioning via the A/C button is not allowed in this mode. If the A/C button indicator was on when entering this mode, and the A/C button is selected in this mode, the A/C button indicator will turn off, but the A/C compressor will still be automatically enabled. This dehumidifies the air which helps defog the windshield. The mode automatically turns off, allowing outside air to be drawn into the passenger compartment to further improve the defogging performance.

3. Turn the temperature control dial to the desired position.

Operating tips

- Keep the windows closed while the air conditioner is in operation.
- After parking in the sun, drive for 2 or 3 minutes with the windows open to vent hot air from the passenger compartment. Then, close the windows. This allows the air conditioner to cool the interior more quickly.
- **The air conditioning system should be operated for approximately 10 minutes at least once a month. This helps prevent damage to the system due to lack of lubrication.**
- A visible mist may be seen coming from the ventilators in hot, humid conditions as the air is cooled rapidly. This does not indicate a malfunction.
- **If the engine coolant temperature gauge indicates engine coolant temperature over the normal range, turn the air conditioner off. For additional information, see "If your vehicle overheats" (P. 417).**

AIR FLOW CHARTS

The following charts show the button and dial positions for **MAXIMUM AND QUICK** heating, cooling or defrosting. For additional information on heating and cooling, see "Heater and air conditioner (manual)" (P. 252). **The air recirculation ( ) button should always be in the OFF position for heating and defrosting.**

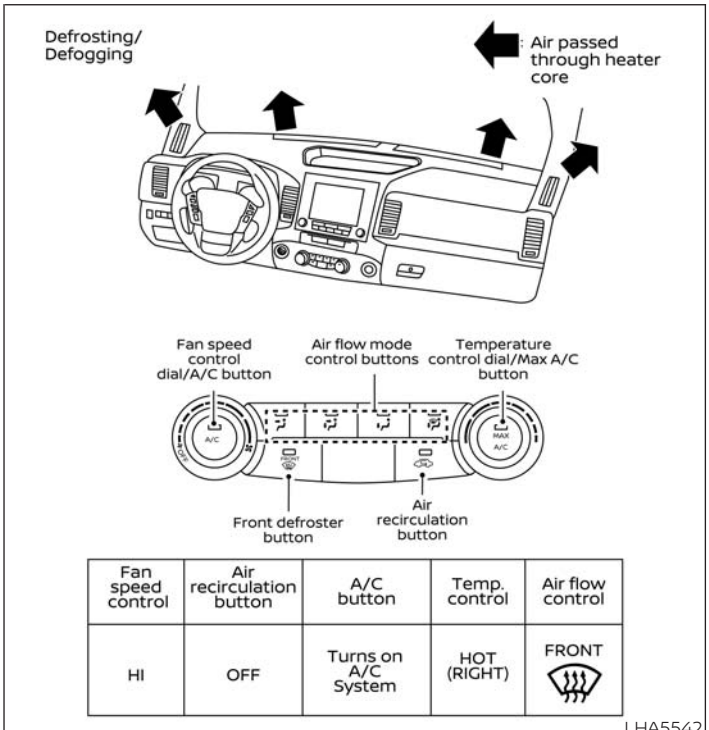

Fan speed control	Air recirculation button	A/C button	Temp. control	Air flow control
HI	OFF	Turns on A/C System	HOT (RIGHT)	FRONT

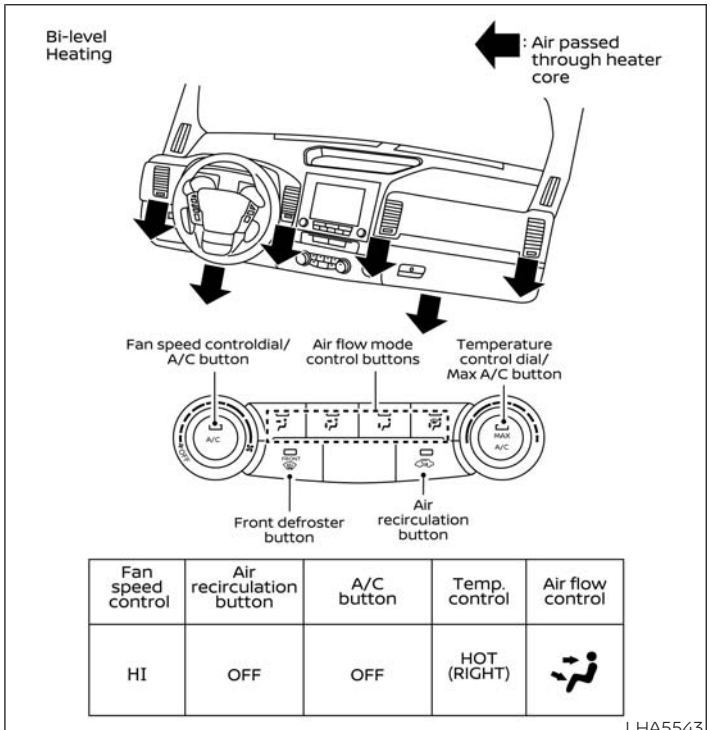

Fan speed control	Air recirculation button	A/C button	Temp. control	Air flow control
HI	OFF	OFF	HOT (RIGHT)	

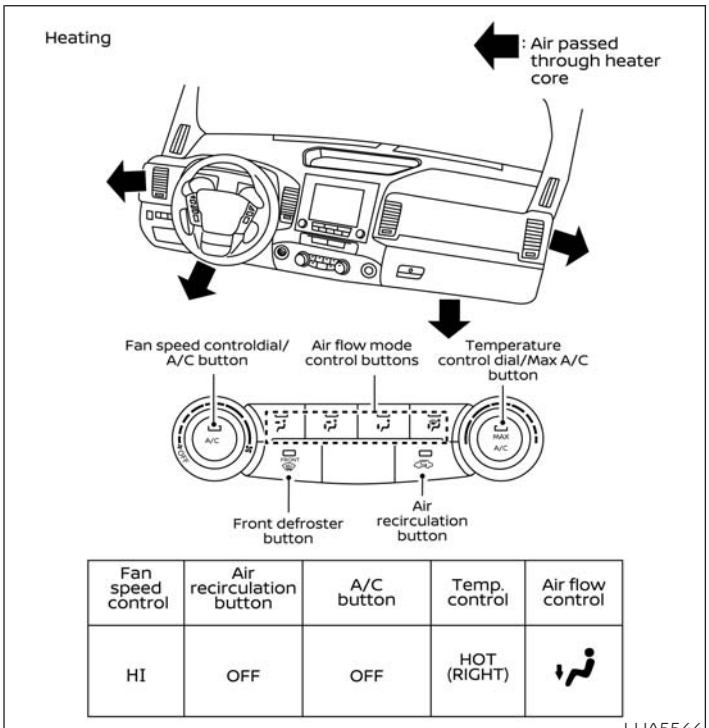

Fan speed control	Air recirculation button	A/C button	Temp. control	Air flow control
HI	OFF	OFF	HOT (RIGHT)	

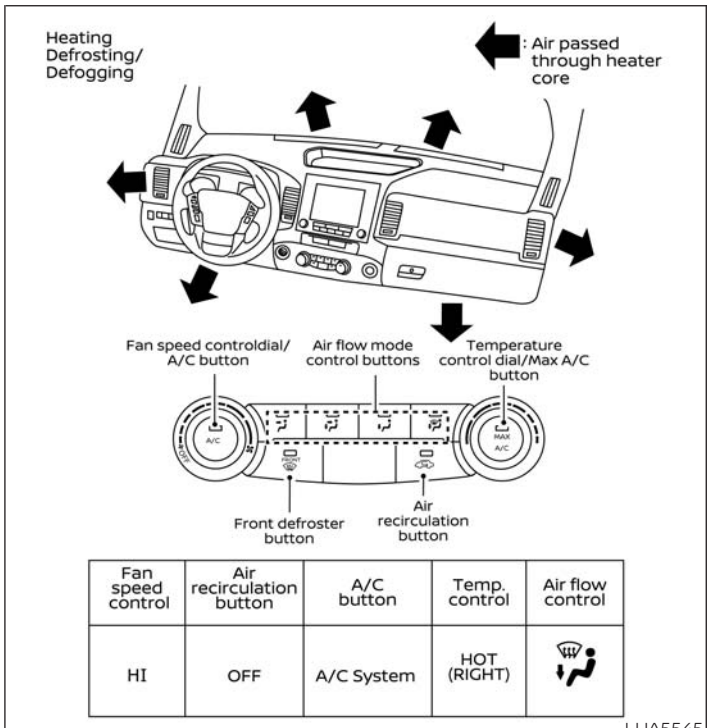

Fan speed control	Air recirculation button	A/C button	Temp. control	Air flow control
HI	OFF	A/C System	HOT (RIGHT)	

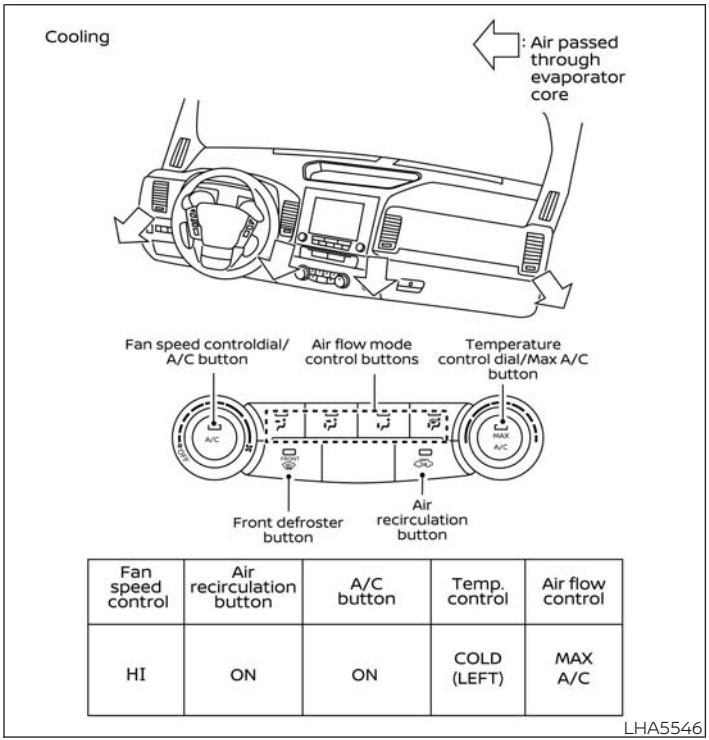

Fan speed control	Air recirculation button	A/C button	Temp. control	Air flow control
HI	ON	ON	COLD (LEFT)	MAX A/C

HEATER AND AIR CONDITIONER (automatic) (if so equipped)

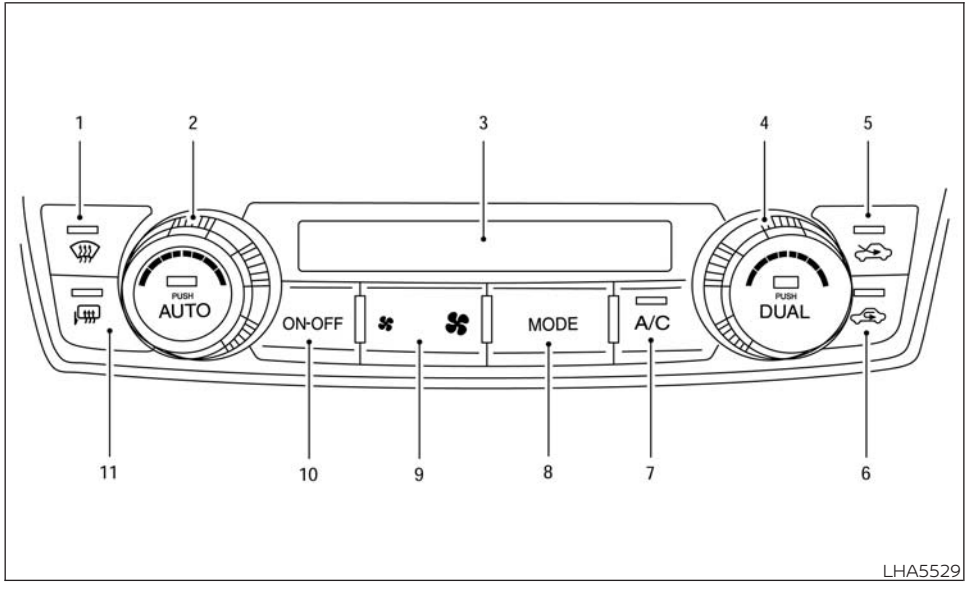

BASIC INFORMATION

1. Front defroster button
2. Temperature control dial (driver's side)/ AUTO button
3. Display screen
4. Temperature control dial (passenger's side)/DUAL button
5. Fresh air intake button
6. Air recirculation button
7. A/C (air conditioner) button
8. MODE (manual air flow control) button
9. Fan speed control buttons
10. ON-OFF button
11. Outside mirror defroster switch (if so equipped)

WARNING

- **The air conditioner cooling function operates only when the engine is running.**
- **Do not leave children or adults who would normally require the assistance of others alone in your vehicle. Pets should also not be left alone. They could accidentally injure themselves or others through inadvertent operation of the vehicle. Also, on hot, sunny days, temperatures in a closed vehicle could quickly become high enough to cause severe or possibly fatal injuries to people or animals.**
- **Do not use the recirculation mode for long periods as it may cause the interior air to become stale and the windows to fog up.**

NOTE:

Odors from inside and outside the vehicle can build up in the air conditioner unit. Odor can enter the passenger compartment through the vents.

While the engine is stopped by the Idling Stop System, activating the front defroster will cause the engine to automatically restart. While the engine is running, activating the front defroster or the outside mirror defroster will prevent the Idling Stop System from automatically stopping the engine.

When the temperature inside the vehicle is higher than approximately 86 °F (30 °C) ISS engine off will be prohibited. (When the air conditioner is off, the Idling Stop System will operate).

When the engine is stopped by the Idling Stop System, heater and air conditioner performance may be reduced. To keep full heater and air conditioner performance, restart the engine by pushing the Idling Stop OFF switch.

The blower may reduce to avoid excess hot/cold air under some conditions. When engine on resumes, the blower setting will be restored. For additional information, see "Idling Stop System" (P. 395).

AUTOMATIC OPERATION

Cooling or heating (auto)

This mode may be normally used all year round as the system automatically works to keep a constant temperature. Air flow distribution and fan speed are also controlled automatically.

1. Press the AUTO button.
2. Turn the temperature dial to the left or right to set the desired temperature. Driver and passenger temperatures can be set independently. Press the DUAL button to activate dual climate control functions. Turn the passenger's side temperature control dial to the left or right to set the desired passenger's temperature.

- Adjust the temperature dial to about 75°F (24°C) for normal operation.
- The temperature of the passenger compartment will be maintained automatically. Air flow distribution, fan speed and A/C on/off are also controlled automatically. The A/C button indicator will remain in the last user setting. Under this condition, the indicator light on the A/C button indicator will not turn on if the user had not selected the A/C button off. If the A/C button is selected in this mode, the A/C button indicator will turn off, but the A/C compressor will still be automatically enabled. For additional information, see "Air flow control" (P. 265).
- A visible mist may be seen coming from the vents in hot, humid conditions as the air is cooled rapidly. This does not indicate a malfunction.

Heating

When you need to heat only, use this mode.

1. Press the AUTO button.
2. Turn the temperature control dial to the left or the right to set the desired temperature. Driver and passenger temperatures can be set independently. Press the DUAL button to activate dual climate control functions. Turn the passenger's side temperature control dial to the left or right to set the desired passenger's temperature.

- The temperature of the passenger compartment will be maintained automatically. Air flow distribution and fan speed are also controlled automatically.
- Do not set the temperature lower than the outside air temperature. Otherwise, the system may not work properly.
- Not recommended if windows fog up.

Dehumidified defrosting or defogging

1. Press the defroster control button to turn the system on. The indicator light in the button will illuminate.
2. The fan will automatically change to blower speed 5. Blower speed can be changed by pressing the fan speed control button. Increase the fan to 6 or 7 for more aggressive defogging performance.
3. Turn the temperature dial to the left or right to set the desired temperature.

- To quickly remove ice from the outside of the windows, press the fan speed control button to the maximum position.
- As soon as possible after the windshield is clean, press the AUTO button to return to the auto mode.
- When the control is activated, the air conditioner will automatically be turned on. This dehumidifies the air which helps defog the windshield. Under this condition, the indicator light on the A/C button indicator will not turn on if the user had selected A/C off prior to entering this mode. Turning off the air condition via the A/C button is not allowed in this mode. If the A/C button indicator was on when entering this mode, and the A/C button is selected in this mode, the A/C compressor will still be automatically enabled. The air recirculation mode automatically turns off, allowing outside air to be drawn into the passenger compartment to further improve the defogging performance.

Remote Engine Start with Intelligent Climate Control (if so equipped)

Vehicles equipped with automatic climate controls and Remote Engine Start function may go into automatic heating or cooling mode when Remote Engine Start is activated depending on outside and cabin temperatures. During this period, the climate control display and buttons will be inoperable until the ignition switch is placed in the ON position. In Remote Engine Start defrosting mode, the outside mirror defroster (if so equipped) and heated steering wheel (if so equipped) may be activated automatically.

Voice Recognition logic (if so equipped)

When the climate control system is on, the front and rear (if so equipped) fan speeds may be automatically lowered so that commands are more easily recognized. Fan speed can be adjusted using the fan speed decrease and increase buttons, if desired.

MANUAL OPERATION

Fan speed control

Press the fan speed control buttons to manually control the fan speed.

Press the AUTO button to return to automatic control of the fan speed.

When adjusting the manual fan from auto mode, the outlet direction (floor, floor/defrost, vent, bi-level) will still automatically change. To fix the outlet to a manual mode, select the desired air flow location using the MODE button.

Temperature control dial

The temperature control dial allows you to adjust the temperature of the outlet air. To lower the temperature, turn the dial to the left. To increase the temperature, turn the dial to the right. Temperature can be adjusted on the driver's and passenger's side.

Air recirculation

Press the air recirculation button to recirculate interior air inside the vehicle when:

- driving on a dusty road
- to prevent traffic fumes from entering passenger compartment.
- for maximum cooling when using the air conditioning system.

Press the AUTO button to return to automatic mode.

The air recirculation button will not be activated or allowed when the air conditioner is in mode.

When the outside temperature exceeds approximately 70°F (21°C), the air conditioning system may default to air recirculation mode automatically to reduce overall power consumption. To exit air recirculation mode, select the fresh air intake button to enter fresh air mode.

In Floor/Defrost mode, the recirculation button can be selected to block outside odors. However, for maximum defogging in this mode, it is recommended to turn recirculation off when possible.

Fresh air intake

Press the fresh air intake button to draw outside air into the passenger compartment.

Automatic intake air control

In the AUTO mode, the intake air will be controlled automatically. When the outside temperature exceeds approximately 70°F (21°C), the air conditioning system may default to air recirculation mode automatically to reduce overall power consumption. To exit air recirculation mode, select the fresh air intake button to enter fresh air mode. The air recirculation indicator will turn off, the fresh air indicator will turn on.

To manually control the intake air, press the fresh air intake button. To return to the automatic control mode if the fresh air indicator is illuminated, press and hold the fresh air intake button for about 2 seconds. The fresh air indicator and air recirculation indicator lights will flash twice, and then the intake air will be controlled automatically. To return to the automatic control mode if the air recirculation icon is illuminated, press and hold the air recirculation or the AUTO button for about 2 seconds. The air recirculation indicator and fresh air intake indicator lights will flash twice and the intake air will be controlled automatically. When OFF is selected, the intake door is automatically forced to recirculate. To get fresh air in OFF mode, select the fresh air intake button. The MODE can be changed in OFF mode to direct the flow of incoming air if intake is set to fresh.

A/C (air conditioner) button

Start the engine, turn the fan speed control buttons to the desired position and press the A/C button to turn on the air conditioner. To turn off the air conditioner, press the A/C button again. In auto mode, the air conditioner will be on even if the A/C button indicator is off at temperatures approximately at or above freezing.

The air conditioner cooling function operates only when the engine is running.

Air flow control

Press the MODE button to manually control air flow and select the air outlet.

- Air flows from center and side vents.
- Air flows from center and side vents and foot outlets.
- Air flows mainly from foot outlets.
- Air flows from defroster and foot outlets.

To turn system off

Press the ON-OFF button.

Outside mirror defroster switch (if so equipped)

For additional information, see "Outside mirror defroster switch" (P. 148).

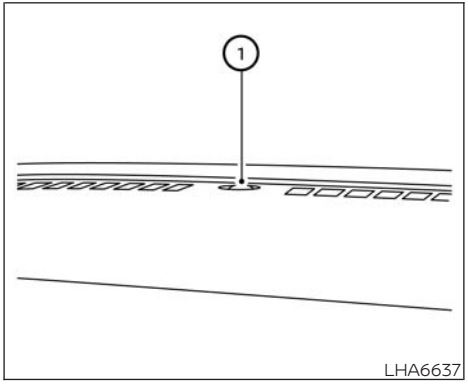

OPERATING TIPS

The sunload sensor (if so equipped) ①, located on the top center of the instrument panel, helps the system maintain a constant temperature. Do not put anything on or around this sensor.

- When the climate system is in automatic operation and the engine coolant temperature and outside air temperature are low, the air flow outlet may default to defroster mode for approximately 2 minutes 30 seconds. This is not a malfunction. After the engine coolant temperature warms up, the air flow outlet will return to foot mode and operation will continue normally.
- When the outside and interior cabin temperatures are moderate to high, the intake setting may default to turn off air recirculation to allow fresh air into the passenger compartment. You may notice air flow from the foot mode, bi-level mode, or side demist vent outlets for a maximum of 15 seconds. This may occur when previous climate setting was system off. This is not a malfunction. After the initial warm air is expelled, the intake will return to automatic control, air flow outlet will return to previous settings, and operation will continue normally. To exit, press any climate control button.
- Keep the windows closed while the air conditioner is in operation.
- If you feel that the air flow mode you have selected and the outlets the air is coming out do not match, select the mode.
- When you change the air flow mode, you may feel air flow from the foot outlets for just a moment. This is not a malfunction.
- When the ignition is placed in the ON position, in some fogging or high cabin temp conditions, air may flow automatically to the foot outlets for 3 to 7 seconds to purge the hot air in the system.

SERVICING AIR CONDITIONER

The air conditioner system in your NISSAN vehicle is charged with a refrigerant designed with the environment in mind.

This refrigerant does not harm the earth's ozone layer.

Special charging equipment and lubricant is required when servicing your NISSAN air conditioner. Using improper refrigerants or lubricants will cause severe damage to your air conditioner system. For additional information, see "Air conditioner system refrigerant and oil recommendations" (P. 507).

It is recommended that you visit a NISSAN dealer to service your "environmentally friendly" air conditioning system.

⚠ WARNING

The air conditioner system contains refrigerant under high pressure. To avoid personal injury, any air conditioner service should be done only by an experienced technician with proper equipment.

ANTENNA

ROOF MOUNTED ANTENNA

The antenna is located on the rear part of the vehicle roof.

⚠ CAUTION

- **A build up of ice on the antenna can affect radio performance. Remove the ice to restore radio reception.**
- **When removing snow from the roof, do not apply strong force to the antenna. That might break the antenna and dent the roof panel.**
- **When using a high pressure car wash, keep the high pressure nozzle away from the antenna. The seal may be deformed or damaged.**
- **The radio performance may be affected if cargo carried on the roof blocks the radio signal. If possible, do not put cargo near the antenna.**

CAR PHONE OR CB RADIO

When installing a CB, ham radio or car phone in your vehicle, be sure to observe the following precautions; otherwise, the new equipment may adversely affect the engine control system and other electronic parts.

⚠ WARNING

- **A cellular phone should not be used for any purpose while driving so full attention may be given to vehicle operation. Some jurisdictions prohibit the use of cellular phones while driving.**
- **If you must make a call while your vehicle is in motion, the hands free cellular phone operational mode is highly recommended. Exercise extreme caution at all times so full attention may be given to vehicle operation.**
- **If you are unable to devote full attention to vehicle operation while talking on the phone, pull off the road to a safe location and stop your vehicle.**

⚠ CAUTION

- **Keep the antenna as far away as possible from the electronic control modules.**
- **Keep the antenna wire more than 8 in (20 cm) away from the electronic control system harnesses. Do not route the antenna wire next to any harness.**
- **Adjust the antenna standing-wave ratio as recommended by the manufacturer.**
- **Connect the ground wire from the CB radio chassis to the body.**
- **For additional information, it is recommended that you visit a NISSAN dealer for servicing.**

"Made for iPod", "Made for iPhone" and "Made for iPad" mean that an electronic accessory has been designed to connect specifically to iPod, iPhone or iPad, respectively, and has been certified by the developer to meet Apple performance standards. Apple is not responsible for the operation of this device or its compliance with safety and regulatory standards. Please note that the use of this accessory with iPod, iPhone or iPad may affect wireless performance.

iPad, iPhone, iPod classic, iPod nano, iPod shuffle and iPod touch are trademarks of Apple Inc., registered in the U.S. and other countries. Lightning is a trademark of Apple Inc.

MEMO

5 Starting and driving

Precautions when starting and driving 273
Basic Information 273
Exhaust gas (carbon monoxide) 273
Three-way catalyst 274
Tire Pressure Monitoring System (TPMS) 274
On-pavement and off-road driving precautions 278
Avoiding collision and rollover 278
Off-road recovery 278
Rapid air pressure loss 279
Drinking alcohol/drugs and driving 280
Driving safety precautions 280
Push-button ignition switch 282
Basic Information 282
Operating range 283
Push-button ignition switch positions 283
Emergency engine shut off 284
NISSAN Intelligent Key® battery discharge 285
NISSAN Vehicle Immobilizer System 285
Before starting the engine 286
Starting the engine 286
Basic Information 286
Remote Engine Start (if so equipped) 287
Driving the vehicle 287
Engine protection mode 287
Automatic transmission (A/T) 288
Parking brake 293
Traffic Sign Recognition (TSR) (if so equipped) 293
Basic Information 293
System operation 294
Turning the Traffic Sign Recognition (TSR) system on and off 295
System temporarily unavailable 295
System malfunction 295
System maintenance 296
Lane Departure Warning (LDW) 296
Basic Information 296
LDW system operation 297
How to enable/disable the LDW system 298
LDW system limitations 299
System temporarily disabled 300
System malfunction 300
System maintenance 300
Blind Spot Warning (BSW) 301
Basic Information 301
BSW system operation 303
How to enable/disable the BSW system 303

BSW system limitations 304
BSW driving situations 305
System temporarily unavailable 308
System maintenance 309
Rear Cross Traffic Alert (RCTA) 311
Basic Information 311
RCTA system operation 311
How to enable/disable the RCTA system 313
RCTA system limitations 314
System temporarily unavailable 316
System maintenance 317
Intelligent Cruise Control (ICC) 319
Basic Information 319
How to select the cruise control mode 321
Vehicle-to-vehicle distance control mode 321
Vehicle-to-vehicle distance control mode operation 322
Vehicle-to-vehicle distance control mode switches 324
Vehicle-to-vehicle distance control mode limitations 330
System temporarily unavailable 334
System maintenance 336
Conventional (fixed speed) cruise control mode 338
Rear Automatic Braking (RAB) 342
Basic Information 342
RAB system operation 343
RAB system limitations 345
System malfunction 346
System maintenance 347
Automatic Emergency Braking (AEB) with Pedestrian Detection 347
Basic Information 347
AEB with Pedestrian Detection system operation 348
Turning the AEB with Pedestrian Detection system ON/OFF 350
AEB with Pedestrian Detection system limitations 351
System temporarily unavailable 354
System malfunction 356
System maintenance 357
Intelligent Forward Collision Warning (I-FCW) 358
Basic Information 358

I-FCW system operation 360
Turning the I-FCW system on/off 361
I-FCW system limitations 362
System temporarily unavailable 366
System malfunction 368
System maintenance 368
Intelligent Driver Alertness (I-DA) 370
Basic Information 370
Intelligent Driver Alertness system operation 370
How to enable/disable the Intelligent Driver Alertness (I-DA) system 371
Intelligent Driver Alertness (I-DA) system limitations 372
Break-in schedule 373
Fuel efficient driving tips 373
Increasing fuel economy 374
Using 4-Wheel Drive (4WD) (if so equipped) 374
Basic Information 374
Transfer case shifting procedures 375
Electronic locking rear differential (E-Lock) system (if so equipped) 382
Parking/parking on hills 383
Power steering 384
Brake system 384
Basic Information 384
Brake precautions 384
Anti-lock Braking System (ABS) 385
Active Brake Limited Slip (ABLS) system 386
Vehicle Dynamic Control (VDC) system 387
Basic Information 387
Brake force distribution 389
Hill descent control system (if so equipped) 390
Hill start assist system 390
Rear Sonar System (RSS) 391
Basic Information 391
System operation 392
How to enable/disable the RSS 393
Sonar limitations 394
System temporarily unavailable 394
System maintenance 395
Idling Stop System 395
Basic Information 395
Retrograde movement control function 398
Idling Stop System display 398
Idling Stop OFF switch 402
Cold weather driving 402
Freeing a frozen door lock 402

Antifreeze 402
Battery 402
Draining of coolant water 402
Tire equipment 403
Special winter equipment 403
Driving on snow or ice 403
Engine block heater (if so equipped) 404

PRECAUTIONS WHEN STARTING AND DRIVING

BASIC INFORMATION

⚠ WARNING

- **Do not leave children or adults who would normally require the assistance of others alone in your vehicle. Pets should also not be left alone. They could accidentally injure themselves or others through inadvertent operation of the vehicle. Also, on hot, sunny days, temperatures in a closed vehicle could quickly become high enough to cause severe or possibly fatal injuries to people or animals.**
- **Properly secure all cargo with ropes or straps to help prevent it from sliding or shifting. Do not place cargo higher than the seatbacks. In a sudden stop or collision, unsecured cargo could cause personal injury.**

EXHAUST GAS (carbon monoxide)

⚠ WARNING

- **Do not breathe exhaust gases; they contain colorless and odorless carbon monoxide. Carbon monoxide is dangerous. It can cause unconsciousness or death.**
- **If you suspect that exhaust fumes are entering the vehicle, drive with all windows fully open, and have the vehicle inspected immediately.**
- **Do not run the engine in closed spaces such as a garage.**
- **Do not park the vehicle with the engine running for any extended length of time.**
- **Keep the rear vent windows, liftgates, doors and trunk lids (if so equipped) closed while driving, otherwise exhaust gases could be drawn into the passenger compartment. If you must drive with one of these open, follow these precautions:**
  1. **Open all the windows.**
  2. **Set the air recirculation button to off and the fan control dial to high to circulate the air.**
- **If electrical wiring or other cable connections must pass to a trailer through the seal on the liftgate or the body, follow the manufacturer's recommendation to prevent carbon monoxide entry into the vehicle.**
- **The exhaust system and body should be inspected by a qualified mechanic whenever:**
  a. **The vehicle is raised for service.**
  b. **You suspect that exhaust fumes are entering into the passenger compartment.**
  c. **You notice a change in the sound of the exhaust system.**
  d. **You have had an accident involving damage to the exhaust system, underbody, or rear of the vehicle.**
- **If a special body, camper, or other equipment is added for recreational or other usage, follow the manufacturer's recommendation to prevent carbon monoxide entry into the vehicle. Do not occupy these areas while the engine is running even if the vehicle is parked. Some recreational vehicle appliances such as stoves, refrigerators, heaters, etc. may also generate carbon monoxide.**

THREE-WAY CATALYST

The three-way catalyst is an emission control device installed in the exhaust system. Exhaust gases in the three-way catalyst are burned at high temperatures to help reduce pollutants.

⚠ WARNING

- **The exhaust gas and the exhaust system are very hot. Keep people, animals or flammable materials away from the exhaust system components.**
- **Do not stop or park the vehicle over flammable materials such as dry grass, waste paper or rags. They may ignite and cause a fire.**

⚠ CAUTION

- **Do not use leaded gasoline. Deposits from leaded gasoline will seriously reduce the three-way catalyst's ability to help reduce exhaust pollutants.**
- **Keep your engine tuned up. Malfunctions in the ignition, fuel injection, or electrical systems can cause overrich fuel flow into the three-way catalyst, causing it to overheat. Do not keep driving if the engine misfires, or if noticeable loss of performance or other unusual operating conditions are detected. Have the vehicle inspected promptly. It is recommended that you visit a NISSAN dealer for this service.**
- **Avoid driving with an extremely low fuel level. Running out of fuel could cause the engine to misfire, damaging the three-way catalyst.**
- **Do not race the engine while warming it up.**
- **Do not push or tow your vehicle to start the engine.**

TIRE PRESSURE MONITORING SYSTEM (TPMS)

Basic Information

Each tire, including the spare (if provided), should be checked monthly when cold and inflated to the inflation pressure recommended by the vehicle manufacturer on the vehicle placard or tire inflation pressure label. (If your vehicle has tires of a different size than the size indicated on the vehicle placard or tire inflation pressure label, you should determine the proper tire inflation pressure for those tires.)

As an added safety feature, your vehicle has been equipped with a Tire Pressure Monitoring System (TPMS) that illuminates a low tire pressure telltale when one or more of your tires is significantly underinflated. Accordingly, when the low tire pressure telltale illuminates, you should stop and check your tires as soon as possible, and inflate them to the proper pressure. Driving on a significantly underinflated tire causes the tire to overheat and can lead to tire failure. Under-inflation also reduces fuel efficiency and tire tread life, and may affect the vehicle's handling and stopping ability.

Please note that the TPMS is not a substitute for proper tire maintenance, and it is the driver's responsibility to maintain correct tire pressure, even if under-inflation has not reached the level to trigger illumination of the TPMS low tire pressure telltale.

Your vehicle has also been equipped with a TPMS malfunction indicator to indicate when the system is not operating properly.

The TPMS malfunction indicator is combined with the low tire pressure telltale. When the system detects a malfunction, the telltale will flash for approximately one minute and then remain continuously illuminated. This sequence will continue upon subsequent vehicle start-ups as long as the malfunction exists. When the malfunction indicator is illuminated, the system may not be able to detect or signal low tire pressure as intended. TPMS malfunctions may occur for a variety of reasons, including the installation of replacement or alternate tires or wheels on the vehicle that prevent the TPMS from functioning properly. Always check the TPMS malfunction telltale after replacing one or more tires or wheels on your vehicle to ensure that the replacement or alternate tires and wheels allow the TPMS to continue to function properly.

Additional information:

- When using a wheel without the TPMS such as a spare tire, the TPMS does not monitor the tire pressure of the spare tire.
- The TPMS will activate only when the vehicle is driven at speeds above 16 mph (25 km/h). Also, this system may not detect a sudden drop in tire pressure (for example, a flat tire while driving).
- The low tire pressure warning light does not automatically turn off when the tire pressure of your tires are adjusted. After the tires are inflated to the recommended pressure, the vehicle must be driven at speeds above 16 mph (25 km/h) to activate the TPMS and turn off the low tire pressure warning light. Use a tire pressure gauge to check the tire pressure.
- The "Tire Pressure Low — Add Air" warning appears in the vehicle information display when the low tire pressure warning light is illuminated and low tire pressure is detected. The "Tire Pressure Low — Add Air" warning turns off when the low tire pressure warning light turns off.
- The "Tire Pressure Low — Add Air" warning appears each time the ignition switch is placed in the ON position as long as the low tire pressure warning light remains illuminated.
- The "Tire Pressure Low — Add Air" warning does not appear if the low tire pressure warning light illuminates to indicate a TPMS malfunction.
- Tire pressure rises and falls depending on the heat caused by the vehicle's operation and the outside temperature. Do not reduce the tire pressure after driving because the tire pressure rises after driving. Low outside temperature can lower the temperature of the air inside the tire which can cause a lower tire inflation pressure. This may cause the low tire pressure warning light to illuminate. If the warning light illuminates, check the tire pressure for all four tires.
- The Tire and Loading information label is located in the driver's door opening.

For additional information, see "Low tire pressure warning light" (P. 119) and "Tire Pressure Monitoring System (TPMS)" (P. 407).

⚠ WARNING

- **Radio waves could adversely affect electric medical equipment. Those who use a pacemaker should contact the electric medical equipment manufacturer for the possible influences before use.**

- **If the low tire pressure warning light illuminates while driving, avoid sudden steering maneuvers or abrupt braking, reduce vehicle speed, pull off the road to a safe location and stop the vehicle as soon as possible. Driving with under-inflated tires may permanently damage the tires and increase the likelihood of tire failure. Serious vehicle damage could occur and may lead to an accident and could result in serious personal injury. Check the tire pressure for all four tires. Adjust the tire pressure to the recommended COLD tire pressure shown on the Tire and Loading information label to turn the low tire pressure warning light off. If you have a flat tire, replace it with a spare tire as soon as possible. For additional information, see "Flat tire" (P. 407) for changing a flat tire.**
- **When using a wheel without the TPMS such as a spare tire, when a spare tire is mounted or a wheel is replaced, the TPMS will not function and the low tire pressure warning light will flash for approximately 1 minute. The light will remain on after 1 minute. Have your tires replaced and/or TPMS system reset as soon as possible. It is recommended that you visit a NISSAN dealer for this service.**
- **Replacing tires with those not originally specified by NISSAN could affect the proper operation of the TPMS.**
- **Do not inject any tire liquid or aerosol tire sealant into the tires, as this may cause a malfunction of the tire pressure sensors.**
- **To help avoid serious personal injury or death, when checking your tire pressure, either as part of routine maintenance or because of a TPMS alert, please check the pressure in all of your tires. Driving on underinflated tires can cause tire failure and interfere with the proper operation of other vehicle systems.**

⚠ CAUTION

Do not place metalized film or any metal parts (antenna, etc.) on the windows. This may cause poor reception of the signals from the tire pressure sensors, and the TPMS will not function properly.

Some devices and transmitters may temporarily interfere with the operation of the TPMS and cause the low tire pressure warning light to illuminate.

Some examples are:

- Facilities or electric devices using similar radio frequencies are near the vehicle.
- If a transmitter set to similar frequencies is being used in or near the vehicle.
- If a computer (or similar equipment) or a DC/AC converter is being used in or near the vehicle.

The low tire pressure warning light may illuminate in the following cases:

- If the vehicle is equipped with a wheel and tire without TPMS.
- If the TPMS has been replaced and the ID has not been registered.
- If the wheel is not originally specified by NISSAN.

FCC Notice:

For USA:

This device complies with Part 15 of the FCC Rules. Operation is subject to the following two conditions: (1) This device may not cause harmful interference, and (2) this device must accept any interference received, including interference that may cause undesired operation.

NOTE:

Changes or modifications not expressly approved by the party responsible for compliance could void the user's authority to operate the equipment.

For Canada:

This device contains license-exempt transmitter(s)/receiver(s) that comply with Innovation, Science and Economic Development Canada's licence-exempt RSS(s). Operation is subject to the following two conditions: (1) This device may not cause interference. (2) This device must accept any interference, including interference that may cause undesired operation of the device.

TPMS with Easy-Fill Tire Alert

⚠WARNING

After rotating the tires, do not use the Easy-Fill Tire Alert to adjust the tire pressure. Instead use a gauge to adjust the tires to the correct pressure in accordance with Tire and Loading information label.

When adding air to an under-inflated tire, the TPMS with Easy-Fill Tire Alert provides visual and audible signals outside the vehicle to help you inflate the tires to the recommended COLD tire pressure.

Vehicle set-up

1. Park the vehicle in a safe and level place.
2. Apply the parking brake and place the shift lever in the P (Park) position.
3. Place the ignition switch in the ON position. Do not start the engine.

Operation

1. Add air to the tire.
2. After a few seconds, the hazard indicators will start flashing.
3. When the designated pressure is reached, the horn beeps once and the hazard indicators stop flashing.
4. Perform the above steps for each tire.
   - If the tire is over-inflated more than approximately 4 psi (30 kPa), the horn beeps and the hazard indicators flash three times. To correct the pressure, push the core of the valve stem on the tire briefly to release pressure. When the pressure reaches the designated pressure, the horn beeps once.
   - If the hazard indicator does not flash within approximately 15 seconds after starting to inflate the tire, it indicates that the Easy-Fill Tire Alert is not operating.
   - The TPMS will not activate the Easy-Fill Tire Alert under the following conditions:
     - If there is interference from an external device or transmitter.
     - The air pressure from the inflation device is not sufficient to inflate the tire.
     - There is a malfunction in the TPMS.
     - There is a malfunction in the horn or hazard indicators.

- The identification code of the tire pressure sensor is not registered to the system.
- The battery of the tire pressure sensor is low.

- If the Easy-Fill Tire Alert does not operate due to TPMS interference, move the vehicle about 3 ft (1 m) backward or forward and try again.

If the Easy-Fill Tire Alert is not working, use a tire pressure gauge.

ON-PAVEMENT AND OFF-ROAD DRIVING PRECAUTIONS

Utility vehicles have a significantly higher rollover rate than other types of vehicles.

They have higher ground clearance than passenger cars to make them capable of performing in a variety of on-pavement and off-road applications. This gives them a higher center of gravity than ordinary vehicles. An advantage of higher ground clearance is a better view of the road, allowing you to anticipate problems. However, they are not designed for cornering at the same speeds as conventional 2-Wheel Drive vehicles any more than low-slung sports cars are designed to perform satisfactorily under off-road conditions. If at all possible, avoid sharp turns at high speeds. As with other vehicles of this type, failure to operate this vehicle correctly may result in loss of control or vehicle rollover.

In a rollover crash, an unbelted person is significantly more likely to die than a person wearing a seat belt.

For additional information, see "Driving safety precautions" (P. 280).

AVOIDING COLLISION AND ROLLOVER

⚠WARNING

Failure to operate this vehicle in a safe and prudent manner may result in loss of control or an accident.

Be alert and drive defensively at all times. Obey all traffic regulations. Avoid excessive speed, high speed cornering, or sudden steering maneuvers, because these driving practices could cause you to lose control of your vehicle.

As with any vehicle, loss of control could result in a collision with other vehicles or objects or cause the vehicle to roll over, particularly if the loss of control causes the vehicle to slide sideways.

Be attentive at all times, and avoid driving when tired. Never drive when under the influence of alcohol or drugs (including prescription or over-the-counter drugs which may cause drowsiness). Always wear your seat belt as outlined in the "Safety – Seats, seat belts and supplemental restraint system" section of this manual, and also instruct your passengers to do so.

Seat belts help reduce the risk of injury in collisions and rollovers.

In a rollover crash, an unbelted person is significantly more likely to die than a person wearing a seat belt.

OFF-ROAD RECOVERY

While driving, the right side or left side wheels may unintentionally leave the road surface. If this occurs, maintain control of the vehicle by following the procedure below. Please note that this procedure is only a general guide. The vehicle must be driven as appropriate based on the conditions of the vehicle, road and traffic.

1. Remain calm and do not overreact.
2. Do not apply the brakes.
3. Maintain a firm grip on the steering wheel with both hands and try to hold a straight course.

4. When appropriate, slowly release the accelerator pedal to gradually slow the vehicle.
5. If there is nothing in the way, steer the vehicle to follow the road while vehicle speed is reduced. Do not attempt to drive the vehicle back onto the road surface until vehicle speed is reduced.
6. When it is safe to do so, gradually turn the steering wheel until both tires return to the road surface. When all tires are on the road surface, steer the vehicle to stay in the appropriate driving lane.
   - If you decide that it is not safe to return the vehicle to the road surface based on vehicle, road or traffic conditions, gradually slow the vehicle to a stop in a safe place off the road.

RAPID AIR PRESSURE LOSS

Rapid air pressure loss or a "blow-out" can occur if the tire is punctured or is damaged due to hitting a curb or pothole. Rapid air pressure loss can also be caused by driving on under-inflated tires.

Rapid air pressure loss can affect the handling and stability of the vehicle, especially at highway speeds.

Help prevent rapid air pressure loss by maintaining the correct air pressure and visually inspecting the tires for wear and damage. For additional information, see "Wheels and tires" (P. 461). If a tire rapidly loses air pressure or "blows-out" while driving, maintain control of the vehicle by following the procedure below. Please note that this procedure is only a general guide. The vehicle must be driven as appropriate based on the conditions of the vehicle, road and traffic.

⚠WARNING

The following actions can increase the chance of losing control of the vehicle if there is a sudden loss of tire air pressure. Losing control of the vehicle may cause a collision and result in personal injury.

- **The vehicle generally moves or pulls in the direction of the flat tire.**
- **Do not rapidly apply the brakes.**
- **Do not rapidly release the accelerator pedal.**
- **Do not rapidly turn the steering wheel.**

1. Remain calm and do not overreact.
2. Maintain a firm grip on the steering wheel with both hands and try to hold a straight course.
3. When appropriate, slowly release the accelerator pedal to gradually slow the vehicle.
4. Gradually steer the vehicle to a safe location off the road and away from traffic if possible.
5. Lightly apply the brake pedal to gradually stop the vehicle.
6. Turn on the hazard warning flashers and contact a roadside emergency service to change the tire. For additional information, see "Changing a flat tire" (P. 408).

DRINKING ALCOHOL/DRUGS AND DRIVING

⚠WARNING

Never drive under the influence of alcohol or drugs. Alcohol in the bloodstream reduces coordination, delays reaction time and impairs judgement. Driving after drinking alcohol increases the likelihood of being involved in an accident injuring yourself and others. Additionally, if you are injured in an accident, alcohol can increase the severity of the injury.

NISSAN is committed to safe driving. However, you must choose not to drive under the influence of alcohol. Every year thousands of people are injured or killed in alcohol-related collisions. Although the local laws vary on what is considered to be legally intoxicated, the fact is that alcohol affects all people differently and most people underestimate the effects of alcohol.

Remember, drinking and driving don't mix! That is true for drugs (over-the-counter, prescription) and illegal drugs, too. Don't drive if your ability to operate your vehicle is impaired by alcohol, drugs, or some other physical condition.

DRIVING SAFETY PRECAUTIONS

Your NISSAN is designed for both normal and off-road use. However, avoid driving in deep water or mud as your NISSAN is mainly designed for leisure use, unlike a conventional off-road vehicle.

Remember that 2-Wheel Drive models are less capable than 4-Wheel Drive (4WD) models for rough road driving and extrication when stuck in deep snow or mud, or the like.

Please observe the following precautions:

⚠WARNING

- **Drive carefully when off the road and avoid dangerous areas. Every person who drives or rides in this vehicle should be seated with their seat belt fastened. This will keep you and your passengers in position when driving over rough terrain.**
- **Do not drive across steep slopes. Instead drive either straight up or straight down the slopes. Off-road vehicles can tip over sideways much more easily than they can forward or backward.**
- **Many hills are too steep for any vehicle. If you drive up them, you may stall. If you drive down them, you may not be able to control your speed. If you drive across them, you may roll over.**
- **Do not shift gears while driving on downhill grades as this could cause loss of control of the vehicle.**
- **Stay alert when driving to the top of a hill. At the top there could be a drop-off or other hazard that could cause an accident.**
- **If your engine stalls or you cannot make it to the top of a steep hill, never attempt to turn around. Your vehicle could tip or roll over. Always back straight down in R (Reverse) gear. Never back down in N (Neutral), using only the brake, as this could cause loss of control.**

- **Heavy braking going down a hill could cause your brakes to overheat and fade, resulting in loss of control and an accident. Apply brakes lightly and use a low gear to control your speed.**
- **Unsecured cargo can be thrown around when driving over rough terrain. Properly secure all cargo so it will not be thrown forward and cause injury to you or your passengers.**
- **To avoid raising the center of gravity excessively, do not exceed the rated capacity of the roof rack (if so equipped) and evenly distribute the load. Secure heavy loads in the cargo area as far forward and as low as possible. Do not equip the vehicle with tires larger than specified in this manual. This could cause your vehicle to roll over.**
- **Do not grip the inside or spokes of the steering wheel when driving off-road. The steering wheel could move suddenly and injure your hands. Instead drive with your fingers and thumbs on the outside of the rim.**
- **Before operating the vehicle, ensure that the driver and all passengers have their seat belts fastened.**
- **Always drive with the floor mats (if so equipped) in place as the floor may become hot.**
- **Lower your speed when encountering strong crosswinds. With a higher center of gravity, your NISSAN is more affected by strong side winds. Slower speeds ensure better vehicle control.**
- **Do not drive beyond the performance capability of the tires, even with 4WD engaged (if so equipped).**
- **For 4WD equipped vehicles, do not attempt to raise two wheels off the ground and shift the transmission to any drive or reverse position with the engine running. Doing so may result in drivetrain damage or unexpected vehicle movement which could result in serious vehicle damage or personal injury.**
- **Do not attempt to test a 4WD equipped vehicle on a 2-wheel dynamometer (such as the dynamometers used by some states for emissions testing), or similar equipment even if the other two wheels are raised off the ground. Make sure you inform test facility personnel that your vehicle is equipped with 4WD before it is placed on a dynamometer. Using the wrong test equipment may result in drivetrain damage or unexpected vehicle movement which could result in serious vehicle damage or personal injury.**
- **Accelerating quickly, sharp steering maneuvers or sudden braking may cause loss of control.**
- **If at all possible, avoid sharp turning maneuvers, particularly at high speeds. Your NISSAN 4WD vehicle has a higher center of gravity than a passenger car. The vehicle is not designed for cornering at the same speeds as passenger cars. Failure to operate this vehicle correctly could result in loss of control and/or a rollover accident.**
- **Always use tires of the same type, size, brand, construction (bias, bias-belted, or radial), and tread pattern on all four wheels. Install tire chains on the rear wheels when driving on slippery roads and drive carefully.**
- **Be sure to check the brakes immediately after driving in mud or water. For additional information, see "Wet brakes" (P. 385).**

- **Avoid parking your vehicle on steep hills. If you get out of the vehicle and it rolls forward, backward or sideways, you could be injured.**
- **Whenever you drive off-road through sand, mud or water as deep as the wheel hub, more frequent maintenance may be required. For additional information, see "Additional maintenance items for severe operating conditions" (P. 481).**

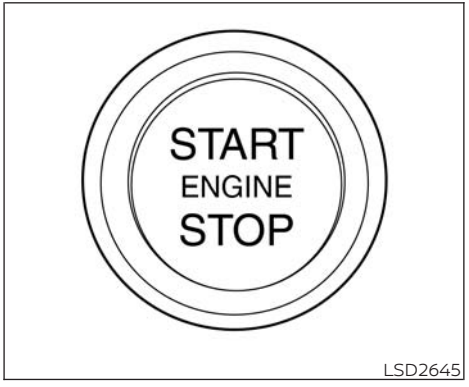

BASIC INFORMATION

WARNING

Do not operate the push-button ignition switch while driving the vehicle except in an emergency. (The engine will stop when the ignition switch is pushed three consecutive times in quick succession or the ignition switch is pushed and held for more than 2 seconds.) If the engine stops while the vehicle is being driven, this could lead to a crash and serious injury.

When the ignition switch is pushed without depressing the brake pedal, the ignition switch position will illuminate as follows:

Push center:

- Once to change to ACC.
- Two times to change to ON.
- Three times to return to OFF.

The ignition switch will automatically return to the LOCK position when any door is either opened or closed with the switch in the OFF position.

When the ignition switch cannot be placed in the OFF position, proceed as follows:

1. Move the shift lever to the P (Park) position.
2. Push the ignition switch. The ignition switch position will change to the ON position.
3. Push the ignition switch again to the OFF position.

The shift lever can be moved from the P (Park) position if the ignition switch is in the ON position and the brake pedal is depressed.

If the battery of the vehicle is discharged, the ignition switch cannot be moved from the LOCK position.

Some indicators and warnings for operation are displayed in the meter. For additional information, see "Warning lights, indicator lights and audible reminders" (P. 114).

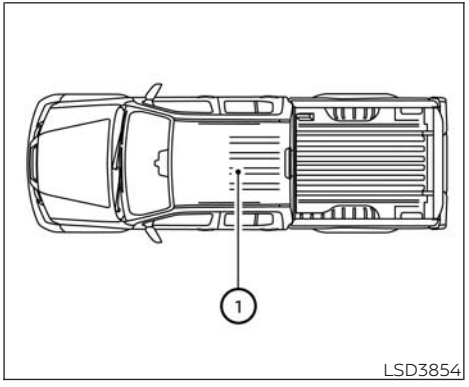

OPERATING RANGE

The Intelligent Key functions can only be used when the Intelligent Key is within the specified operating range.

When the Intelligent Key battery is almost discharged or strong radio waves are present near the operating location, the Intelligent Key system's operating range becomes narrower and may not function properly.

If the Intelligent Key is within the operating range, it is possible for anyone, even someone who does not carry the Intelligent Key, to push the ignition switch to start the engine.

The operating range of the engine start function is inside of the vehicle ①.

- The luggage area is not included in the operating range, but the Intelligent Key may function.
- If the Intelligent Key is placed on the instrument panel or inside the glove box, storage bin or door pocket, the Intelligent Key may not function.
- If the Intelligent Key is placed near the door or window outside the vehicle, the Intelligent Key may function.

PUSH-BUTTON IGNITION SWITCH POSITIONS

LOCK (Normal parking position)

The ignition switch can only be locked in this position.

The ignition switch will be unlocked when it is pushed to the ON position while carrying the Intelligent Key.

The ignition switch will lock when any door is opened or closed with the ignition switched off.

ACC (Accessories)

This position activates electrical accessories, such as the radio, when the engine is not running.

ACC has a battery saver feature that will place the ignition switch in the OFF position after a period of time under the following conditions:

- All doors are closed.
- The shift lever is in P (Park).
- The hazard lamps are off.
- The turn signals are off.

The battery saver feature will be canceled if any of the following occur:

- Any door is opened.
- The shift lever is moved out of the P (Park) position.
- The ignition switch changes position.
- The hazard lamps are turned on.

ON (Normal operating position)

This position turns on the ignition system and electrical accessories.

ON has a battery saver feature that will place the ignition switch in the OFF position, if the vehicle is not running, after some time under the following conditions:

- All doors are closed.
- The shift lever is in P (Park).
- The hazard lamps are off.
- The turn signals are off.

The battery saver feature will be canceled if any of the following occur:

- Any door is opened.
- The shift lever is moved out of the P (Park) position.
- The ignition switch changes position.
- The hazard lamps are turned on.
- The turn signals are turned on.

⚠ CAUTION

Do not leave the vehicle with the ignition switch in the ACC or ON position when the engine is not running for an extended period. This can discharge the battery.

OFF

The ignition switch is in the OFF position when the engine is turned off using the ignition switch.

EMERGENCY ENGINE SHUT OFF

To shut off the engine in an emergency situation while driving, perform the following procedure:

- Rapidly push the ignition switch three consecutive times in less than 1.5 seconds, or
- Push and hold the ignition switch for more than 2 seconds.

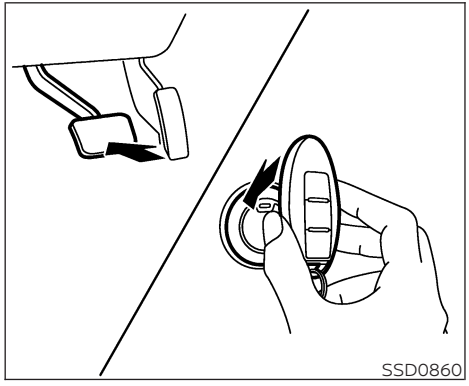

NISSAN INTELLIGENT KEY® BATTERY DISCHARGE

If the battery of the NISSAN Intelligent Key® is discharged, or environmental conditions interfere with the Intelligent Key operation, start the engine according to the following procedure:

1. Place the shift lever in the P (Park) position.
2. Firmly apply the foot brake.
3. Touch the ignition switch with the Intelligent Key as illustrated. (A chime will sound.)

   After step 3 is performed, when the ignition switch is pushed without depressing the brake pedal, the ignition switch position will change to the ON position.
4. Push the ignition switch while depressing the brake pedal within 10 seconds after the chime sounds. The engine will start.

NOTE:

- **When the ignition switch is pushed to the ON position or the engine is started by the above procedure, the Intelligent Key battery discharge indicator appears in the vehicle information display even when the Intelligent Key is inside the vehicle. This is not a malfunction. To turn off the Intelligent Key battery discharge indicator, touch the ignition switch with the Intelligent Key again.**
- **If the Intelligent Key battery discharge indicator appears, replace the battery as soon as possible. For additional information, see "Intelligent Key battery replacement" (P. 454).**

NISSAN VEHICLE IMMOBILIZER SYSTEM

The NISSAN Vehicle Immobilizer System will not allow the engine to start without the use of the registered key.

If the engine fails to start using a registered key (for example, when interference is caused by another registered key, an automated toll road device or automatic payment device on the key ring), restart the engine using the following procedures:

1. Leave the ignition switch in the ON position for approximately 5 seconds.
2. Place the ignition switch in the OFF or LOCK position, and wait approximately 10 seconds.
3. Repeat steps 1 and 2.
4. Restart the engine while holding the device (which may have caused the interference) separate from the registered key.

If the no start condition re-occurs, NISSAN recommends placing the registered key on a separate key ring to avoid interference from other devices.

- Make sure the area around the vehicle is clear.
- Check fluid levels such as engine oil, coolant, brake, and windshield-washer fluid as frequently as possible, or at least whenever you refuel.
- Check that all windows and lights are clean.
- Visually inspect tires for their appearance and condition. Also check tires for proper inflation.
- Check that all doors are closed.
- Position seat and adjust head restraints/headrests.
- Adjust inside and outside mirrors.
- Fasten the seat belt and ask all passengers to do likewise.
- Check the operation of warning lights when the ignition switch is placed in the ON position. For additional information, see "Warning lights, indicator lights and audible reminders" (P. 114).

BASIC INFORMATION

1. Apply the parking brake.
2. Move the shift lever to P (Park) or N (Neutral). P (Park) is recommended. **The starter is designed not to operate unless the shift lever is in either P (Park) or N (Neutral).**
3. Push the ignition switch to the ON position. Depress the brake pedal and push the ignition switch to start the engine.

   To start the engine immediately, push and release the ignition switch while depressing the brake pedal with the ignition switch in any position.

- If the engine is very hard to start in extremely cold weather or when restarting, depress the accelerator pedal a little (approximately 1/3 to the floor) and while holding, crank the engine. Release the accelerator pedal when the engine starts.
- If the engine is very hard to start because it is flooded, depress the accelerator pedal all the way to the floor and hold it. Push the ignition switch to the ON position to start cranking the engine. After 5 or 6 seconds, stop cranking by pushing the ignition switch to the LOCK position. After cranking the engine, release the accelerator pedal. Crank the engine with your foot off the accelerator pedal by depressing the brake pedal and pushing the ignition switch to start the engine. If the engine starts, but fails to run, repeat the above procedure.

⚠ CAUTION

Do not operate the starter for more than 15 seconds at a time. If the engine does not start, push the ignition switch to the OFF position and wait 10 seconds before cranking again, otherwise the starter could be damaged.

4. **Warm-up**

   Allow the engine to idle for at least 30 seconds after starting. Do not race the engine while warming it up. Drive at a moderate speed for a short distance first, especially in cold weather. In cold weather, keep the engine running for a minimum of 2 to 3 minutes before shutting it off. Starting and stopping the engine over a short period of time may make the vehicle more difficult to start.
5. To stop the engine, move the shift lever to the P (Park) position and push the ignition switch to the OFF position.

In preparation for the next engine start, the engine may have a slightly delayed shutoff after placing the ignition switch in the OFF position, depending on the driving conditions.

NOTE:

The engine would NOT start within 3 seconds of turning the engine off.

NOTE:

Care should be taken to avoid situations that can lead to potential battery discharge and potential no-start conditions such as:

1. **Installation or extended use of electronic accessories that consume battery power when the engine is not running (phone chargers, GPS, DVD players, etc.).**
2. **The vehicle is not driven regularly and/or only driven short distances.**

In these cases, the battery may need to be charged to maintain battery health.

REMOTE ENGINE START (if so equipped)

Vehicles started with the Remote Engine Start require the ignition switch to be placed in the ON position before the shift lever can be moved from the P (Park) position. To place the ignition switch in the ON position, follow these steps:

1. Make sure that the Intelligent Key is on you.
2. Apply the brake.
3. Push the ignition switch once to the ON position.

For additional information, see "NISSAN Intelligent Key®" (P. 194).

ENGINE PROTECTION MODE

The engine has an engine protection mode to reduce the chance of damage if the coolant temperature becomes too high (for example, when climbing steep grades in high temperatures with heavy loads, such as when towing a trailer). When the engine temperature reaches a certain level:

- The engine coolant temperature gauge will move toward the H position.
- Engine power may be reduced.
- The air conditioning cooling function may be automatically turned off for a short time (the blower will continue to operate).

Engine power and, under some conditions, vehicle speed will decrease. Vehicle speed can be controlled with the accelerator pedal, but the vehicle may not accelerate at the desired speed. The transmission will downshift or upshift as it reaches prescribed shift points. You can also shift manually.

As driving conditions change and engine coolant temperature is reduced, vehicle speed can be increased using the accelerator pedal, and the air conditioning cooling function will automatically be turned back on.

The Malfunction Indicator Light (MIL) may also come on if the engine coolant temperature is not reduced or the air conditioning cooling function does not turn back on. If **only** it remains on, you do not need to have your vehicle towed, but have it inspected soon. It is recommended that you visit a NISSAN dealer for this service. For additional information, see "Malfunction Indicator Light (MIL)" (P. 121).

⚠ WARNING

Overheating can result in reduced engine power and vehicle speed. The reduced speed may be lower than other traffic, which could increase the chance of a collision. Be especially careful when driving. If the vehicle cannot maintain a safe driving speed, pull to the side of the road in a safe area. Allow the engine to cool and return to normal operation. For additional information, see "If your vehicle overheats" (P. 417).

⚠ CAUTION

Running the engine with the engine oil pressure warning light on could cause serious damage to the engine almost immediately. Such damage is not covered by warranty. Turn off the engine as soon as it is safe to do so.

AUTOMATIC TRANSMISSION (A/T)

Basic Information

⚠ WARNING

- **Do not depress the accelerator pedal while shifting from P (Park) or N (Neutral) to R (Reverse), D (Drive). Always depress the brake pedal until shifting is completed. Failure to do so could cause you to lose control and have an accident.**
- **Cold engine idle speed is high, so use caution when shifting into a forward or reverse gear before the engine has warmed up.**
- **Never shift to either the P (Park) or R (Reverse) position while the vehicle is moving forward and P (Park) or D (Drive) position while the vehicle is reversing. This could cause an accident or damage the transmission.**
- **Do not downshift abruptly on slippery roads. This may cause a loss of control.**
- **Except in an emergency, do not shift to the N (Neutral) position while driving. Coasting with the transmission in the N (Neutral) position may cause serious damage to the transmission.**

⚠ CAUTION

- **To avoid possible damage to your vehicle, when stopping the vehicle on an uphill grade, do not hold the vehicle by depressing the accelerator pedal. The foot brake should be used for this purpose.**

The A/T in your vehicle is electronically controlled to produce maximum power and smooth operation.

The recommended operating procedures for this transmission are shown on the following pages. Follow these procedures for maximum vehicle performance and driving enjoyment.

Starting the vehicle

1. After starting the engine, fully depress the foot brake pedal before moving the shift lever out of the P (Park) position.
2. Keep the foot brake pedal depressed and move the shift lever into a driving gear.
3. Release the foot brake, then gradually start the vehicle in motion.

The automatic transmission is designed so the foot brake pedal MUST be depressed before shifting from P (Park) to any drive position while the ignition switch is in the ON position.

The shift lever cannot be moved out of the P (Park) position and into any of the other gear positions if the ignition switch is placed in the ACC, LOCK or OFF position.

The shift lever may not be moved out of the P (Park) position and into any of the other gear positions if the ignition switch is placed in the ON position, but the engine is not running and the outside temperature is extremely low.

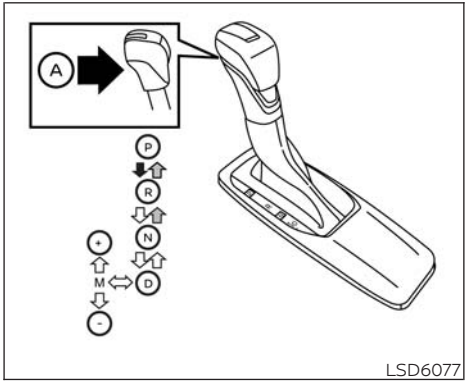

Shifting

Basic Information

To move the shift lever:

➡ Press the button Ⓐ while depressing the brake pedal

➡ Press the button Ⓐ to shift

⇨ Shift without depressing the brake pedal

Shifting

After starting the engine, fully depress the brake pedal and move the shift lever out of the P (Park) position.

⚠ WARNING

Apply the parking brake if the shift lever is in any position while the engine is not running. Failure to do so could cause the vehicle to move unexpectedly or roll away and result in serious personal injury or property damage.

If the ignition switch is placed in the OFF position for any reason while the vehicle is in N (Neutral), or any D (Drive) position, the ignition switch cannot be placed in the LOCK position. Move the shift lever to the P (Park) position, then the ignition switch can be placed in the LOCK position.

P (Park)

⚠ CAUTION

To prevent transmission damage, use the P (Park) position only when the vehicle is completely stopped.

Use the P (Park) shift lever position when the vehicle is parked or when starting the engine. Make sure the vehicle is completely stopped.

The brake pedal should be depressed to move the shift lever from N (Neutral) or any drive position to P (Park).

Apply the parking brake. When parking on a hill, apply the parking brake first, then move the shift lever into the P (Park) position.

R (Reverse)

⚠ CAUTION

To prevent transmission damage, use the R (Reverse) position only when the vehicle is completely stopped.

Use the R (Reverse) position to back up. Make sure the vehicle is completely stopped before selecting the R (Reverse) position. **The brake pedal must be depressed to move the shift lever from P (Park), N (Neutral) or any drive position to R (Reverse).**

N (Neutral)

Neither forward nor reverse gear is engaged. The engine can be started in this position. You may shift to N (Neutral) and restart a stalled engine while the vehicle is moving.

D (Drive)

Use this position for all normal forward driving.

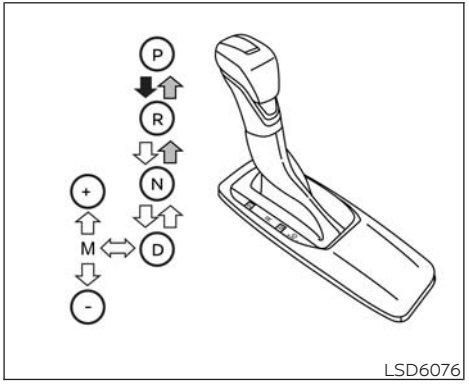

Manual shift mode

Basic Information

Move the shift lever sideways toward the manual shift gate to activate the manual shift mode, then select "+" or "-" to shift up or down. Shift ranges can be selected manually.

In the manual shift mode, the shift range is displayed on the position indicator in the meter. After moving the shift lever to the manual shift gate, the position indicator varies depending on the gear position and vehicle speed.

- **In the manual shift mode, the transmission may not shift to the selected gear immediately because of vehicle speed. The transmission will upshift or downshift when vehicle speed matches the programmed transmission shift points. This helps maintain driving performance and reduces the chance of vehicle damage or loss of control.**
- **In the manual shift mode, the transmission will not upshift to a higher gear than is manually selected. When the vehicle speed decreases, the transmission automatically shifts down and shifts to 1st gear before the vehicle comes to a stop.**

Shift ranges up or down one by one as follows:

M1 ↔ M2 ↔ M3 ↔ M4 ↔ M5 ↔ M6 ↔ M7 ↔ M8 ↔ M9 ↔ D

M9 (Ninth)

Use this position for all normal forward driving at highway speeds.

M1 ↔ M2 ↔ M3 ↔ M4 ↔ M5 ↔ M6 ↔ M7 ↔ M8 ↔ M9

M9 will be displayed on the position indicator in the meter.

M8 (Eighth)

Use this position for all normal forward driving at highway speeds.

M1 ↔ M2 ↔ M3 ↔ M4 ↔ M5 ↔ M6 ↔ M7 ↔ M8

M8 will be displayed on the position indicator in the meter.

M7 (Seventh)

Use this position for all normal forward driving at highway speeds.

M1 ↔ M2 ↔ M3 ↔ M4 ↔ M5 ↔ M6 ↔ M7

M7 will be displayed on the position indicator in the meter.

M6 (Sixth)

Use this position for all normal forward driving at highway speeds.

M1 ↔ M2 ↔ M3 ↔ M4 ↔ M5 ↔ M6

M6 will be displayed on the position indicator in the meter

M5 (Fifth)

For driving up or down long slopes where engine braking would be advantageous.

Shift ranges up or down one by one as follows:

M1 ↔ M2 ↔ M3 ↔ M4 ↔ M5

M5 will be displayed on the position indicator in the meter.

M4 (Fourth)

Use for hill climbing or engine braking on downhill grades.

Shift ranges up or down one by one as follows:

M1 ↔ M2 ↔ M3 ↔ M4

M4 will be displayed on the position indicator in the meter.

M3 (Third)

Use for hill climbing or engine braking on downhill grades.

Shift ranges up or down one by one as follows:

M1 ↔ M2 ↔ M3

M3 will be displayed on the position indicator in the meter.

M2 (Second)

Use for hill climbing or engine braking on downhill grades.

Shift ranges up or down one by one as follows:

M1 ↔ M2

M2 will be displayed on the position indicator in the meter.

M1 (First)

Use this position when climbing steep hills slowly or driving slowly through deep snow, sand or mud, or for maximum engine braking on steep downhill grades.

M1 will be displayed on the position indicator on the meter.

- Remember not to drive at high speeds for extended periods of time in lower than M4 range. This reduces fuel economy.

When shifting up

Move the shift lever to the + (up) side. (Shifts to higher range.)

When shifting down

Move the shift lever to the – (down) side. (Shifts to lower range.)

- The transmission will automatically downshift the gears. (For example, if you select the 3rd range, the transmission will shift down between the 3rd and 1st gears.)
- Moving the shift lever rapidly to the same side twice will shift the ranges in succession.

When canceling the manual shift mode

Return the shift lever to the D (Drive) position to return the transmission to the normal driving mode.

Accelerator downshift — in D (Drive) position —

For passing or hill climbing, depress the accelerator pedal to the floor. This shifts the transmission down into a lower gear, depending on the vehicle speed.

High fluid temperature protection mode

This transmission has a high fluid temperature protection mode. If the fluid temperature becomes too high (for example, when climbing steep grades in high temperatures with heavy loads, such as when towing a trailer), engine power and, under some conditions, vehicle speed will be decreased automatically to reduce the chance of transmission damage. Vehicle speed can be controlled with the accelerator pedal, but the engine and vehicle speed may be limited.

Fail-safe

If the vehicle is driven under extreme conditions, such as excessive wheel spinning and subsequent hard braking, the fail-safe system may be activated. The Malfunction Indicator Light (MIL) may come on to indicate the fail-safe mode is activated. For additional information, see "Malfunction Indicator Light (MIL)" (P. 121). This will occur even if all electrical circuits are functioning properly. In this case, place the ignition switch in the OFF position and wait for 10 seconds. Then push the switch back to the ON position. The vehicle should return to its normal operating condition. If it does not return to its normal operating condition, have the transmission checked and repaired, if necessary. It is recommended that you visit a NISSAN dealer for this service.

⚠ WARNING

When the high fluid temperature protection mode or fail-safe operation occurs, vehicle speed may be gradually reduced. The reduced speed may be lower than other traffic, which could increase the chance of a collision. Be especially careful when driving. If necessary, pull to the side of the road at a safe place and allow the transmission to return to normal operation, or have it repaired if necessary.

⚠ WARNING

- **Be sure the parking brake is fully released before driving. Failure to do so can cause brake failure and lead to an accident.**
- **Do not release the parking brake from outside the vehicle.**
- **Do not use the shift lever in place of the parking brake. When parking, be sure the parking brake is fully engaged.**
- **To help avoid risk of injury or death through unintended operation of the vehicle and/or its systems, do not leave children, people who require the assistance of others or pets unattended in your vehicle. Additionally, the temperature inside a closed vehicle on a warm day can quickly become high enough to cause a significant risk of injury or death to people and pets.**

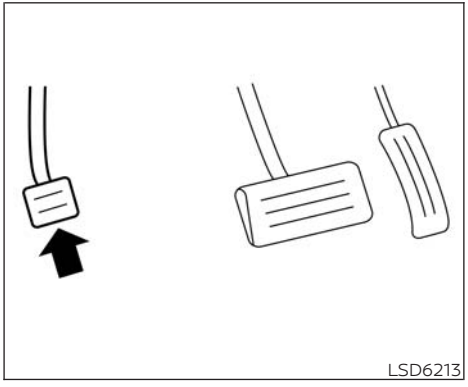
LSD6213

To engage: Firmly depress the parking brake.

To release:

1. Firmly apply the foot brake.
2. Move the shift lever to the P (Park) position.
3. Firmly depress the parking brake pedal and it will release.
4. Before driving, be sure the brake warning light goes out.

TRAFFIC SIGN RECOGNITION (TSR) (if so equipped)

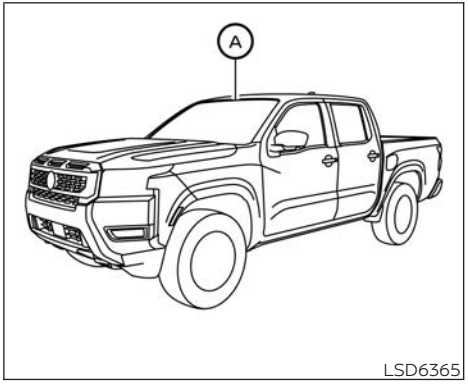

LSD6365

BASIC INFORMATION

The TSR system provides the driver with information about the most recently detected speed limit. The system captures the road sign information with the multi-sensing front camera unit Ⓐ located on the windshield in front of the inside rear-view mirror and displays the detected signs in the vehicle information display. For vehicles equipped with a navigation system, the speed limit displayed is based on a combination of navigation system data and live camera recognition. TSR information is always displayed at the top of the

vehicle information display, and optionally in the main central area of the display screen.

⚠ WARNING

The TSR system is only intended to be a support device to help provide the driver with information. It is not a replacement for the driver's attention to traffic conditions or responsibility to drive safely. It cannot prevent accidents due to carelessness. It is the driver's responsibility to stay alert and drive safely at all times.

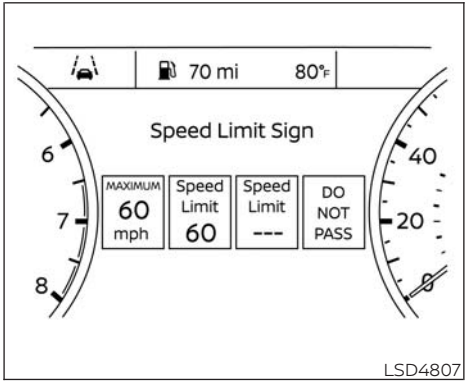

SYSTEM OPERATION

The Traffic Sign Recognition (TSR) system displays the following types of road signs:

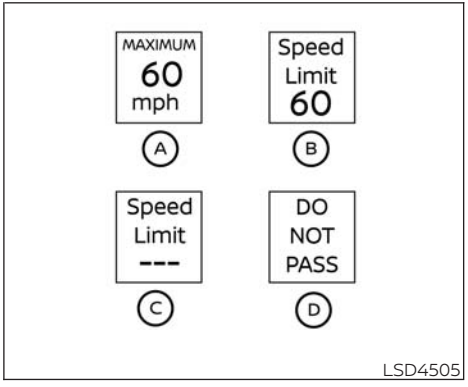

Ⓐ Speed sign detected (in Canada)

Ⓑ Speed sign detected (in USA)

Ⓒ Speed sign detected (no speed limit detected)

Ⓓ "Do not pass" sign detected

⚠ CAUTION

- **The TSR system is intended as an aid to careful driving. It is the driver's responsibility to stay alert, drive safely, and observe all road regulations that currently apply, including looking out for road signs.**

- **The TSR system may not function properly under the following conditions:**
  - **When the road sign is not clearly visible, for example, due to damage or weather conditions.**
  - **When rain, snow or dirt adheres to the windshield in front of the multi-sensing camera unit.**
  - **When the headlights are not bright, for example, due to dirt on the lens or if the aiming is not adjusted properly.**
  - **When strong light enters the camera unit. (For example, the light directly shines on the front of the vehicle at sunrise or sunset.)**
  - **When a sudden change in brightness occurs. (For example, when the vehicle enters or exits a tunnel or under a bridge.)**
  - **If there are deviations in relation to the navigation, for example due to changes in the road routing.**
  - **When overtaking buses or trucks with speed stickers.**

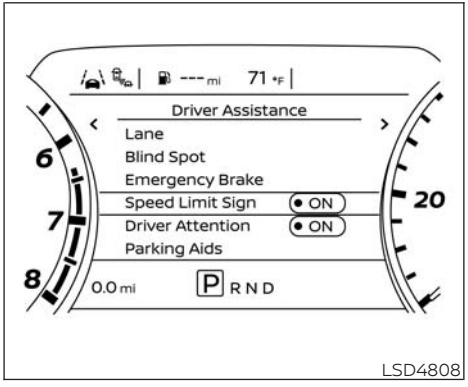

TURNING THE TRAFFIC SIGN RECOGNITION (TSR) SYSTEM ON AND OFF

Perform the following steps to enable or disable the TSR system.

1. Press the ◀ ▶ button until "Settings" displays in the vehicle information display. Use the ▲▼ button to select "Driver Assistance." Then press the ENTER button.
2. Select "Speed Limit Sign" and press the ENTER button to turn the system on or off.

SYSTEM TEMPORARILY UNAVAILABLE

If the vehicle is parked in direct sunlight under high temperature conditions (over approximately 104°F [40°C]) and then started, the TSR system may be deactivated automatically. The "Not Available High Camera Temp" warning message will appear in the vehicle information display.

Action to take:

When the interior temperature is reduced, the TSR system will resume operating automatically.

SYSTEM MALFUNCTION

If the TSR system malfunctions, it will be turned off automatically and the system "Malfunction" warning message will appear in the vehicle information display.

Action to take:

If the TSR "Malfunction" message appears, pull off the road at a safe location and stop the vehicle. Turn the engine off and restart the engine. If the TSR "Malfunction" message continues to appear, have the system checked. It is recommended that you visit a NISSAN dealer for this service.

SYSTEM MAINTENANCE

The TSR system uses the same multi-sensing front camera unit that is used by the Lane Departure Warning (LDW) system, located in front of the interior rearview mirror. For additional information, see "System maintenance" (P. 300).

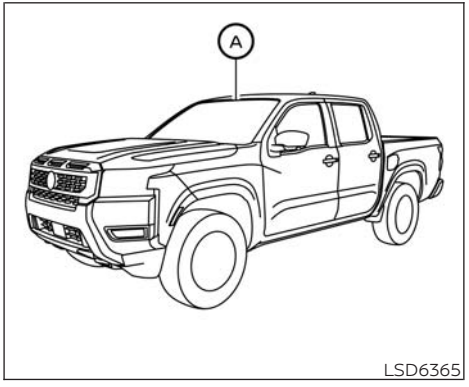

BASIC INFORMATION

WARNING

Failure to follow the warnings and instructions for proper use of the LDW system could result in serious injury or death.

- **This system is only a warning device to inform the driver of a potential unintended lane departure. It will not steer the vehicle or prevent loss of control. It is the driver's responsibility to stay alert, drive safely, keep the vehicle in the traveling lane, and be in control of the vehicle at all times.**

The LDW system will operate when the vehicle is driven at speeds of approximately 37 mph (60 km/h) and above, and only when the lane markings are clearly visible on the road.

The LDW system monitors the lane markers on the traveling lane using the camera unit Ⓐ located above the inside mirror.

The LDW system warns the driver that the vehicle is beginning to leave the driving lane with an indicator and a steering wheel vibration. For additional information, see "LDW system operation" (P. 297).

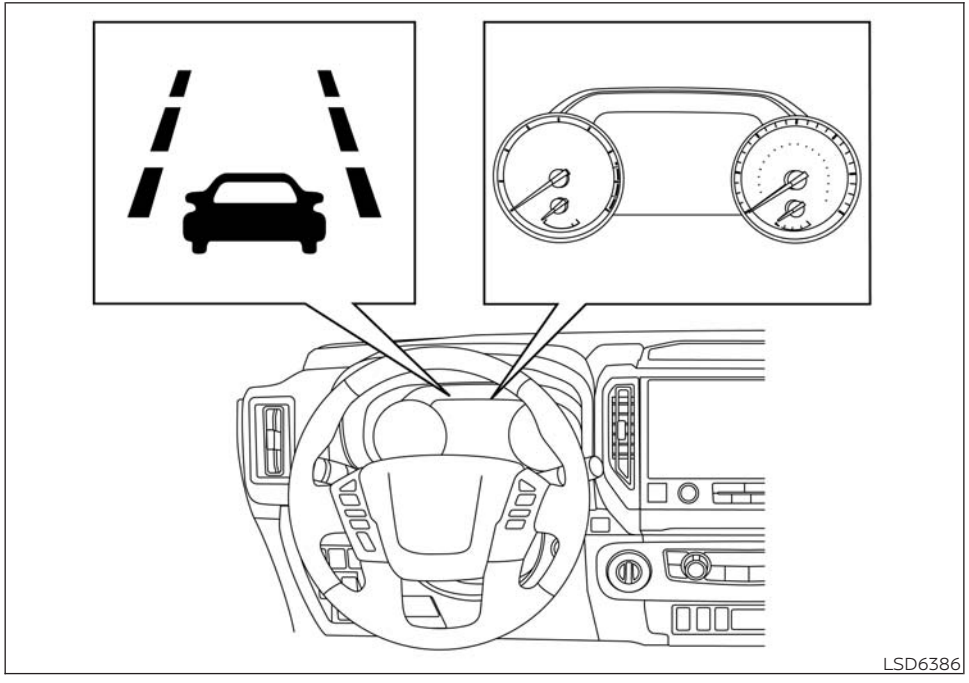

LDW SYSTEM OPERATION

The LDW system provides a lane departure warning function when the vehicle is driven at speeds of approximately 37 mph (60 km/h) and above and the lane markings are clear. When the vehicle approaches either the left or the right side of the traveling lane, the steering wheel will vibrate and the LDW indicator on the instrument panel will blink to alert the driver.

The warning function will stop when the vehicle returns inside of the lane markers.

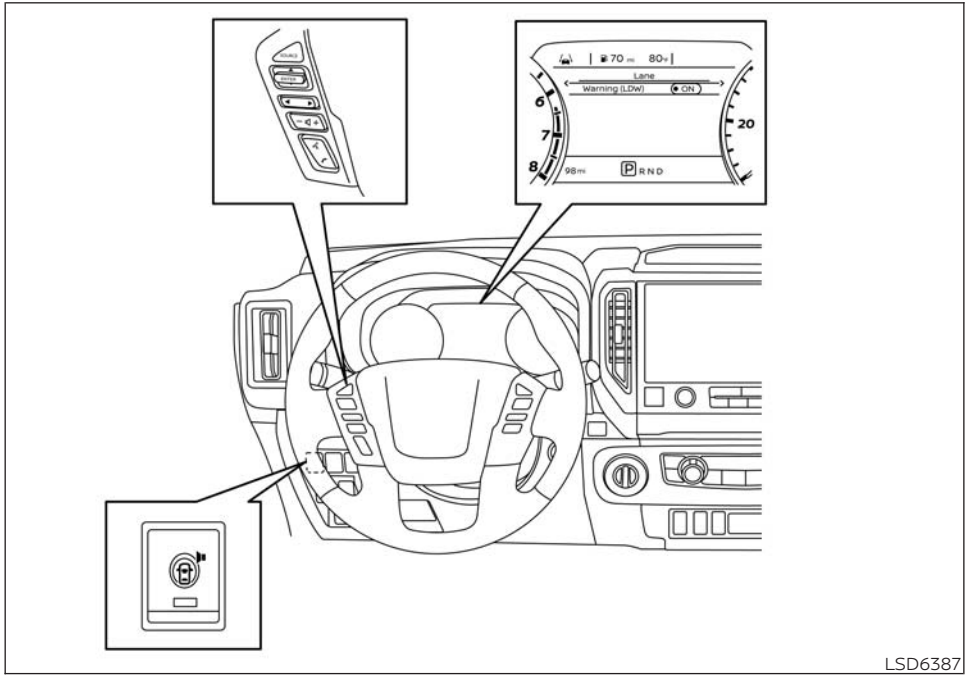

HOW TO ENABLE/DISABLE THE LDW SYSTEM

When the LDW system is enabled in the vehicle information display, the system can be turned off temporarily by pushing the warning systems switch. For additional information, see "Warning systems switch" (P. 160).

Perform the following steps to enable or disable the LDW system.

1. Press the ◀ ▶ button until "Settings" displays in the vehicle information display. Use the ▲▼ button to select "Driver Assistance." Then press the ENTER button.
2. Select "Lane" and press the ENTER button.
3. Select "Warning (LDW)" and press the ENTER button.
4. Push the Warning systems switch to turn the system on or off.

NOTE:

- **When enabling/disabling the system, the system will retain current settings even if the engine is restarted.**
- **When the LDW system is turned on, the LDW indicator (white) in the vehicle information display illuminates.**

LDW SYSTEM LIMITATIONS

⚠ WARNING

Listed below are the system limitations for the LDW system. Failure to follow the warnings and instructions for proper use of the LDW system could result in serious injury or death.

- **The system will not operate at speeds below approximately 37 mph (60 km/h) or if it cannot detect lane markers.**
- **Do not use the LDW system under the following conditions as it may not function properly:**
  - **During bad weather (rain, fog, snow, etc.).**
  - **When driving on slippery roads, such as on ice or snow.**
  - **When driving on winding or uneven roads.**
  - **When there is a lane closure due to road repairs.**
  - **When driving in a makeshift or temporary lane.**
  - **When driving on roads where the lane width is too narrow.**
  - **When driving without normal tire conditions (for example, tire wear, low tire pressure, installation of spare tire, tire chains, nonstandard wheels).**
  - **When the vehicle is equipped with non-original brake parts or suspension parts.**
  - **When you are towing a trailer or other vehicle.**
- **The system may not function properly under the following conditions:**
  - **On roads where there are multiple parallel lane markers; lane markers that are faded or not painted clearly; yellow painted lane markers; non-standard lane markers; or lane markers covered with water, dirt, snow, etc.**
  - **On roads where the discontinued lane markers are still detectable.**
  - **On roads where there are sharp curves.**
  - **On roads where there are sharply contrasting objects, such as shadows, snow, water, wheel ruts, seams or lines remaining after road repairs. (The LDW system could detect these items as lane markers.)**
  - **On roads where the traveling lane merges or separates.**
  - **When the vehicle's traveling direction does not align with the lane marker.**
  - **When traveling close to the vehicle in front of you, which obstructs the lane camera unit detection range.**
  - **When rain, snow, dirt or an object adheres to the windshield in front of the lane camera unit.**
  - **When the headlights are not bright due to dirt on the lens or if the aiming is not adjusted properly.**
  - **When strong light enters the lane camera unit. (For example, the light directly shines on the front of the vehicle at sunrise or sunset.)**
  - **When a sudden change in brightness occurs. (For example, when the vehicle enters or exits a tunnel or under a bridge.)**

SYSTEM TEMPORARILY DISABLED

If the vehicle is parked in direct sunlight under high temperature conditions (over approximately 104°F [40°C]) and then started, the LDW system may be deactivated automatically, the LDW indicator blinks (white) and the following message will appear in the vehicle information display: "Not Available High Camera Temp."

When the interior temperature is reduced, the LDW system will resume operating automatically.

The LDW system is not designed to warn under the following conditions:

- When you operate the lane change signal and change traveling lanes in the direction of the signal. (The LDW system will become operable again approximately 2 seconds after the lane change signal is turned off.)
- When the vehicle speed lowers to less than approximately 37 mph (60 km/h).

After the above conditions have finished and the necessary operating conditions are satisfied, the LDW functions will resume.

SYSTEM MALFUNCTION

If the LDW system malfunctions, it will cancel automatically, the LDW indicator blinks (yellow) and "Malfunction" will appear in the vehicle information display. If " Malfunction" appears in the vehicle information display, pull off the road to a safe location and stop the vehicle. Place the shift lever in the P (Park) position and the ignition switch in the OFF position and restart the engine/motor. If "Malfunction" continues to appear in the vehicle information display, have the system checked. It is recommended that you visit a NISSAN dealer for this service.

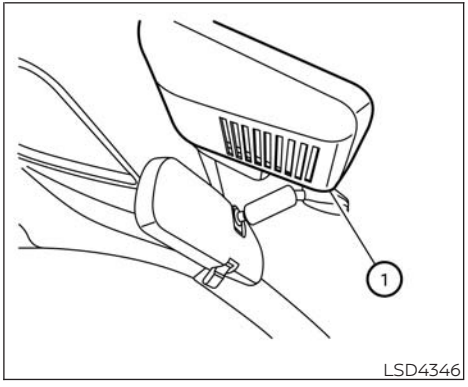

SYSTEM MAINTENANCE

The lane camera unit ① for the LDW system is located above the inside mirror. To keep the proper operation of the LDW system and prevent a system malfunction, be sure to observe the following:

- Always keep the windshield clean.
- Do not attach a sticker (including transparent material) or install an accessory near the camera unit.

- Do not place reflective materials, such as white paper or a mirror, on the instrument panel. The reflection of sunlight may adversely affect the camera unit's capability of detecting the lane markers.
- Do not strike or damage the areas around the camera unit. Do not touch the camera lens or remove the screw located on the camera unit. If the camera unit is damaged due to an accident, it is recommended that you visit a NISSAN dealer.

BASIC INFORMATION

WARNING

Failure to follow the warnings and instructions for proper use of the BSW system could result in serious injury or death.

- **The BSW system is not a replacement for proper driving procedures and is not designed to prevent contact with vehicles or objects. When changing lanes, always use the side and rear mirrors and turn and look in the direction your vehicle will move to ensure it is safe to change lanes. Never rely solely on the BSW system.**
- **Do not use the BSW system when towing a trailer. The system may not function properly.**

The BSW system helps alert the driver of other vehicles in adjacent lanes when changing lanes.

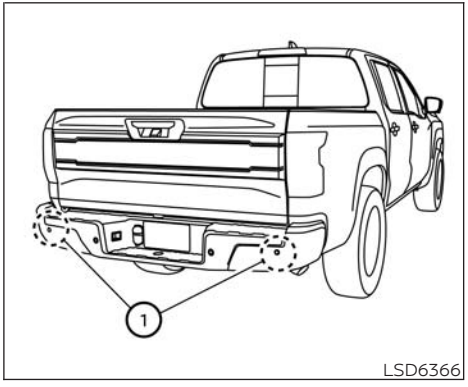

The BSW system uses radar sensors ① installed near the rear bumper to detect other vehicles in an adjacent lane.

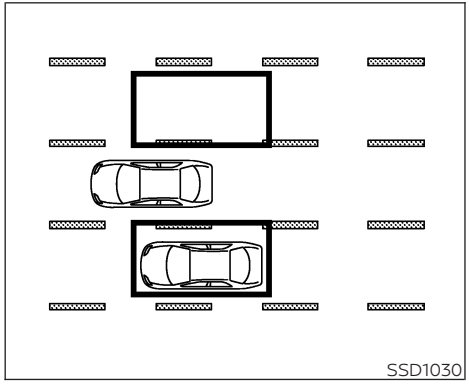

Detection zone

The radar sensors can detect vehicles on either side of your vehicle within the detection zone shown as illustrated. This detection zone starts from the outside mirror of your vehicle and extends approximately 10 ft (3.0 m) behind the rear bumper, and approximately 10 ft (3.0 m) sideways.

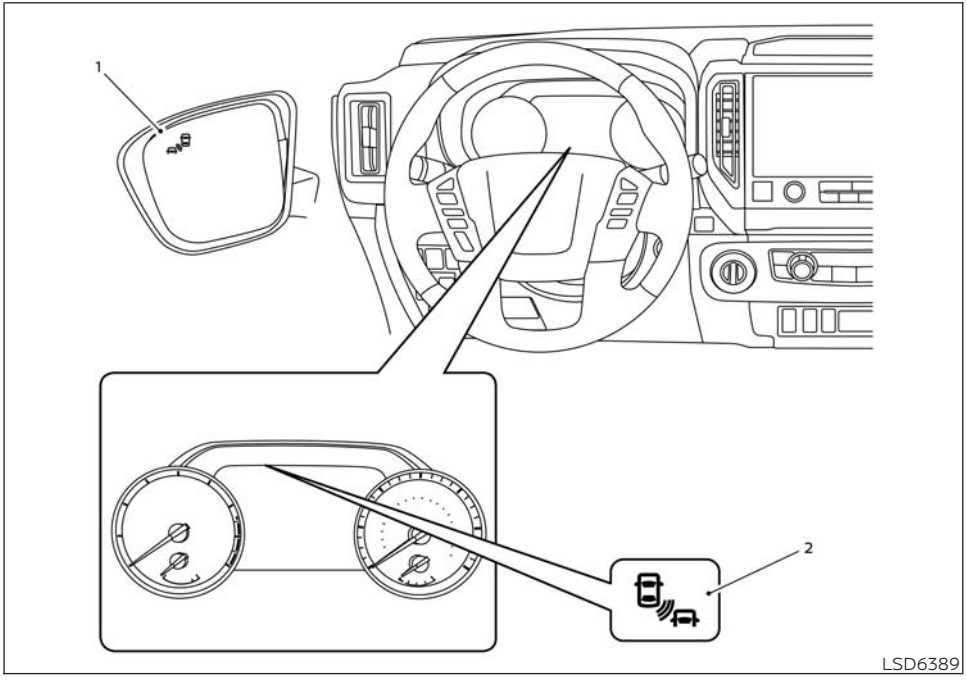

1. Side BSW/RCTA Indicator Light
2. BSW Indicator

BSW SYSTEM OPERATION

The BSW system operates above approximately 20 mph (32 km/h).

If the radar sensors detect a vehicle in the detection zone, the side BSW/RCTA indicator light (1) illuminates. If the turn signal is then activated, the system chimes (twice) and the side BSW/RCTA indicator light flashes and the BSW indicator blinks (yellow) in the vehicle information display. The side BSW/RCTA indicator light continues to flash until the detected vehicle leaves the detection zone.

The side BSW/RCTA indicator light illuminates for a few seconds when the ignition switch is placed in the ON position.

The brightness of the side BSW/RCTA indicator light is adjusted automatically depending on the brightness of the ambient light.

If a vehicle comes into the detection zone after the driver activates the turn signal, the side BSW/RCTA indicator light and the BSW indicator flashes and no chime sounds. For additional information, see "BSW driving situations" (P. 305).

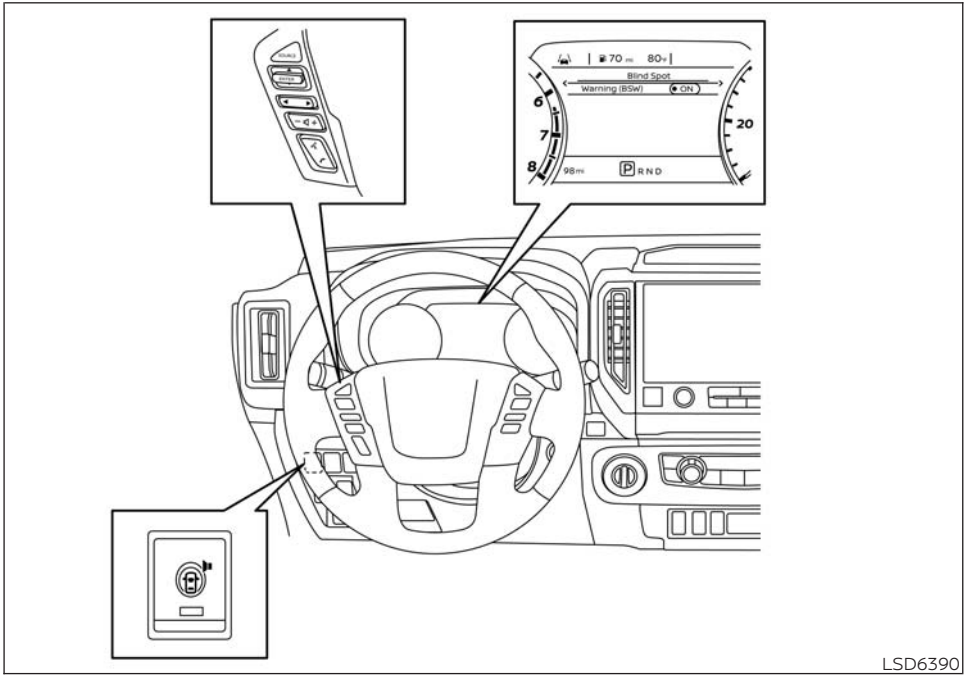

LSD6390

HOW TO ENABLE/DISABLE THE BSW SYSTEM

When the BSW system is enabled in the vehicle information display, the system can be turned off temporarily by pushing the

warning systems switch. For additional information, see "Warning systems switch" (P. 160).

Perform the following steps to enable or disable the BSW system:

1. Press the ◀ ▶ button until "Settings" displays in the vehicle information display. Use the ▲▼ button to select "Driver Assistance" and press ENTER.
2. Select "Blind Spot" and press ENTER.
3. Select "Warning (BSW)" and press ENTER.
4. Push the Warning systems switch to turn the system on or off.

NOTE:

- **When enabling/disabling the system, the system will retain current settings even if the engine is restarted.**
- **When the BSW system is turned on, the BSW/RCTA indicator (white) in the vehicle information display illuminates.**

BSW SYSTEM LIMITATIONS

⚠ WARNING

Listed below are the system limitations for the BSW system. Failure to operate the vehicle in accordance with these system limitations could result in serious injury or death.

- **The BSW system cannot detect all vehicles under all conditions.**
- **The radar sensors may not be able to detect and activate BSW when certain objects are present such as:**
  - **Pedestrian, bicycles, animals.**
  - **Vehicles such as motorcycles, low height vehicles, or high ground clearance vehicles.**
  - **Oncoming vehicles.**
  - **Vehicles remaining in the detection zone when you accelerate from a stop.**
  - **A vehicle merging into an adjacent lane at a speed approximately the same as your vehicle.**
  - **A vehicle approaching rapidly from behind.**
  - **A vehicle which your vehicle overtakes rapidly.**
  - **A vehicle that passes through the detection zone quickly.**
  - **When overtaking several vehicles in a row, the vehicles after the first vehicle may not be detected if they are traveling close together.**
- **The radar sensor's detection zone is designed based on a standard lane width. When driving in a wider lane, the radar sensors may not detect vehicles in an adjacent lane. When driving in a narrow lane, the radar sensors may detect vehicles driving two lanes away.**
- **The radar sensors are designed to ignore most stationary objects; however, objects such as guardrails, walls, foliage and parked vehicles may occasionally be detected. This is a normal operation condition.**
- **The following conditions may reduce the ability of the radar to detect other vehicles:**
  - **Severe weather**
  - **Road spray**
  - **Ice/frost/snow/dirt build-up on the vehicle**

- **Do not attach stickers (including transparent material), install accessories or apply additional paint near the radar sensors. These conditions may reduce the ability of the radar to detect other vehicles.**
- **Excessive noise (for example, audio system volume, open vehicle window) will interfere with the chime sound, and it may not be heard.**

BSW DRIVING SITUATIONS

Basic Information

Indicator on ●

Indicator off ○

Indicator flashing ◉

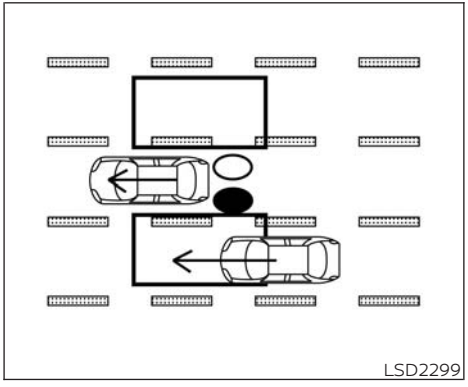

Illustration 1 – Approaching from behind

Another vehicle approaching from behind

Illustration 1: The side BSW/RCTA indicator light illuminates if a vehicle enters the detection zone from behind in an adjacent lane.

NOTE:

- **The radar sensors may not detect vehicles which are approaching rapidly from behind.**

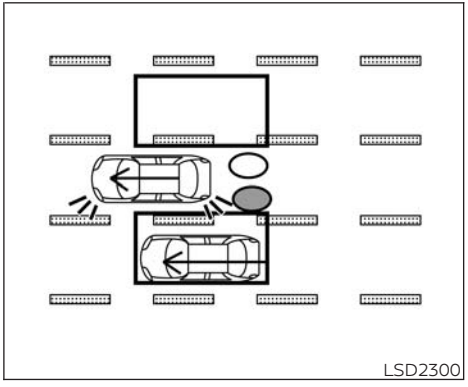

Illustration 2 – Approaching from behind

Illustration 2: If the driver activates the turn signal when another vehicle is in the detection zone, then the system chimes (twice) and the side BSW/RCTA indicator light and the BSW indicator (yellow) flash.

NOTE:

- **The radar sensors may not detect vehicles which are approaching rapidly from behind.**

- **If the driver activates the turn signal before a vehicle enters the detection zone, the side BSW/RCTA indicator light and the BSW indicator (yellow) will flash but no chime will sound when the other vehicle is detected.**

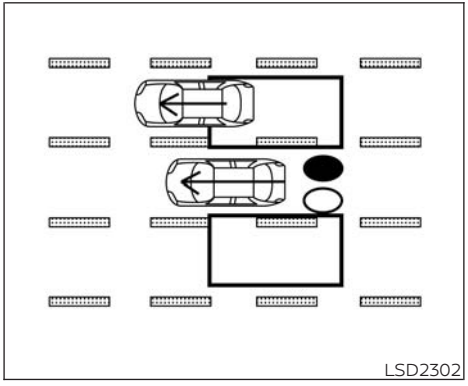

Illustration 3 – Overtaking another vehicle

Overtaking another vehicle

Illustration 3: The side BSW/RCTA indicator light illuminates if you overtake a vehicle and that vehicle stays in the detection zone for approximately 2 seconds.

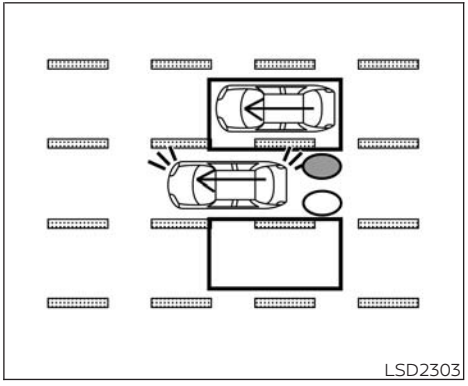

Illustration 4 – Overtaking another vehicle

Illustration 4: If the driver activates the turn signal while another vehicle is in the detection zone, then the system chimes (twice) and the side BSW/RCTA indicator light and the BSW indicator (yellow) flash.

NOTE:

- **When overtaking several vehicles in a row, the vehicles after the first vehicle may not be detected if they are traveling close together.**

- **The radar sensors may not detect slower moving vehicles if they are passed quickly.**
- **If the driver activates the turn signal before a vehicle enters the detection zone, the side BSW/RCTA indicator light and the BSW indicator (yellow) will flash but no chime will sound when the other vehicle is detected.**

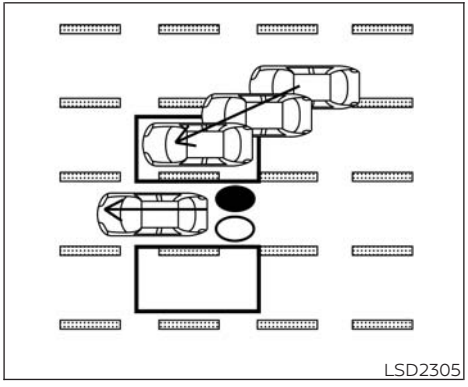

Illustration 5 – Entering from the side

Entering from the side

Illustration 5: The side BSW/RCTA indicator light illuminates if a vehicle enters the detection zone from either side.

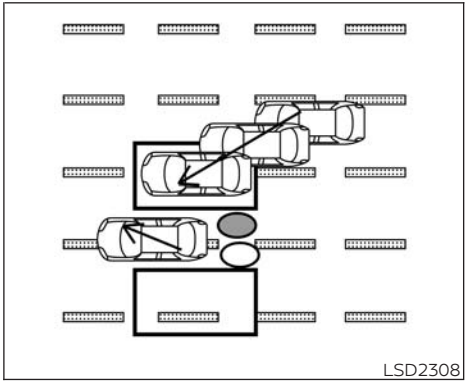

Illustration 6 – Entering from the side

Illustration 6: If the driver activates the turn signal while another vehicle is in the detection zone, then the system chimes (twice) and the side BSW/RCTA indicator light and the BSW indicator (yellow) flash.

NOTE:

- **If the driver activates the turn signal before a vehicle enters the detection zone, the side BSW/RCTA indicator light and the BSW indicator (yellow) will flash but no chime will sound when the other vehicle is detected.**

- **The radar sensors may not detect a vehicle which is traveling at about the same speed as your vehicle when it enters the detection zone.**

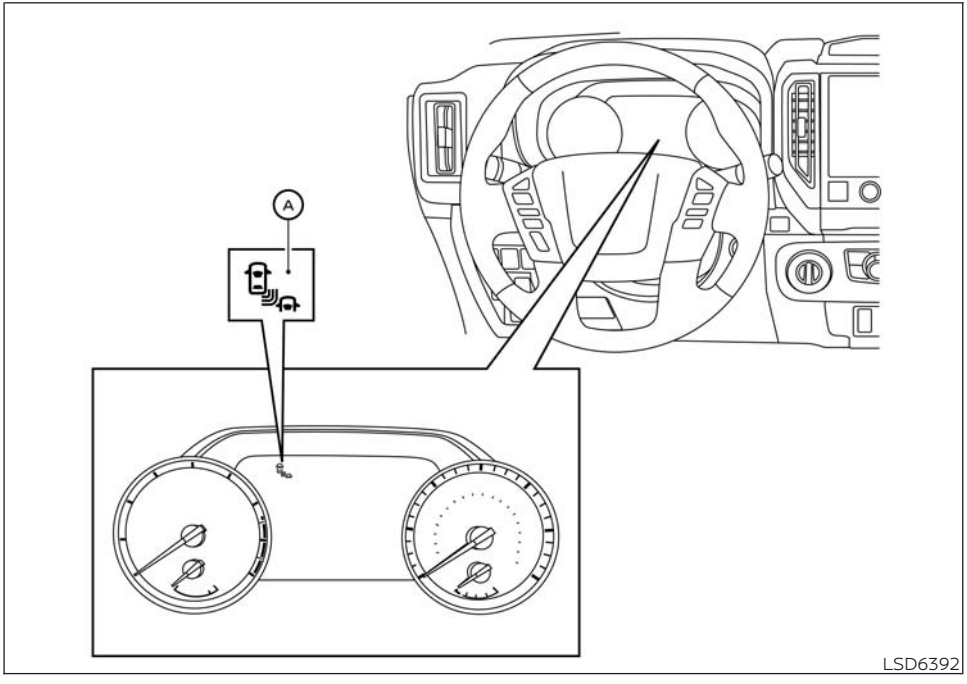

SYSTEM TEMPORARILY UNAVAILABLE

Basic Information

When radar blockage is detected, the system will be deactivated automatically. The

"Unavailable Side Radar Obstruction" warning message will appear and the BSW/RCTA indicator (white) will blink Ⓐ in the vehicle information display.

The system is not available until the conditions no longer exist.

The radar sensors may be blocked by temporary ambient conditions such as splashing water, mist or fog. The blocked condition may also be caused by objects such as ice, frost or dirt obstructing the radar sensors.

NOTE:

If the BSW system stops working, the RCTA system (if so equipped) will also stop working.

Action to take:

When the above conditions no longer exist, the system will resume automatically.

Malfunction

If the BSW system malfunctions, it will turn off automatically. The system malfunction warning message with the BSW/RCTA indicator (orange) will appear in the vehicle information display.

NOTE:

If the BSW system stops working, the RCTA system will also stop working.

Action to take:

Stop the vehicle in a safe location, place the vehicle in the P (Park) position, turn the engine off and restart the engine. If the message continues to appear, have the system checked. It is recommended that you visit a NISSAN dealer for this service.

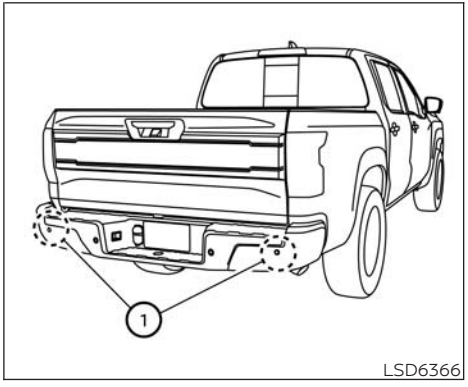

LSD6366

SYSTEM MAINTENANCE

Basic Information

The two radar sensors ① for the BSW and RCTA systems are located near the rear bumper. Always keep the area near the radar sensors clean.

The radar sensors may be blocked by temporary ambient conditions such as splashing water, mist or fog.

The blocked condition may also be caused by objects such as ice, frost or dirt obstructing the radar sensors.

Check for and remove objects obstructing the area around the radar sensors.

Do not attach stickers (including transparent material), install accessories or apply additional paint near the radar sensors.

Do not strike or damage the area around the radar sensors. It is recommended that you visit a NISSAN dealer if the area around the radar sensors is damaged due to a collision.

Radio frequency statement

For USA

This device complies with Part 15 of the FCC Rules. Operation is subject to the following two conditions:

1. **This device may not cause harmful interference, and**
2. **This device must accept any interference received, including interference that may cause undesired operation.**

CAUTION TO USERS

Changes or modifications not expressly approved by the party responsible for compliance could void the user's authority to operate the equipment.

For Canada

This device contains licence-exempt transmitter(s)/receiver(s) that comply with Innovation, Science and Economic Development Canada's licence-exempt RSS(s). Operation is subject to the following two conditions:

1. This device may not cause interference.

2. This device must accept any interference, including interference that may cause undesired operation of the device.

Radiofrequency radiation exposure information:

This equipment complies with radiation exposure limits set forth for an uncontrolled environment. This equipment should be installed and operated with minimum distance of 20 cm between the radiator and the body of any persons, user or bystander.

L'émetteur/récepteur exempt de licence contenu dans le présent appareil est conforme aux CNR d'Innovation, Sciences et Développement économique Canada applicables aux appareils radio exempts de licence. L'exploitation est autorisée aux deux conditions suivantes:

1. L'appareil ne doit pas produire de brouillage;

2. L'appareil doit accepter tout brouillage radioélectrique subi, même si le brouillage est susceptible d'en compromettre le fonctionnement.

Cet équipement est conforme aux limites d'exposition aux rayonnements établies pour un environnement non contrôlé. Cet équipement doit être installé et utilisé avec un minimum de 20 cm de distance entre la source de rayonnement et votre corps.

BASIC INFORMATION

⚠ WARNING

Failure to follow the warnings and instructions for proper use of the RCTA system could result in serious injury or death.

- **The RCTA system is not a replacement for proper driving procedures and is not designed to prevent contact with vehicles or objects. When backing out of a parking space, always use the side and rear mirrors and turn and look in the direction your vehicle will move. Never rely solely on the RCTA system.**

The RCTA system will assist you when backing out from a parking space. When the vehicle is in reverse, the system is designed to detect other vehicles approaching from the right or left of the vehicle. If the system detects cross traffic, it will alert you.

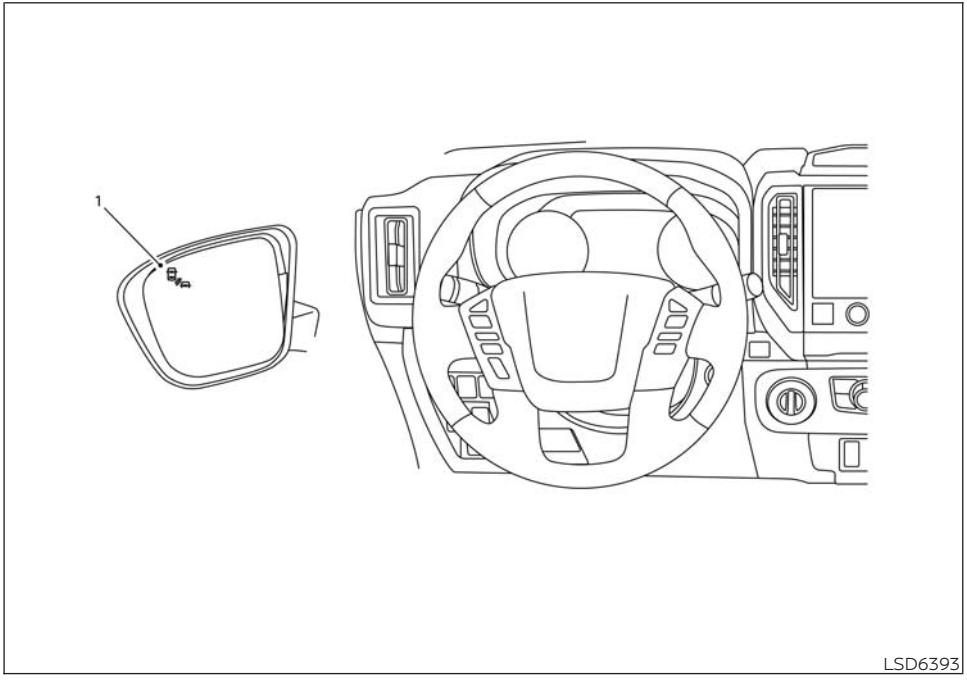

RCTA SYSTEM OPERATION

1. Side BSW/RCTA Indicator Light

The RCTA system can help alert the driver of an approaching vehicle when the driver is backing out of a parking space.

When the shift position is in R (Reverse) and the vehicle speed is less than approximately 5 mph (8 km/h), the RCTA system is operational.

If the radar detects an approaching vehicle from either side, the system chimes (once) and the side BSW/RCTA indicator light flashes on the side the vehicle is approaching from.

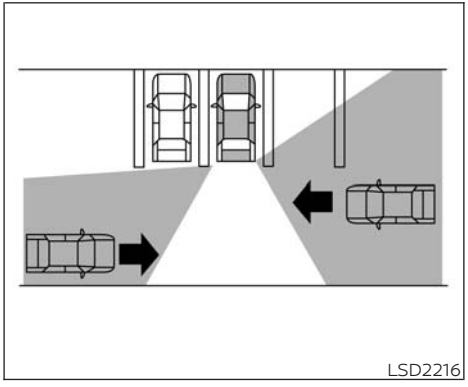
LSD2216

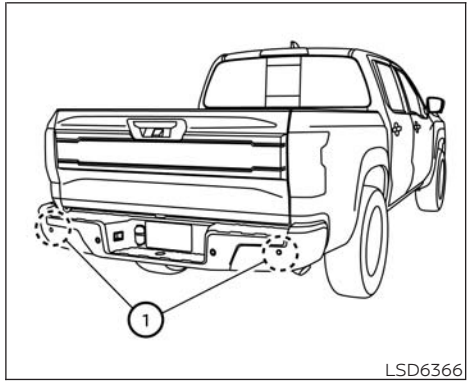

LSD6366

The RCTA system uses radar sensors ① installed on both sides near the rear bumper to detect an approaching vehicle.

The radar sensors ① can detect an approaching vehicle from up to approximately 66 ft (20 m) away.

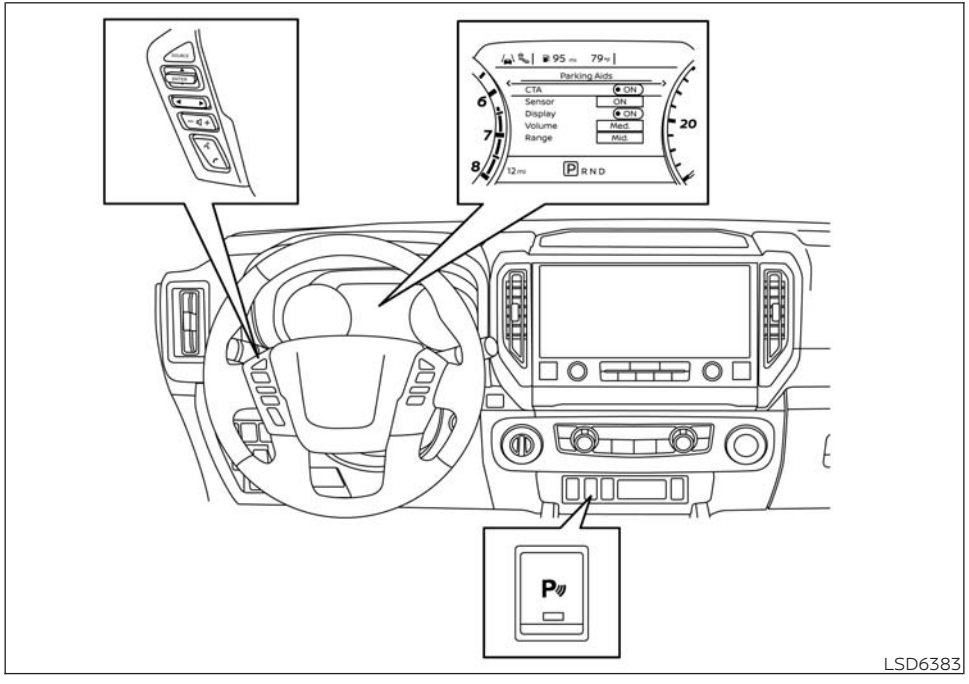

HOW TO ENABLE/DISABLE THE RCTA SYSTEM

When the RCTA system is enabled in the vehicle information display, the system can be turned off temporarily by pushing the Parking Aids system switch. For additional information, see "Parking Aids system switch" (P. 162).

Perform the following steps to enable or disable the RCTA system:

1. Press the ◀▶ button until "Settings" displays in the vehicle information display. Use the ▲▼ button to select "Driver Assistance" and press ENTER.
2. Select "Parking Aids" and press ENTER.
3. Select "CTA" and press the ENTER button to turn system on or off.
4. Push the Parking Aids system switch to turn the system on or off.

NOTE:

When enabling/disabling the system, the system setting will be retained even if the engine is restarted.

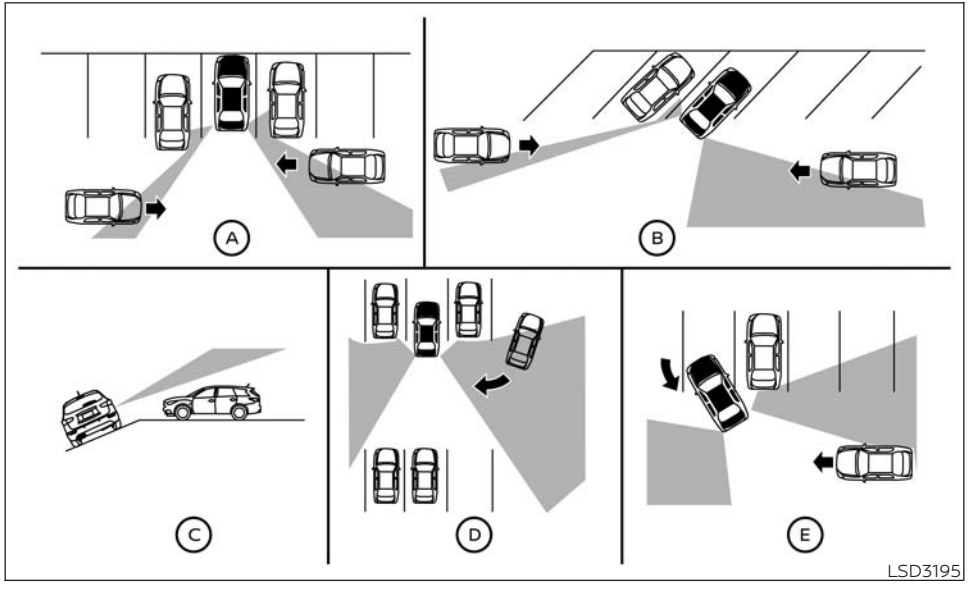

RCTA SYSTEM LIMITATIONS

⚠WARNING

Listed below are the system limitations for the RCTA system. Failure to operate the vehicle in accordance with these system limitations could result in serious injury or death.

- **Always check surroundings and turn to check what is behind you before backing up. The radar sensors detect approaching (moving) vehicles. The radar sensors cannot detect every object such as:**
  - **Pedestrians, bicycles, motorcycles, animals or child-operated toy vehicles**
  - **A vehicle that is passing at speeds greater than approximately 19 mph (30 km/h)**
  - **A vehicle that is passing at speeds lower than approximately 5 mph (8 km/h)**
- **The radar sensors may not detect approaching vehicles in certain situations:**
  - **Illustration Ⓐ: When a vehicle parked next to you obstructs the beam of the radar sensor.**
  - **Illustration Ⓑ: When the vehicle is parked in an angled parking space.**
  - **Illustration Ⓒ: When the vehicle is parked on inclined ground.**
  - **Illustration Ⓓ: When an approaching vehicle turns into your vehicle's parking lot aisle.**

- Illustration Ⓔ: When the angle formed by your vehicle and approaching vehicle is small.

- The following conditions may reduce the ability of the radar to detect other vehicles:
  - Severe weather
  - Road spray
  - Ice/frost/snow/dirt build-up on the vehicle
- Do not attach stickers (including transparent material), install accessories or apply additional paint near the radar sensors. These conditions may reduce the ability of the radar to detect other vehicles.
- Excessive noise (e.g., audio system volume, open vehicle window) will interfere with the chime sound, and it may not be heard.

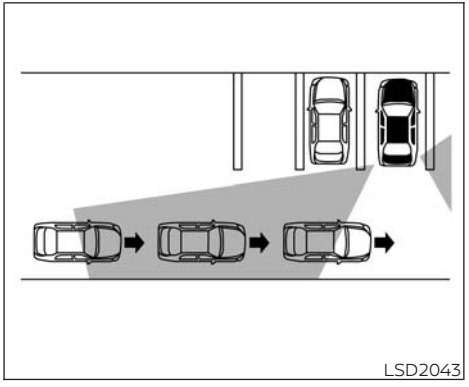

Illustration 1

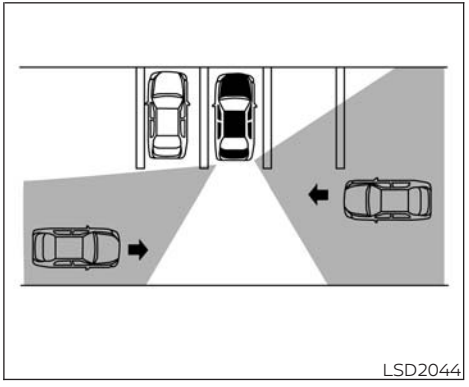

Illustration 2

NOTE:

In the case of several vehicles approaching in a row (Illustration 1) or in the opposite direction (Illustration 2), a chime may not be sounded by the RCTA system after the first vehicle passes the sensors.

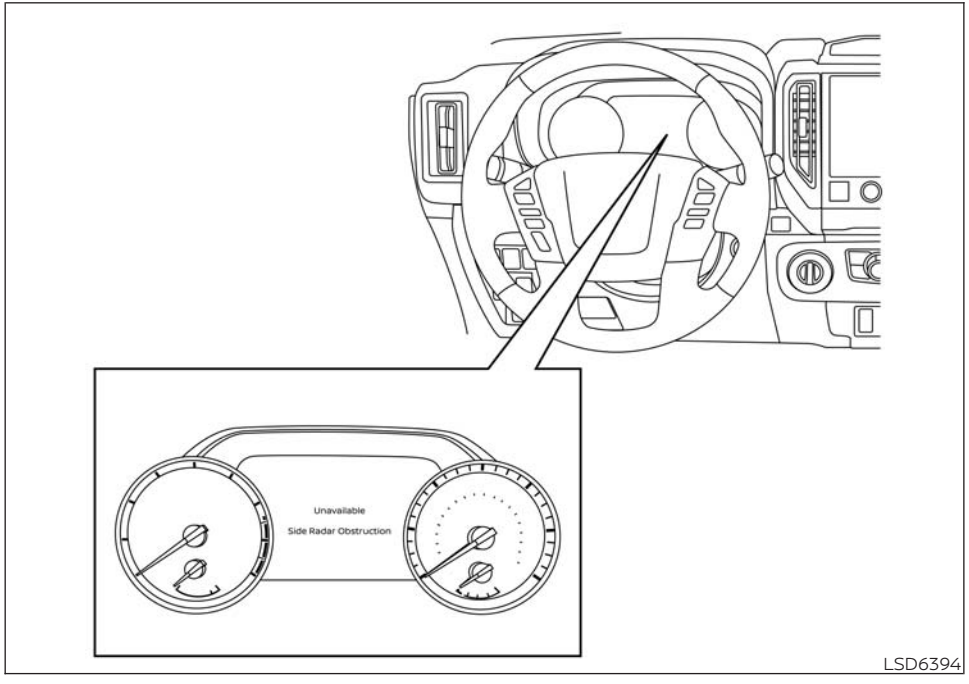

SYSTEM TEMPORARILY UNAVAILABLE

Basic Information

When radar blockage is detected, the system will be deactivated automatically. The "Unavailable Side Radar Obstruction" warning message will appear in the vehicle information display.

The systems are not available until the conditions no longer exist.

The radar sensors may be blocked by temporary ambient conditions such as splashing water, mist or fog.

The blocked condition may also be caused by conditions such as ice, snow, frost or dirt obstructing the radar sensors.

NOTE:

If the BSW system stops working, the RCTA system will also stop working.

Action to take:

When the above conditions no longer exist, the system will resume automatically.

Malfunction

When the RCTA system malfunctions, it will turn off automatically. The system malfunction warning message will appear in the vehicle information display.

NOTE:

If the BSW system stops working, the RCTA system will also stop working.

Action to take:

Stop the vehicle in a safe location, place the vehicle in the P (Park) position, turn the engine off and restart the engine. If the message continues to appear, have the system checked. It is recommended that you visit a NISSAN dealer for this service.

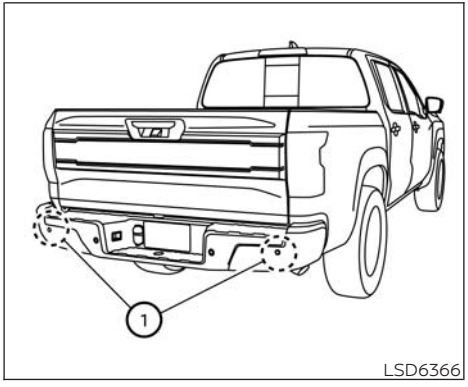

SYSTEM MAINTENANCE

Basic Information

The two radar sensors ① for the BSW and RCTA systems are located near the rear bumper. Always keep the area near the radar sensors clean.

The radar sensors may be blocked by temporary ambient conditions such as splashing water, mist or fog.

The blocked condition may also be caused by objects such as ice, frost or dirt obstructing the radar sensors.

Check for and remove objects obstructing the area around the radar sensors.

Do not attach stickers (including transparent material), install accessories or apply additional paint near the radar sensors.

Do not strike or damage the area around the radar sensors. It is recommended that you visit a NISSAN dealer if the area around the radar sensors is damaged due to a collision.

Radio frequency statement

For USA

This device complies with Part 15 of the FCC Rules. Operation is subject to the following two conditions:

1. **This device may not cause harmful interference, and**
2. **This device must accept any interference received, including interference that may cause undesired operation.**

CAUTION TO USERS

Changes or modifications not expressly approved by the party responsible for compliance could void the user's authority to operate the equipment.

For Canada

This device contains licence-exempt transmitter(s)/receiver(s) that comply with Innovation, Science and Economic Development Canada's licence-exempt RSS(s). Operation is subject to the following two conditions:

1. This device may not cause interference.

2. This device must accept any interference, including interference that may cause undesired operation of the device.

Radiofrequency radiation exposure information:

This equipment complies with radiation exposure limits set forth for an uncontrolled environment. This equipment should be installed and operated with minimum distance of 20 cm between the radiator and the body of any persons, user or bystander.

L'émetteur/récepteur exempt de licence contenu dans le présent appareil est conforme aux CNR d'Innovation, Sciences et Développement économique Canada applicables aux appareils radio exempts de licence. L'exploitation est autorisée aux deux conditions suivantes:

1. L'appareil ne doit pas produire de brouillage;

2. L'appareil doit accepter tout brouillage radioélectrique subi, même si le brouillage est susceptible d'en compromettre le fonctionnement.

Cet équipement est conforme aux limites d'exposition aux rayonnements établies pour un environnement non contrôlé. Cet équipement doit être installé et utilisé avec un minimum de 20 cm de distance entre la source de rayonnement et votre corps.

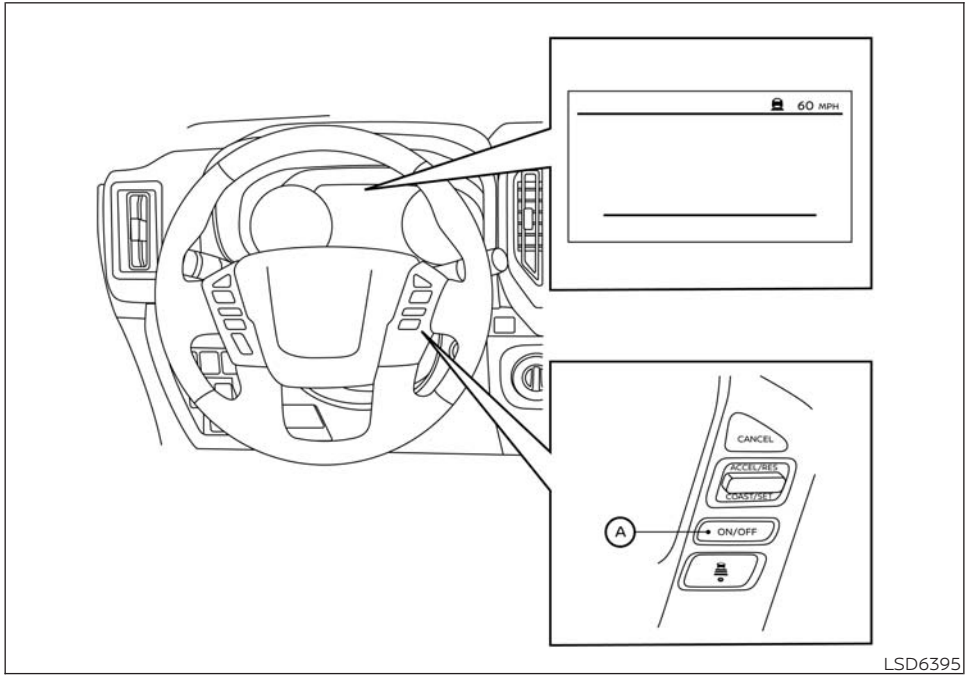

BASIC INFORMATION

Ⓐ ICC switch

⚠ WARNING

Failure to follow the warnings and instructions for proper use of the ICC system could result in serious injury or death.

- **The ICC system is only an aid to assist the driver and is not a collision warning or avoidance device. It is the driver's responsibility to stay alert, drive safely, and be in control of the vehicle at all times.**
- **Always observe posted speed limits and do not set the speed over them.**
- **Always drive carefully and attentively when using the ICC system. Read and understand the Owner's Manual thoroughly before using the ICC system. To avoid serious injury or death, do not rely on the system to prevent accidents or to control the vehicle's speed in emergency situations. Do not use the ICC system except in appropriate road and traffic conditions.**

- **In the conventional (fixed speed) cruise control mode, a warning chime will not sound to warn you if you are too close to the vehicle ahead. Pay special attention to the distance between your vehicle and the vehicle ahead of you or a collision could occur.**

The ICC system maintains a selected distance from the vehicle in front of you within the speed range of 0 to 90 mph (0 to 144 km/h) up to the set speed. The set speed can be selected by the driver between 20 to 90 mph (30 to 144 km/h).

The vehicle travels at a set speed when the road ahead is clear.

The ICC system can be set to one of two cruise control modes:

- **Vehicle-to-vehicle distance control mode:** For maintaining a selected distance between your vehicle and the vehicle in front of you up to the preset speed
- **Conventional (fixed speed) cruise control mode:** For cruising at a preset speed

Push the ICC switch Ⓐ to choose the cruise control mode between the vehicle-to-vehicle distance control mode and the conventional (fixed speed) cruise control mode.

Once a control mode is activated, it cannot be changed to the other cruise control mode. To change the mode, push the ICC switch Ⓐ once to turn the system off. Then push the ICC switch Ⓐ again to turn the system back on and select the desired cruise control mode.

Always confirm the setting in the ICC system display.

For the vehicle-to-vehicle distance control mode, see "Vehicle-to-vehicle distance control mode" (P. 321).

For the conventional (fixed speed) cruise control mode, see "Conventional (fixed speed) cruise control mode" (P. 338).

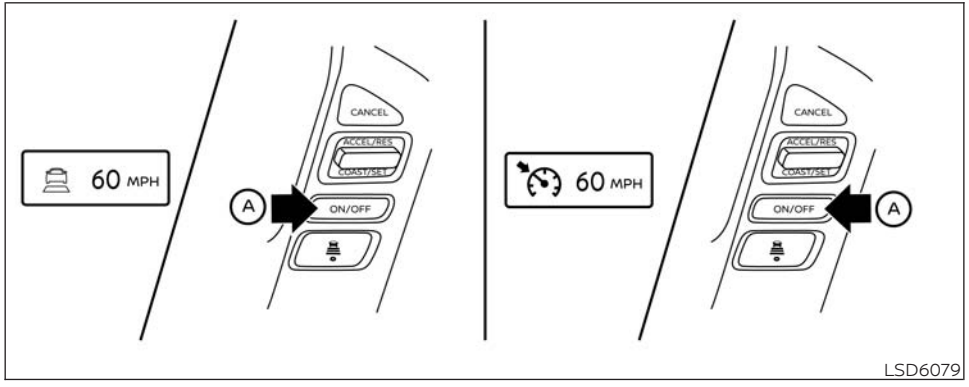

LSD6079

HOW TO SELECT THE CRUISE CONTROL MODE

Selecting the vehicle-to-vehicle distance control mode: To choose the vehicle-to-vehicle distance control mode, quickly push and release the ICC switch Ⓐ.

Selecting the conventional (fixed speed) cruise control mode: To choose the conventional (fixed speed) cruise control mode, push and hold the ICC switch Ⓐ for longer than approximately 1.5 seconds. For additional information, see "Conventional (fixed speed) cruise control mode" (P. 338).

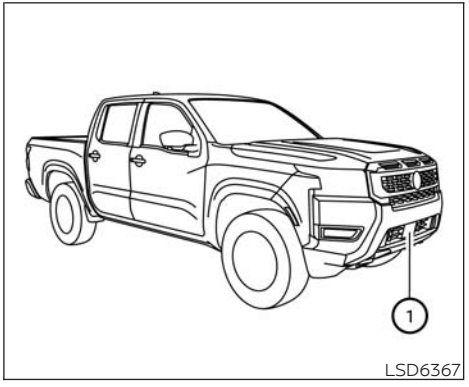

LSD6367

VEHICLE-TO-VEHICLE DISTANCE CONTROL MODE

In the vehicle-to-vehicle distance control mode, the ICC system automatically maintains a selected distance from the vehicle traveling in front of you according to that vehicle's speed (up to the set speed), or at the set speed when the road ahead is clear.

The ICC system is intended to enhance the operation of the vehicle when following a vehicle traveling in the same lane and direction.

If the radar sensor ① detects a slower moving vehicle ahead, the system will reduce the vehicle speed so that your vehicle follows the vehicle in front at the selected distance.

The system automatically controls the throttle and applies the brakes (up to approximately 40% of vehicle braking power) if necessary.

The detection range of the sensor is approximately 650 ft (200 m) ahead.

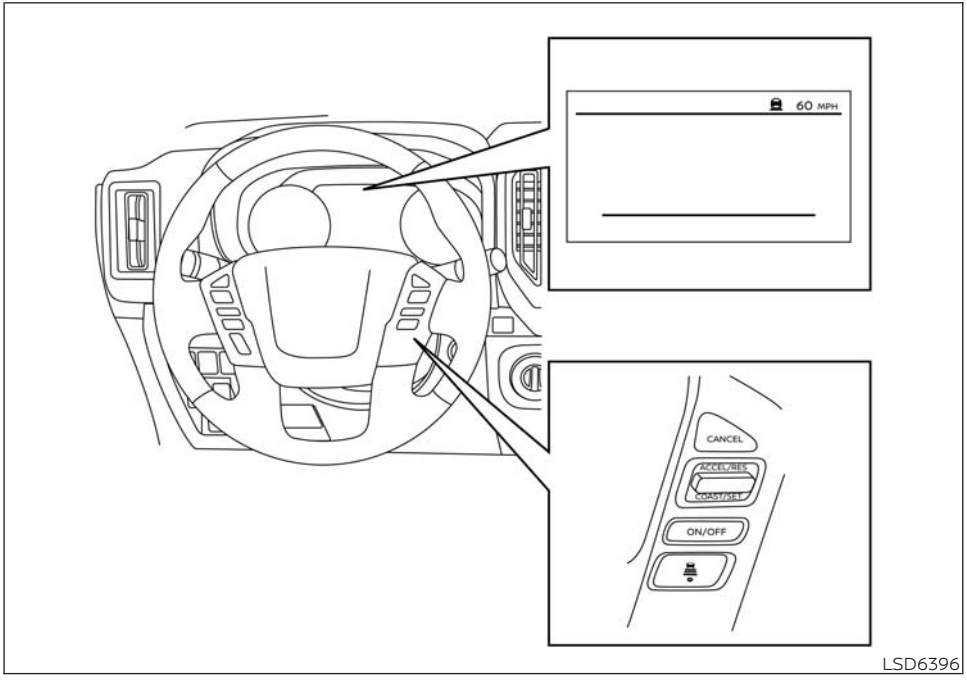

VEHICLE-TO-VEHICLE DISTANCE CONTROL MODE OPERATION

The vehicle-to-vehicle distance control mode is designed to maintain a selected distance from the vehicle in front of you and can reduce the speed to match a

slower vehicle ahead. The system will decelerate the vehicle as necessary and if the vehicle ahead comes to a stop, the vehicle decelerates to a standstill. However, the ICC system can only apply up to 40% of the vehicle's total braking power.

This system should only be used when traffic conditions allow vehicle speeds to remain fairly constant or when vehicle speeds change gradually. If a vehicle moves into the traveling lane ahead or if a vehicle traveling ahead rapidly decelerates, the distance between vehicles may become closer because the ICC system cannot decelerate the vehicle quickly enough. If this occurs, the ICC system will sound a warning chime and blink the system display to notify the driver to take necessary action.

The system will cancel and a warning chime will sound if the speed is below approximately 15 mph (25 km/h) and a vehicle is not detected ahead. The system will also disengage when the vehicle goes above the maximum set speed.

For additional information, see "Approach warning" (P. 329).

The following items are controlled in the vehicle-to-vehicle distance control mode:

- When there are no vehicles traveling ahead, the vehicle-to-vehicle distance control mode maintains the speed set by the driver. The set speed range is between approximately 20 and 90 mph (30 and 144 km/h).
- When there is a vehicle traveling ahead, the vehicle-to-vehicle distance control mode adjusts the speed to maintain the distance, selected by the driver, from the vehicle ahead. If the vehicle ahead comes to a stop, the vehicle decelerates to a standstill within the limitations of the system. The system will cancel once it judges a standstill with a warning chime.
- When the vehicle traveling ahead has moved out from its lane of travel, the vehicle-to-vehicle distance control mode accelerates and maintains vehicle speed up to the set speed.

The ICC system does not control vehicle speed or warn you when you approach stationary and slow moving vehicles. You must pay attention to vehicle operation to maintain proper distance from vehicles ahead when approaching toll gates or traffic congestion.

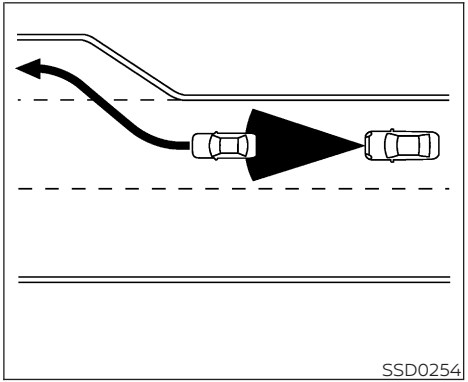

When driving on the freeway at a set speed and approaching a slower traveling vehicle ahead, the ICC system will adjust the speed to maintain the distance, selected by the driver, from the vehicle ahead. If the vehicle ahead changes lanes or exits the freeway, the ICC system will accelerate and maintain the speed up to the set speed. Pay attention to the driving operation to maintain control of the vehicle as it accelerates to the set speed.

The vehicle may not maintain the set speed on winding or hilly roads. If this occurs, you will have to manually control the vehicle speed.

Normally when controlling the distance to a vehicle ahead, this system automatically accelerates or decelerates your vehicle according to the speed of the vehicle ahead. Depress the accelerator to properly accelerate your vehicle when acceleration is required for a lane change. Depress the brake pedal when deceleration is required to maintain a safe distance to the vehicle ahead due to its sudden braking or if a vehicle cuts in. Always stay alert when using the ICC system.

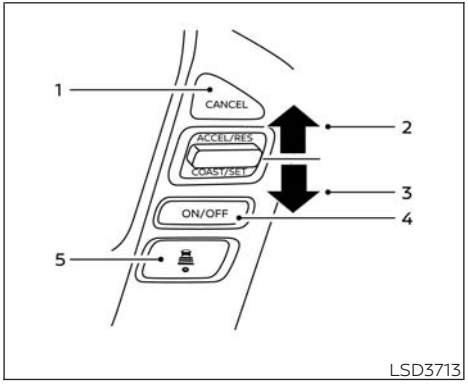

VEHICLE-TO-VEHICLE DISTANCE CONTROL MODE SWITCHES

Basic Information

The system is operated by the ICC switch and four control switches, all mounted on the steering wheel.

1. **CANCEL switch:**

   Deactivates the system.

2. **ACCEL/RES switch:**

   Resumes set speed or increases speed incrementally.

3. **COAST/SET switch:**

   Sets desired cruise speed or reduces speed incrementally.

4. **ICC switch:**

   Master switch to activate the system.

5. **DISTANCE switch:**

   switch:

   Changes the vehicle's following distance:
   - Long
   - Middle
   - Short

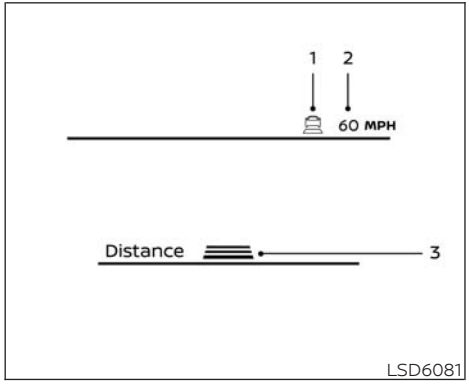

LSD6081

Vehicle-to-vehicle distance control mode display and indicators

The display is located between the speedometer and tachometer.

1. This indicator indicates the ICC system status depending on a color:
   - **ICC system ON indicator (gray):** Indicates that the ICC switch is on.
   - **ICC system SET indicator (green):** Indicates that the cruising speed is set.
   - **ICC system warning (yellow):** Indicates that there is a malfunction in the ICC system.
2. Set vehicle speed indicator:

   Indicates the set vehicle speed.

   For Canadian models, the speed is displayed in km/h.
3. Set distance indicator:

   Displays the selected distance between vehicles set with the distance switch.

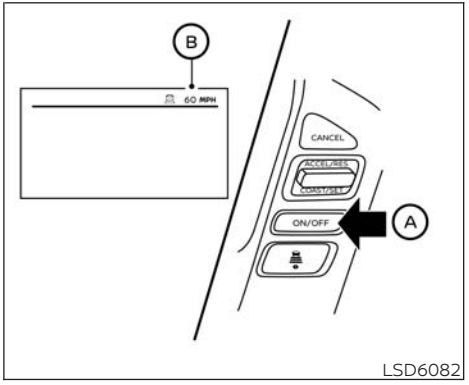

LSD6082

Operating vehicle-to-vehicle distance control mode

To turn on the cruise control, quickly push and release the ICC switch Ⓐ. The ICC system ON indicator (gray), set distance indicator and set vehicle speed indicator Ⓑ come on in a standby state for setting.

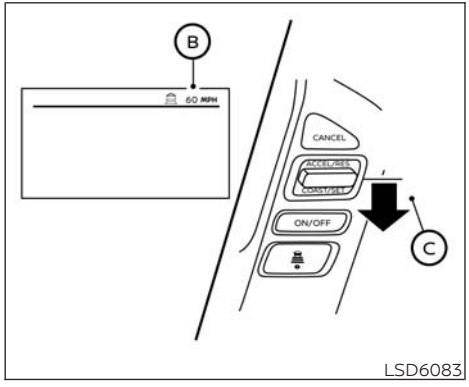

To set cruising speed, accelerate your vehicle to the desired speed, push the COAST/SET switch Ⓒ and release it. The ICC system set indicator (green), vehicle ahead detection indicator, set distance indicator and set vehicle speed indicator Ⓑ will come on. Take your foot off the accelerator pedal. Your vehicle will maintain the set speed.

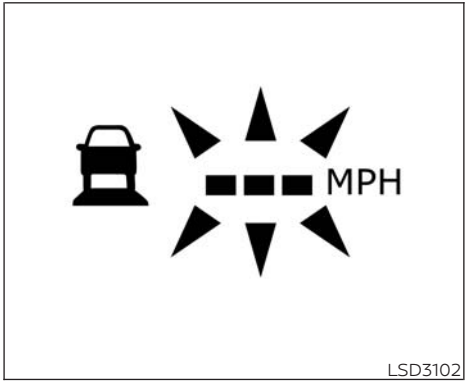

When the COAST/SET switch is pushed under the following conditions, the system cannot be set and the set vehicle speed indicator will blink for approximately 2 seconds:

- When traveling below 20 mph (30 km/h) and a vehicle ahead is not detected
- When the shift lever is not in the D (Drive) or Manual mode
- When the parking brake is applied
- When the brakes are operated by the driver

When the COAST/SET switch is pushed under the following conditions, the system cannot be set.

A warning message will pop up:

- When the VDC system is off (To use the ICC system, turn on the VDC system. Push the ICC switch to turn off the ICC system and reset the ICC switch by pushing the ICC switch again.)

  For additional information about the VDC system, see "Vehicle Dynamic Control (VDC) system" (P. 387).
- When VDC is operating
- When a wheel is slipping (To use the ICC system, make sure the wheels are no longer slipping.)

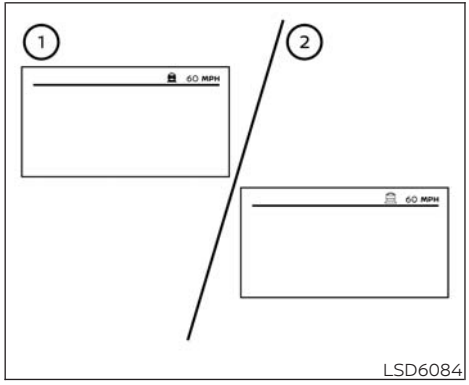

① System set display with vehicle ahead

② System set display without vehicle ahead

The driver sets the desired vehicle speed based on the road conditions. The ICC system maintains the set vehicle speed, similar to standard cruise control, as long as no vehicle is detected in the lane ahead. The ICC system displays the set speed.

Vehicle detected ahead

When a vehicle is detected in the lane ahead, the ICC system decelerates the vehicle by controlling the throttle and applying the brakes to match the speed of a slower vehicle ahead. The system then controls the vehicle speed based on the speed of the vehicle ahead to maintain the driver selected distance.

NOTE:

- **The stop lights of the vehicle come on when braking is performed by the ICC system.**
- **When the brake operates, a noise may be heard. This is not a malfunction.**

When a vehicle ahead is detected, the vehicle ahead detection indicator comes on. The ICC system will also display the set speed and selected distance.

Vehicle ahead not detected

When a vehicle is no longer detected ahead, the ICC system gradually accelerates your vehicle to resume the previously set vehicle speed. The ICC system then maintains the set speed.

When a vehicle is no longer detected, the vehicle ahead detection indicator turns off.

If a vehicle ahead appears during acceleration to the set vehicle speed or any time the ICC system is in operation, the system controls the distance to that vehicle.

When a vehicle is no longer detected under approximately 15 mph (25 km/h), the system will be canceled.

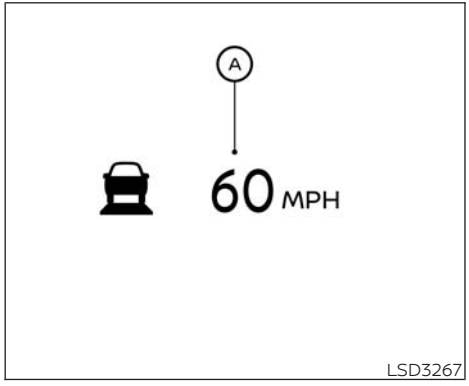

When passing another vehicle, the set speed indicator Ⓐ will flash when the vehicle speed exceeds the set speed. The vehicle detect indicator will turn off when the area ahead of the vehicle is open. When the pedal is released, the vehicle will return to the previously set speed.

Even though your vehicle speed is set in the ICC system, you can depress the accelerator pedal when it is necessary to accelerate your vehicle rapidly.

How to change the set vehicle speed

To cancel the preset speed, use one of the following methods:

- Push the CANCEL switch. The set vehicle speed indicator will turn gray.
- Tap the brake pedal. The set vehicle speed indicator will turn gray.
- Push the ICC switch to off. The ICC indicators will go out.

To reset at a faster cruising speed, use one of the following methods:

- Depress the accelerator pedal. When the vehicle attains the desired speed, push and release the COAST/SET switch.
- Push and hold the ACCEL/RES switch. The set vehicle speed will increase by approximately 5 mph (5 km/h).
- Push, then quickly release the ACCEL/RES switch. Each time you do this, the set speed will increase by approximately 1 mph (1.6 km/h).

To reset at a slower cruising speed, use one of the following methods:

- Lightly tap the brake pedal. When the vehicle attains the desired speed, push the COAST/SET switch and release it.
- Push and hold the COAST/SET switch. The set vehicle speed will decrease by approximately 5 mph (5 km/h).
- Push, then quickly release the COAST/SET switch. Each time you do this, the set speed will decrease by approximately 1 mph (1.6 km/h).

To resume the preset speed, push and release the ACCEL/RES switch. The vehicle will resume the last set cruising speed when the vehicle speed is over 20 mph (30 km/h).

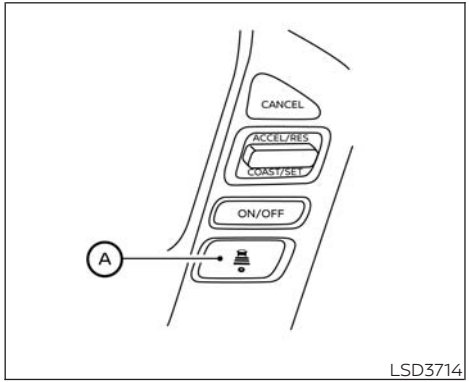

LSD3714

How to change the set distance to the vehicle ahead

The distance to the vehicle ahead can be selected at the time of the ICC Standby or the ICC is active depending on the traffic conditions.

Each time the distance switch Ⓐ is pushed, the set distance will change to long, middle, short and back to long again, in that sequence.

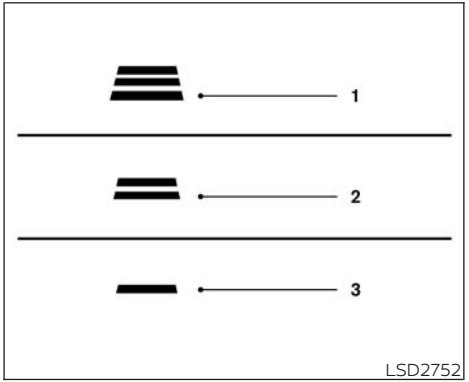

LSD2752

	Distance	Approximate distance at 60 mph (100 km/h) [ft (m)]
1.	Long	200 (60)
2.	Middle	150 (45)
3.	Short	90 (30)

- The distance to the vehicle ahead will change according to the vehicle speed. The higher the vehicle speed, the longer the distance.
- The distance setting will remain at the current setting even if the engine is restarted.

Approach warning

If your vehicle comes closer to the vehicle ahead due to rapid deceleration of that vehicle or if another vehicle cuts in, the system warns the driver with the chime and ICC system display. Decelerate by depressing the brake pedal to maintain a safe vehicle distance if:

- The chime sounds.
- The vehicle ahead detection indicator blinks.

The warning chime may not sound in some cases when there is a short distance between vehicles. Some examples are:

- When the vehicles are traveling at the same speed and the distance between vehicles is not changing.
- When the vehicle ahead is traveling faster and the distance between vehicles is increasing.
- When a vehicle cuts in near your vehicle.

The warning chime will not sound when:

- The vehicle approaches other vehicles that are parked or moving slowly.
- The accelerator pedal is depressed, overriding the system.

NOTE:

The approach warning chime may sound and the system display may blink when the ICC sensor detects objects on the side of the vehicle or on the side of the road. This may cause the ICC system to decelerate or accelerate the vehicle. The ICC sensor may detect these objects when the vehicle is driven on winding roads, narrow roads, hilly roads, or when entering or exiting a curve. In these cases you will have to manually control the proper distance ahead of your vehicle.

Also, the sensor sensitivity can be affected by vehicle operation (steering maneuver or driving position in the lane) or traffic or vehicle condition (for example, if a vehicle is being driven with some damage).

Automatic cancellation

A chime sounds under the following conditions and the control is automatically canceled:

- When the vehicle ahead is not detected and your vehicle is traveling below the speed of 15 mph (25 km/h)
- When the system judges the vehicle is at a standstill
- When the shift lever is not in the D (Drive) position, Manual mode or L (Low) range.
- When the parking brake system is applied
- When the VDC system is turned off
- When VDC operates
- When distance measurement becomes impaired due to adhesion of dirt or obstruction to the sensor
- When a wheel slips
- When the radar signal is temporarily interrupted

VEHICLE-TO-VEHICLE DISTANCE CONTROL MODE LIMITATIONS

⚠WARNING

Listed below are the system limitations for the ICC system. Failure to operate the vehicle in accordance with these system limitations could result in serious injury or death.

- **The ICC system is primarily intended for use on straight, dry, open roads with light traffic. It is not advisable to use the ICC system in city traffic or congested areas.**
- **The ICC system will not adapt automatically to road conditions. This system should be used in evenly flowing traffic. Do not use the system on roads with sharp curves, or on icy roads, in heavy rain or in fog.**
- **As there is a performance limit to the distance control function, never rely solely on the ICC system. This system does not correct careless, inattentive or absentminded driving, or overcome poor visibility in rain, fog, or other bad weather. Decelerate the vehicle speed by depressing the brake pedal, depending on the distance to the vehicle ahead and the surrounding circumstances in order to maintain a safe distance between vehicles.**
- **If the vehicle ahead comes to a stop, the vehicle decelerates to a standstill within the limitations of the system. The system will cancel once it judges that the vehicle has come to a standstill and sound a warning chime. To prevent the vehicle from moving, the driver must depress the brake pedal.**

- **Always pay attention to the operation of the vehicle and be ready to manually control the proper following distance. The ICC system may not be able to maintain the selected distance between vehicles (following distance) or selected vehicle speed under some circumstances.**
- **The system may not detect the vehicle in front of you in certain road or weather conditions. To avoid accidents, never use the ICC system under the following conditions:**
  - **On roads where the traffic is heavy or there are sharp curves**
  - **On slippery road surfaces such as on ice or snow, etc.**
  - **During bad weather (rain, fog, snow, etc.)**
  - **Wheels or tires other than NISSAN recommended are used.**
  - **When rain, snow or dirt adhere to the bumper around the distance sensor**
  - **On steep downhill roads (the vehicle may go beyond the set vehicle speed and frequent braking may result in overheating the brakes)**
  - **On repeated uphill and downhill roads**
  - **When traffic conditions make it difficult to keep a proper distance between vehicles because of frequent acceleration or deceleration**
  - **Interference by other radar sources**
- **Do not use the ICC system if you are towing a trailer. The system may not detect a vehicle ahead.**
- **In some road or traffic conditions, a vehicle or object can unexpectedly come into the sensor detection zone and cause automatic braking. Always stay alert and avoid using the ICC system where not recommended in this warning section.**

The radar sensor will not detect the following objects:

- Stationary and slow moving vehicles
- Pedestrians or objects in the roadway
- Oncoming vehicles in the same lane
- Motorcycles traveling offset in the travel lane

The sensor generally detects the signals returned from the vehicle ahead. Therefore, if the sensor cannot detect the reflection from the vehicle ahead, the ICC system may not maintain the selected distance.

The following are some conditions in which the sensor cannot properly detect a vehicle ahead and the system may not operate properly:

- When snow or road spray from traveling vehicles reduces the sensor's detection.
- When your vehicle is towing a trailer, etc.
- When excessively heavy baggage is loaded in the rear seat or cargo area of your vehicle.

The ICC system is designed to automatically check the sensor's operation within the limitations of the system.

When the sensor is covered with dirt or is obstructed, the system will automatically be canceled. If the sensor is covered with ice, a transparent or translucent vinyl bag, etc., the ICC system may not detect them. In these instances, the vehicle-to-vehicle distance control mode may not cancel and may not be able to maintain the selected following distance from the vehicle ahead. Be sure to check and clean the sensor regularly.

The detection zone of the radar sensor is limited. A vehicle ahead must be in the detection zone for the vehicle-to-vehicle distance detection mode to maintain the selected distance from the vehicle ahead.

A vehicle ahead may move outside of the detection zone due to its position within the same lane of travel. Motorcycles may not be detected in the same lane ahead if they are traveling offset from the centerline of the lane. A vehicle that is entering the lane ahead may not be detected until the vehicle has completely moved into the lane.

If this occurs, the ICC system may warn you by blinking the system indicator and sounding the chime. The driver may have to manually control the proper distance away from vehicle traveling ahead.

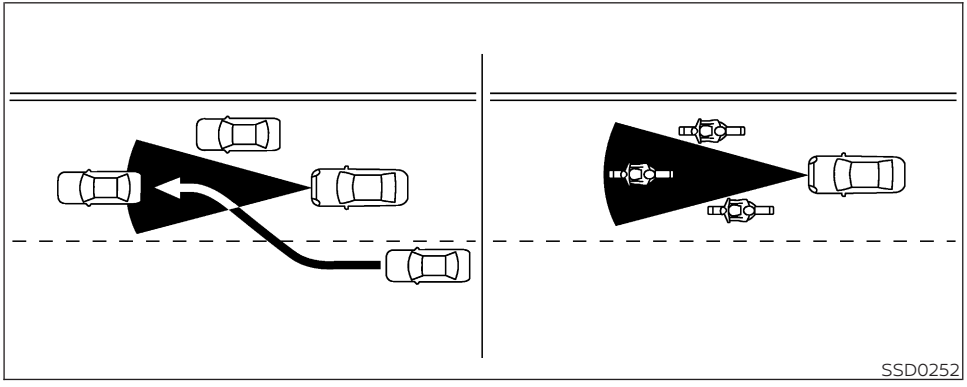

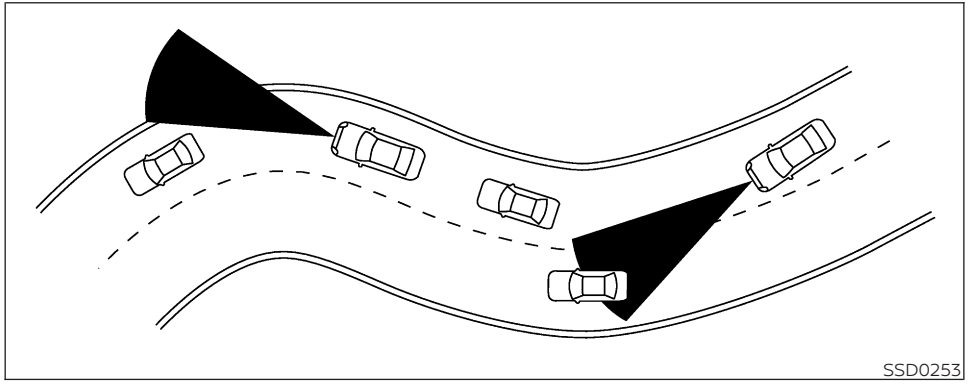

When driving on some roads, such as winding, hilly, curved, narrow roads, or roads which are under construction, the radar sensor may detect vehicles in a different lane, or may temporarily not detect a vehicle traveling ahead. This may cause the radar system to decelerate or accelerate the vehicle.

The detection of vehicles may also be affected by vehicle operation (steering maneuver or traveling position in the lane, etc.) or vehicle condition.

If this occurs, the ICC system may warn you by blinking the system indicator and sounding the chime unexpectedly. You will have to manually control the proper distance away from the vehicle traveling ahead.

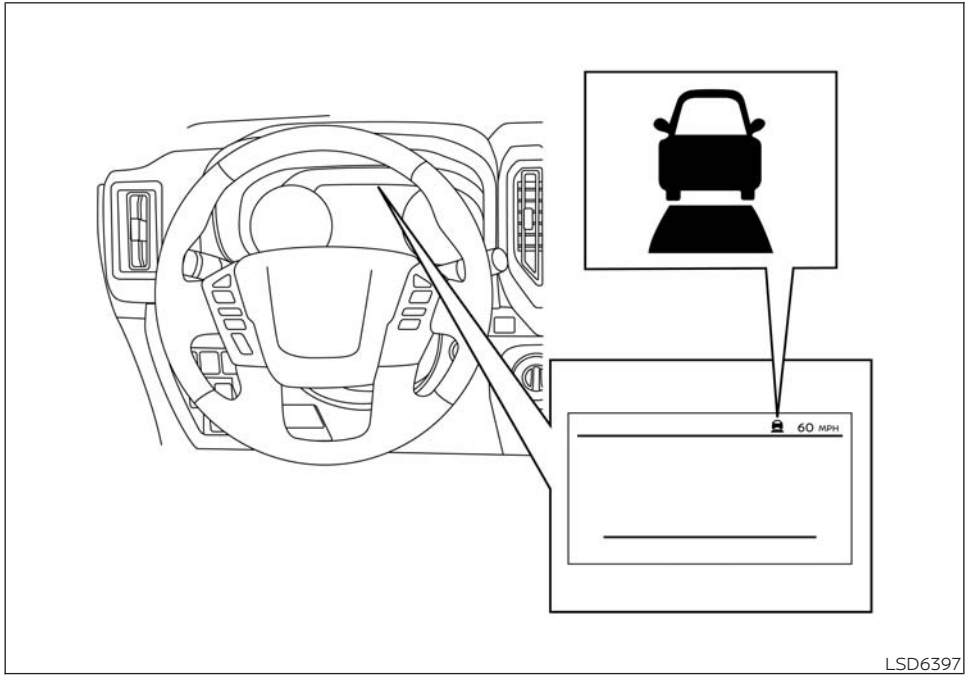

SYSTEM TEMPORARILY UNAVAILABLE

The following are conditions in which the ICC system may be temporarily unavailable. In these instances, the ICC system may not cancel and may not be able to maintain the selected following distance from the vehicle ahead.

Condition A

Under the following conditions, the ICC system is automatically canceled. A chime will sound and the system will not be able to be set:

- When the VDC system is turned off
- When the VDC operates
- When a vehicle ahead is not detected and your vehicle is traveling below the speed of 15 mph (25 km/h)
- When the system judges the vehicle is at a standstill
- When the shift lever is not in the D (Drive), Manual mode or L (Low) range
- When the parking brake is applied
- When a wheel slips
- When the radar signal is temporarily interrupted

Action to take

When the conditions listed above are no longer present, turn the system off using the ICC switch. Turn the ICC system back on to use the system.

Condition B

When there is inclement weather (rain, fog, snow, etc.) blocking the front radar sensor, the ICC system will automatically be canceled. The chime will sound and the "Forward Driving Aids Temporarily Disabled Front Sensor Blocked See Owner's Manual" warning message will appear in the vehicle information display.

Action to take

When the conditions listed above are no longer present, the warning message will no longer be available in the vehicle information display and the system will operate normally. If the "Forward Driving Aids Temporarily Disabled Front Sensor Blocked See Owner's Manual" warning message continues to be displayed, have the system checked. It is recommended that you visit a NISSAN dealer for this service.

Condition C

When the radar sensor area of the front bumper/emblem is covered with mud, dirt, snow, ice, etc., or is obstructed, the ICC system will automatically be canceled.

The chime will sound and the "Forward Driving Aids Temporarily Disabled Front Sensor Blocked See Owner's Manual" warning message will appear in the vehicle information display.

Action to take

If the warning message appears, stop the vehicle in a safe place, place the shift lever in the P (Park) position, and turn the engine off. When the radar signal is temporarily interrupted, clean the sensor area of the front bumper/emblem and restart the engine. If the "Forward Driving Aids Temporarily Disabled Front Sensor Blocked See Owner's Manual" warning message continues to be displayed, have the system checked. It is recommended that you visit a NISSAN dealer for this service.

Condition D

When driving on roads with limited road structures (for example, long bridges, deserts, snow fields, driving next to long walls), the system may illuminate the system warning light and display the ""Forward Driving Aids Temporarily Disabled Front Sensor Blocked See Owner's Manual" message and a chime will sound.

Action to take

When the above driving conditions no longer exist, turn the system back on.

Condition E

When the ICC system is not operating properly, a chime sounds, the ICC system warning light (orange) will come on and the "Forward Driving Aids Temporarily Disabled Front Sensor Blocked See Owner's Manual" warning message appears.

Action to take

If the warning light comes on, park the vehicle in a safe place. Turn the engine off, restart the engine, resume driving and set the ICC system again.

If it is not possible to set the system or the indicator stays on, it may indicate that the system is malfunctioning. Although the vehicle is still drivable under normal conditions, have the vehicle checked. It is recommended that you visit a NISSAN dealer for this service.

NOTE:

If the ICC system is temporarily unavailable, the conventional cruise control mode may still be used.
For instruction on using the Conventional Cruise Control mode see (P. 338).

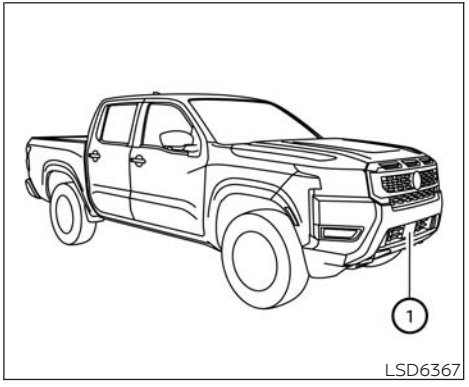

SYSTEM MAINTENANCE

Basic Information

The sensor for the ICC system ① is located on the front of the vehicle.

To keep the ICC system operating properly, be sure to observe the following:

- Always keep the sensor area of the front bumper/emblem clean.
- Do not strike or damage the areas around the sensor.

- Do not attach a sticker (including transparent material) or install an accessory near the sensor. This could cause failure or malfunction.
- Do not attach metallic objects near the sensor area (brush guard, etc.). This could cause failure or malfunction.
- Do not alter, remove, or paint the front bumper. Before customizing or restoring the front bumper, it is recommended that you visit a NISSAN dealer.

Radio frequency statement

FCC Notice

USA

This device complies with Part 15 of the FCC Rules with Industry Canada licence-exempt RSS standard(s).

Operation is subject to the following two conditions:

1. **This device may not cause harmful interference, and**
2. **This device must accept any interference received, including interference that may cause undesired operation.**

Le présent appareil est conforme aux CNR d'Industrie Canada applicables aux appareils radio exempts de licence. L'exploitation est autorisée aux deux conditions suivantes:

1. **l'appareil ne doit pas produire de brouillage, et**
2. **l'utilisateur de l'appareil doit accepter tout brouillage radioélectrique subi, même si le brouillage est susceptible d'en compromettre le fonctionnement.**

Radio frequency radiation exposure Information:

This equipment complies with FCC and IC radiation exposure limits set forth for an uncontrolled environment.

This equipment should be installed and operated with minimum distance of 30 cm between the radiator and your body.

This transmitter must not be co-located or operating in conjunction with any other antenna or transmitter.

Cet équipement est conforme aux limites d'exposition aux rayonnements IC établies pour un environnement non contrôlé. Cet équipement doit être installé et utillisé avec un minimum de 30 cm de distance entre la source de rayonnement et votre corps.

FCC Notice

Changes or modifications not expressly approved by the party responsible for compliance could void the user's authority to operate the equipment.

CANADA

This device complies with Part 15 of the FCC Rules and Industry Canada licence-exempt RSS standard(s).

Operation is subject to the following two conditions:

1. **This device may not cause harmful interference, and**
2. **This device must accept any interference received, including interference that may cause undesired operation.**

Radio frequency radiation exposure Information:

This equipment complies with FCC and IC radiation exposure limits set forth for an uncontrolled environment.

This equipment should be installed and operated with minimum distance of 30 cm between the radiator and your body.

This transmitter must not be co-located or operating in conjunction with any other antenna or transmitter.

Cet équipement est conforme aux limites d'exposition aux rayonnements IC établies pour un environnement non contrôlé. Cet équipement doit être installé et utillisé avec un minimum de 30 cm de distance entre la source de rayonnement et votre corps.

FCC Notice

Changes or modifications not expressly approved by the party responsible for compliance could void the user's authority to operate the equipment.

CONVENTIONAL (fixed speed) CRUISE CONTROL MODE

Basic Information

This mode allows driving at a speed between 25 to 90 mph (40 to 144 km/h) without keeping your foot on the accelerator pedal.

⚠WARNING

- **In the conventional (fixed speed) cruise control mode, a warning chime does not sound to warn you if you are too close to the vehicle ahead, as neither the presence of the vehicle ahead nor the vehicle-to-vehicle distance is detected.**
- **Pay special attention to the distance between your vehicle and the vehicle ahead of you or a collision could occur.**
- **Always confirm the setting in the ICC system display.**
- **Do not use the conventional (fixed speed) cruise control mode when driving under the following conditions:**
  - **When it is not possible to keep the vehicle at a set speed**
  - **In heavy traffic or in traffic that varies in speed**
  - **On winding or hilly roads**
  - **On slippery roads (rain, snow, ice, etc.)**
  - **In very windy areas**
- **Doing so could cause a loss of vehicle control and result in an accident.**

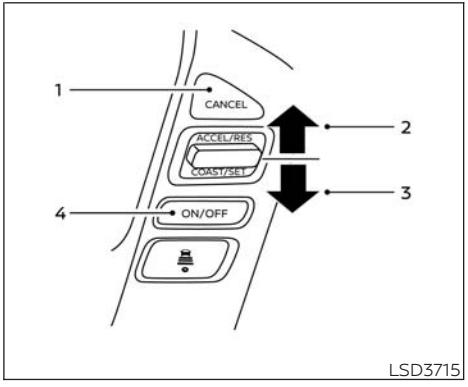

Conventional (fixed speed) cruise control switches

1. CANCEL switch:
   Deactivates the system
2. ACCEL/RES switch:
   Resumes set speed or increases speed incrementally
3. COAST/SET switch:
   Sets desired cruise speed or reduces speed incrementally
4. ICC switch:
   Master switch to activate the system

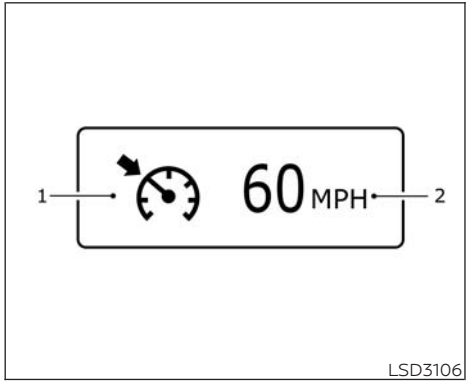

Conventional (fixed speed) cruise control mode display and indicators

The display is located in the vehicle information display.

1. Cruise indicator:
   This indicator indicates the condition of the ICC system depending on a color.
   - Cruise control ON indicator (gray): Indicates that the ICC switch is on
   - Cruise control SET indicator (green): Indicates that the cruising speed is set
   - Cruise control warning (yellow): Indicates that there is a malfunction in the ICC system
2. Set vehicle speed indicator:
   This indicator indicates the set vehicle speed. For Canadian models, the speed is displayed in km/h.

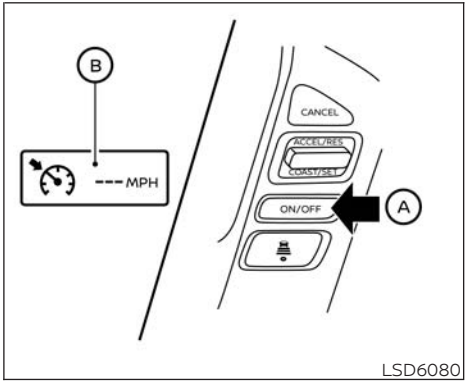

Operating conventional (fixed speed) cruise control mode

To turn on the conventional (fixed speed) cruise control mode, push and hold the ICC switch Ⓐ for longer than about 1.5 seconds.

When you push and hold the ICC switch on, the ICC indicator appears and then turns off and then the conventional (fixed speed) cruise control mode display and indicators Ⓑ are displayed in the vehicle information display. You can now set your desired cruising speed. Pushing the ICC switch again will turn the system completely off. When the

ignition switch is placed in the OFF position, the system is also automatically turned off.

To use the ICC system again, quickly push and release the ICC switch (vehicle-to vehicle distance control mode) or push and hold it (conventional cruise control mode) again to turn it on.

⚠CAUTION

To avoid accidentally engaging cruise control, make sure to turn the ICC switch off when not using the ICC system.

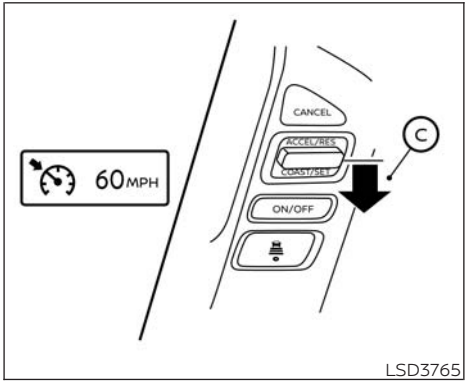

To set cruising speed, accelerate your vehicle to the desired speed, push the COAST/SET Ⓒ switch and release it. (The color of the cruise indicator changes to green and set vehicle speed indicator comes on.) Take your foot off the accelerator pedal. Your vehicle will maintain the set speed.

- To pass another vehicle, depress the accelerator pedal. When you release the pedal, the vehicle will return to the previously set speed.
- The vehicle may not maintain the set speed when going up or down steep hills. If this happens, manually maintain vehicle speed.

To cancel the preset speed, use any of the following methods:

1. Push the CANCEL switch. The vehicle speed indicator will turn off.
2. Tap the brake pedal. The vehicle speed indicator will turn off.
3. Turn the ICC switch off. Both the cruise indicator and vehicle speed indicator will turn off.

To reset at a faster cruising speed, use one of the following three methods:

1. Depress the accelerator pedal. When the vehicle attains the desired speed, push and release the COAST/SET switch.
2. Push and hold the ACCEL/RES switch. When the vehicle attains the desired speed, release the switch.
3. Push, then quickly release the ACCEL/RES switch. Each time you do this, the set speed will increase by about 1 mph (1.6 km/h).

To reset at a slower cruising speed, use one of the following three methods:

1. Lightly tap the brake pedal. When the vehicle attains the desired speed, push the COAST/SET switch and release it.
2. Push and hold the COAST/SET switch. Release the switch when the vehicle slows down to the desired speed.
3. Push, then quickly release the COAST/SET switch. Each time you do this, the set speed will decrease by about 1 mph (1.6 km/h).

To resume the preset speed, push and release the ACCEL/RES switch. The vehicle will resume the last set cruising speed when the vehicle speed is over 25 mph (40 km/h).

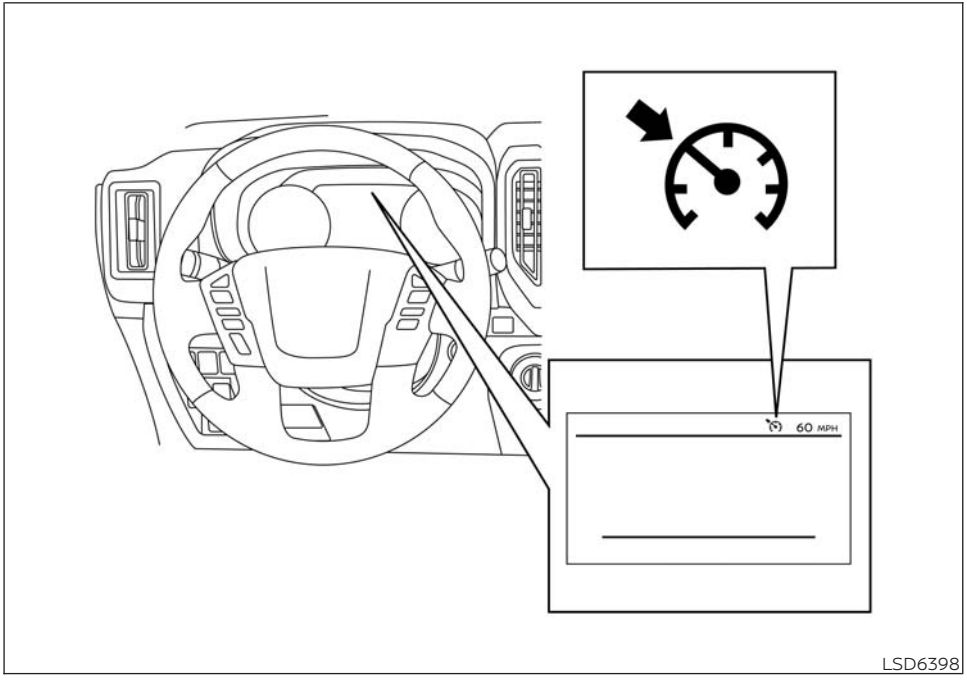

System temporarily disabled

A chime sounds under the following conditions and the control is automatically canceled:

- When the vehicle slows down more than 8 mph (13 km/h) below the set speed
- When the shift lever is not in the D (Drive) or manual shift mode
- When the parking brake is applied
- When the VDC operates (including the traction control system)
- When a wheel slips

When the system is not operating properly, the chime sounds and the color of the cruise indicator will change to orange.

Action to take

If the color of the cruise indicator changes to orange, stop the vehicle in a safe place and place the shift lever in the P (Park) position. Turn the engine off, restart the engine, resume driving, and then perform the setting again.

If it is not possible to set or the indicator stays on, it may indicate that the system is malfunctioning. Although the vehicle is still drivable under normal conditions, have the vehicle checked. It is recommended that you visit a NISSAN dealer for this service.

BASIC INFORMATION

⚠WARNING

Failure to follow the warnings and instructions for proper use of the RAB system could result in serious injury or death.

- **The RAB system is a supplemental aid to the driver. It is not a replacement for proper driving procedures. Always use the side and rear mirrors and turn and look in the direction you will move before and while backing up. Never rely solely on the RAB system. It is the driver's responsibility to stay alert, drive safely, and be in control of the vehicle at all times.**
- **There is a limitation to the RAB system capability. The RAB system is not effective in all situations.**
- **Inclement weather or ultrasonic sources such as an automatic car wash, a truck's compressed-air brakes or a pneumatic drill may affect the function of the system; this may include reduced performance or a false activation.**

The RAB system can assist the driver when the vehicle is backing up and approaching objects directly behind the vehicle.

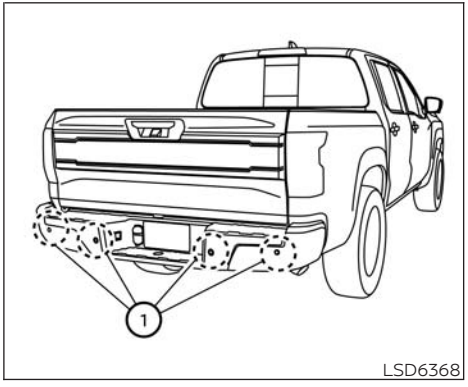

LSD6368

The RAB system detects obstacles behind the vehicle using the parking sensors ① located on the rear bumper.

NOTE:

You can temporarily cancel the sonar function in the vehicle, but the RAB system will continue to operate. For additional information, see "Rear Sonar System (RSS)" (P. 391).

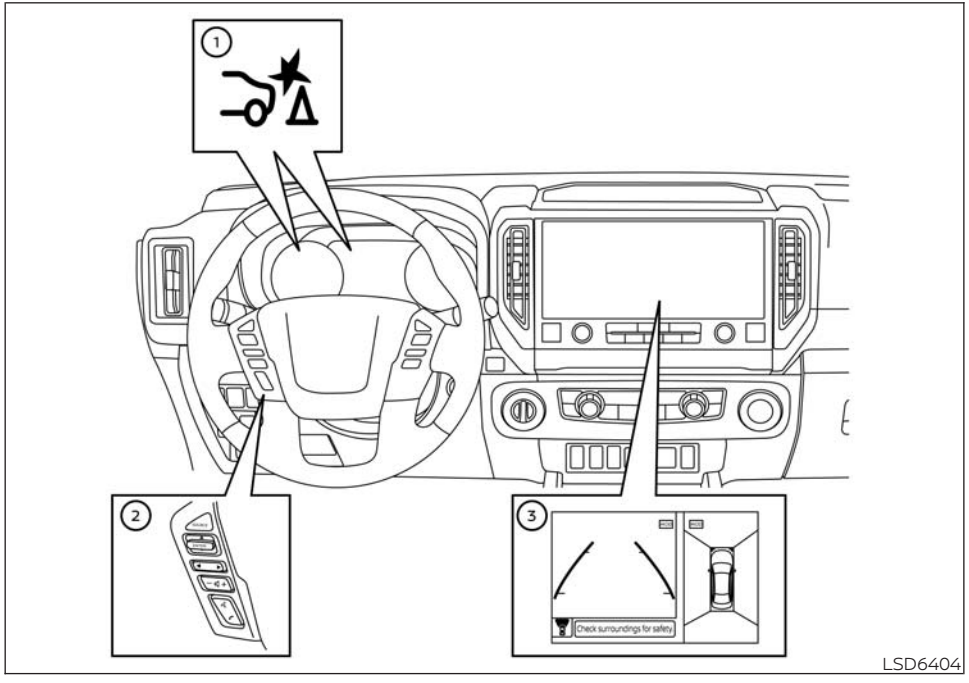

RAB SYSTEM OPERATION

Basic Information

① RAB system warning light and RAB system indicator

② Steering-wheel-mounted controls (left side)

③ Center display

When the shift lever is in the R (Reverse) position and the vehicle speed is less than approximately 9 mph (15 km/h), the RAB system operates.

If a risk of a collision with an obstacle is detected when your vehicle is backing up, the RAB system warning indicator will flash in the vehicle information display, a red frame will appear in the center display (for vehicles with the Intelligent Around View® Monitor system), and the system will chime three times. The system will then automatically apply the brakes. After the automatic brake application, the driver must depress the brake pedal to maintain brake pressure.

NOTE:

- **The brake lights of the vehicle come on when braking is performed by the RAB system.**
- **When the brakes operate, a noise may be heard. This is not a malfunction.**

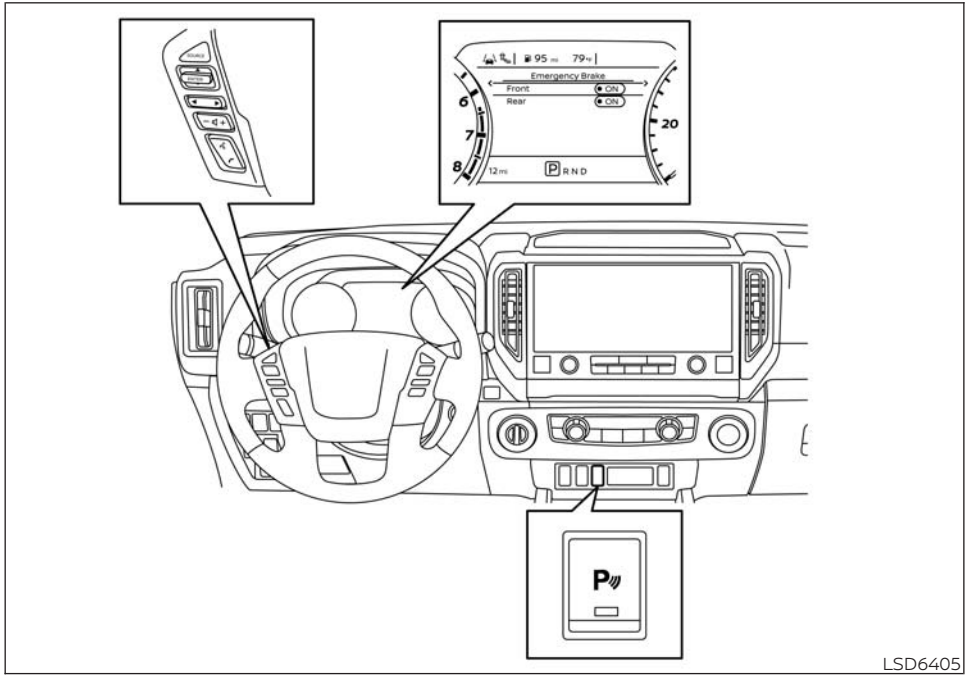

Turning the RAB system on/off

Perform the following steps to turn the RAB system on or off.

1. Press the ◀ ▶ button until "Settings" displays in the vehicle information display and then press the ENTER button. Use the ▲▼ button to select "Driver Assistance." Then press the ENTER button.
2. Select "Emergency Brake" and press the ENTER button.
3. Select "Rear" and press the ENTER button to turn the system on or off.
4. Push the Parking Aids system switch to turn the system on or off.

When the RAB system is turned off, the RAB system warning light illuminates.

NOTE:

The RAB system will be automatically turned on when the engine is restarted.

RAB SYSTEM LIMITATIONS

⚠ WARNING

Listed below are the system limitations for the RAB system. Failure to follow the warnings and instructions for proper use of the RAB system could result in serious injury or death.

- **When the vehicle approaches an obstacle while the accelerator or brake pedal is depressed, the function may not operate or the start of operation may be delayed. The RAB system may not operate or may not perform sufficiently due to vehicle conditions, driving conditions, the traffic environment, the weather, road surface conditions, etc. Do not wait for the system to operate. Operate the brake pedal by yourself as soon as necessary.**
- **If it is necessary to override RAB operation, strongly press the accelerator pedal.**
- **Always check your surroundings and turn to check what is behind you before and while backing up. The RAB system detects stationary objects behind the vehicle. The RAB system does not detect the following objects:**
  - **Moving objects**
  - **Low objects**
  - **Narrow objects**
  - **Wedge-shaped objects**
  - **Objects close to the bumper (less than approximately 1 ft [30 cm])**
  - **Objects that suddenly appear**
  - **Thin objects such as rope, wire, chain, etc.**
- **The RAB system may not operate for the following obstacles:**
  - **Obstacles located high off the ground**
  - **Obstacles in a position offset from your vehicle**
  - **Obstacles, such as spongy materials or snow, that have soft outer surfaces and can easily absorb a sound wave**
- **The RAB system may not operate in the following conditions:**
  - **There is rain, snow, ice, dirt, etc., attached to the sonar sensors.**
  - **A loud sound is heard in the area around the vehicle.**
  - **The surface of the obstacle is diagonal to the rear of the vehicle.**
- **The RAB system may unintentionally operate in the following conditions:**
  - **There is overgrown grass in the area around the vehicle.**
  - **There is a structure (e.g., a wall, toll gate equipment, a narrow tunnel, a parking lot gate) near the side of the vehicle.**
  - **There are bumps, protrusions, or manhole covers on the road surface.**
  - **The vehicle drives through a draped flag or a curtain.**
  - **There is an accumulation of snow or ice behind the vehicle.**
  - **An ultrasonic wave source, such as another vehicle's sonar, is near the vehicle.**
- **Once the automatic brake control operates, it does not operate again if the vehicle approaches the same obstacle.**
- **The automatic brake control can only operate for a short period of time. Therefore, the driver must depress the brake pedal.**

- **In the following situations, the RAB system may not operate properly or may not function sufficiently:**
  - **The vehicle is driven in bad weather (rain, fog, snow, etc.).**
  - **The vehicle is driven on a steep hill.**
  - **The vehicle's posture is changed (e.g., when driving over a bump).**
  - **The vehicle is driven on a slippery road.**
  - **The vehicle is turned sharply by turning the steering wheel fully.**
  - **Snow chains are used.**
  - **Wheels or tires other than NISSAN recommended are used.**
  - **The brakes are cold at low ambient temperatures or immediately after driving has started.**
  - **The braking force becomes poor due to wet brakes after driving through a puddle or washing the vehicle.**
- **Turn the RAB system off in the following conditions to prevent the occurrence of an unexpected accident resulting from sudden system operation:**
  - **The vehicle is towed.**
  - **The vehicle is carried on a flatbed truck.**
  - **The vehicle is on the chassis dynamometer.**
  - **The vehicle drives on an uneven road surface.**
  - **The vehicle is towing an object (if so equipped).**
  - **Suspension parts other than those designated as Genuine NISSAN parts are used. (If the vehicle height or the vehicle body inclination is changed, the system may not detect an obstacle correctly.)**
  - **If the vehicle is using an accessory like a bike rack, or cargo carrier that blocks the sensors.**
- **Excessive noise (e.g., audio system volume, an open vehicle window) will interfere with the chime sound, and it may not be heard.**

SYSTEM MALFUNCTION

If the RAB system malfunctions, it will be turned off automatically, and the RAB system warning light will illuminate and the warning message "System fault See Owner's Manual" in the vehicle information display.

Action to take

If the warning light illuminates, park the vehicle in a safe location, turn the engine off, and restart the engine. If the warning light continues to illuminate, have the RAB system checked. It is recommended that you visit a NISSAN dealer for this service.

NOTE:

If the RAB system cannot be operated temporarily, the RAB system warning light blinks.

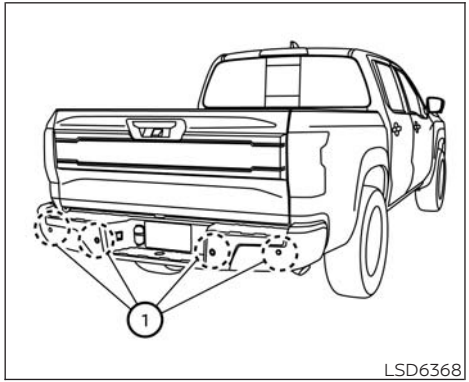

SYSTEM MAINTENANCE

Observe the following items to ensure proper operation of the system:

- Always keep the parking sensors ① clean.
- If the parking sensors are dirty, wipe them off with a soft cloth while being careful to not damage them.
- Do not subject the area around the parking sensors ① to strong impact. Also, do not remove or disassemble the parking sensors. If the parking sensors and peripheral areas are deformed in an accident, etc., have the sensors checked. It is recommended that you visit a NISSAN dealer for this service.
- Do not install any stickers (including transparent stickers) or accessories on the parking sensors ① and their surrounding areas. This may cause a malfunction or improper operation.

BASIC INFORMATION

⚠ WARNING

Failure to follow the warnings and instructions for proper use of the AEB with Pedestrian Detection system could result in serious injury or death.

- **The AEB with Pedestrian Detection system is a supplemental aid to the driver. It is not a replacement for the driver's attention to traffic conditions or responsibility to drive safely. It cannot prevent accidents due to carelessness or dangerous driving techniques.**
- **The AEB with Pedestrian Detection system does not function in all driving, traffic, weather and road conditions.**

The AEB with Pedestrian Detection system can assist the driver when there is a risk of a forward collision with the vehicle ahead in the traveling lane or with a pedestrian ahead in the traveling lane.

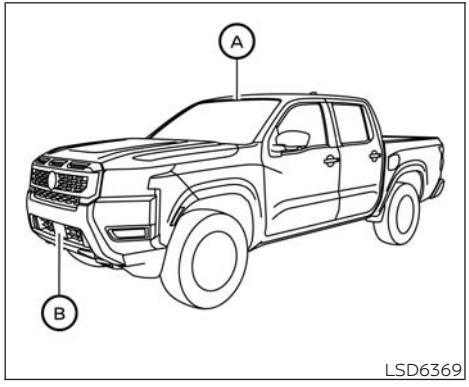

The AEB with Pedestrian Detection system uses a radar sensor located on the front of the vehicle Ⓑ to measure the distance to the vehicle ahead in the same lane. For pedestrians, the AEB with Pedestrian Detection system uses a camera installed behind the windshield Ⓐ in addition to the radar sensor.

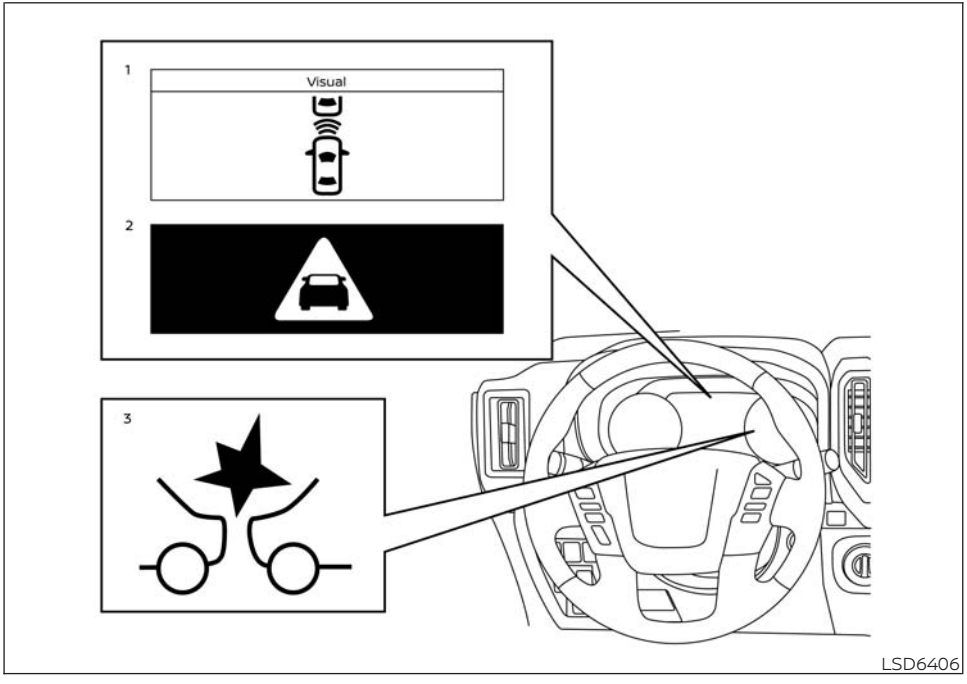

AEB WITH PEDESTRIAN DETECTION SYSTEM OPERATION

1. Vehicle ahead detection indicator
2. AEB with Pedestrian Detection emergency warning indicator

3. AEB with Pedestrian Detection system warning light

The AEB system operates at speeds above approximately 3 mph (5 km/h). For the pedestrian detection function, the system operates at speeds between 6 – 37 mph (10 – 60 km/h).

If a risk of a forward collision is detected, the AEB with Pedestrian Detection system will firstly provide the warning to the driver by flashing the vehicle ahead detection indicator (yellow) in the vehicle information display and providing an audible alert. If the driver applies the brakes quickly and forcefully after the warning, and the AEB with Pedestrian Detection system detects that there is still the possibility of a forward collision, the system will automatically increase the braking force.

If the driver does not take action, the AEB with Pedestrian Detection system issues the second visual (flashing) (red and white) and audible warning. If the driver releases the accelerator pedal, then the system applies partial braking. If the risk of a collision becomes imminent, the AEB with Pedestrian Detection system applies harder braking automatically.

While the AEB with Pedestrian Detection system is operating, you may hear the sound of brake operation. This is normal and indicates that the AEB with Pedestrian Detection system is operating properly.

NOTE:

The vehicle's brake lights come on when any braking is performed by the AEB with Pedestrian Detection system.

Depending on vehicle speed and distance to the vehicle or pedestrian ahead, as well as driving and roadway conditions, the system may help the driver avoid a forward collision or may help mitigate the consequences if a collision should be unavoidable. If the driver is handling the steering wheel, accelerating or braking, the AEB with Pedestrian Detection system will function later or will not function.

The automatic braking will cease under the following conditions:

- When the steering wheel is turned to avoid a collision.
- When the accelerator pedal is depressed.
- When there is no longer a vehicle or a pedestrian detected ahead.

If the AEB with Pedestrian Detection system has stopped the vehicle, the vehicle will remain at a standstill for approximately 2 seconds before the brakes are released.

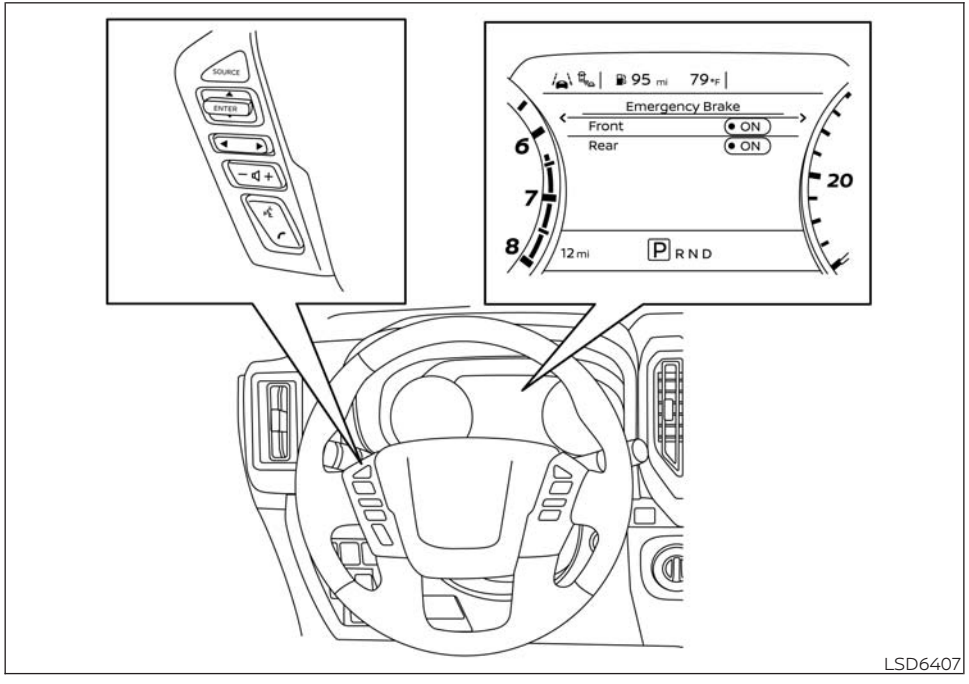

TURNING THE AEB WITH PEDESTRIAN DETECTION SYSTEM ON/OFF

Perform the following steps to enable or disable the AEB with Pedestrian Detection system.

1. Press the ◀ ▶ button until "Settings" displays in the vehicle information display. Use the ▲▼ button to select "Driver Assistance." Then press the ENTER button.
2. Select "Emergency Brake" and press the ENTER button.
3. Select "Front" and press the ENTER button to turn the system on or off.

When the AEB with Pedestrian Detection system is turned off, the AEB with Pedestrian Detection system warning light illuminates.

NOTE:

- **The AEB with Pedestrian Detection system will be automatically turned on when the engine is restarted.**
- **The I-FCW system is integrated into the AEB with Pedestrian Detection system. There is not a separate selection in the vehicle information display for the I-FCW system. When the AEB system is turned off, the I-FCW system is also turned off.**

AEB WITH PEDESTRIAN DETECTION SYSTEM LIMITATIONS

⚠ WARNING

Listed below are the system limitations for the AEB with Pedestrian Detection system. Failure to operate the vehicle in accordance with these system limitations could result in serious injury or death.

- **The AEB with Pedestrian Detection system cannot detect all vehicles or pedestrians under all conditions.**
- **The AEB with Pedestrian Detection system does not detect the following:**
  - **Pedestrians that are small (for example, children), in a sitting position, operating toys/skateboards, on scooters or in wheelchairs, or not in an upright standing or walking position.**
  - **Animals of any size.**
  - **Obstacles (for example, cargo or debris) on the roadway or roadside.**
  - **Oncoming or crossing vehicles.**
  - **Vehicles where the tires are difficult to see or the shape of the rear of the vehicle is unclear or obstructed.**
  - **Parked vehicles.**
- **The AEB with Pedestrian Detection system has some performance limitations.**
  - **If a stationary vehicle is in the vehicle's path, the system will not function when the vehicle approaches the stationary vehicle at speeds over approximately 50 mph (80 km/h).**
  - **Pedestrian detection will not function when the vehicle is driven at speeds over approximately 37 mph (60 km/h) or below approximately 6 mph (10km/h).**
- **The AEB with Pedestrian Detection system may not function properly or detect a vehicle or pedestrians ahead in the following conditions:**
  - **In poor visibility conditions (such as rain, snow, fog, dust storms, sand storms, smoke, and road spray from other vehicles).**
  - **If dirt, ice, snow, fog or other material is covering the radar sensor area or camera area of the windshield.**
  - **If strong light (for example, sunlight or high beams) enters the front camera or a sudden change in brightness occurs (for example, entering a tunnel or driving in lightning).**
  - **In dark or dimly lit conditions, such as at night or in tunnels, including cases where your vehicle's headlights are off or dim, or the tail lights of the vehicle ahead are off.**
  - **When the direction of the camera is misaligned.**
  - **When driving on a steep downhill slope, on roads with sharp curves, and/or bumpy or dirt roads.**
  - **If there is interference by other radar sources.**
  - **When your vehicle's position or movement is changed quickly or significantly (for example, lane change, turning vehicle, abrupt steering, sudden acceleration or deceleration).**

- Wheels or tires other than NISSAN recommended are used.
- When your vehicle or the vehicle or pedestrian ahead moves quickly or significantly such that the system cannot detect and react in time (for example, pedestrian moving quickly toward the vehicle at close range, vehicle cutting in, changing lanes, making a turn, steering abruptly, sudden acceleration or deceleration).
- When the vehicle or pedestrian is offset from the vehicle's forward path.
- If the speed difference between the two vehicles is small.
- The pedestrian's profile is partially obscured or unidentifiable; for example, due to transporting luggage, pushing a stroller, wearing bulky or very loose-fitting clothing or accessories, or being in a unique posture (such as raising hands).
- There is poor contrast of a person to the background, such as having clothing color or pattern which is similar to the background.
- For approximately 15 seconds after starting the engine.
- If the vehicle ahead has a unique or unusual shape, extremely low or high clearance heights, or unusual cargo loading or is narrow (for example, a motorcycle).
- When the vehicle or pedestrian is located near a traffic sign, a reflective area (for example, water on road), or is in a shadow.
- When multiple pedestrians are grouped together.
- When the view of the pedestrian is obscured by a vehicle or other object.
- While towing a trailer or other vehicle.

· The system performance may be degraded in the following conditions:
  - The vehicle is driven on a slippery road.
  - The vehicle is driven on a slope.
  - Excessively heavy baggage is loaded in the rear seat or the cargo area of your vehicle.

· The system is designed to automatically check the sensor's (radar and camera) functionality, within certain limitations. The system may not detect some forms of obstruction of the sensor area such as ice, snow or stickers, for example. In these cases, the system may not be able to warn the driver properly. Be sure that you check, clean and clear sensor areas regularly.

· In some road and traffic conditions, the AEB with Pedestrian Detection system may unexpectedly apply partial braking. When acceleration is necessary, depress the accelerator pedal to override the system.

· The AEB with Pedestrian Detection system may operate when a pattern, object, shadow or lights are detected that are similar to the outline of vehicles or pedestrians, or if they are the same size and position as a vehicle or motorcycle's tail lights.

· The system may keep operating when the vehicle ahead is turning right or left.

- **The system may operate when your vehicle is approaching and passing a vehicle ahead.**
- **Depending on the road shape (curved road, entrance and exit of the curve, winding road, lane regulation, under construction, etc.), the system may operate temporarily for the oncoming vehicle in front of your vehicle.**

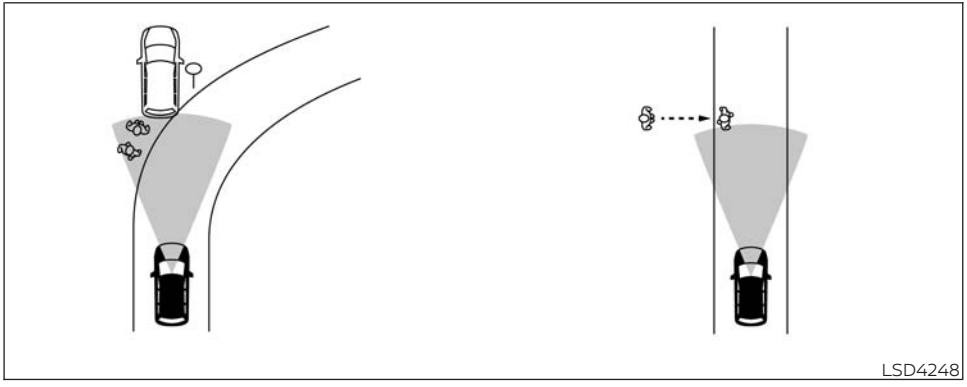

WARNING

Listed below are the system limitations for the AEB with Pedestrian Detection system. Failure to operate the vehicle in accordance with these system limitations could result in serious injury or death.

- **The AEB with Pedestrian Detection system may react to:**
  - **objects on the roadside (traffic sign, guardrail, pedestrian, motorcycle, vehicle, etc.)**
  - **pedestrians when driving on the narrow alleys, etc.**
  - **pedestrians who temporarily protrude into or approaching the driving lane to avoid the obstacles on the road shoulder**
  - **objects above road (low bridge, traffic sign, etc.)**
  - **objects on the road surface (railroad track, grate, steel plate, etc.)**
  - **objects in the parking garage (beam, pillar, etc.)**
  - **pedestrians or motorcycles approaching the travelling lane**

- vehicles, pedestrians, motorcycles or objects in adjacent lanes or close to the vehicle
- oncoming pedestrians
- objects on the road (such as trees)

· **Braking distances increase on slippery surfaces.**

· **Excessive noise will interfere with the warning chime sound, and the chime may not be heard.**

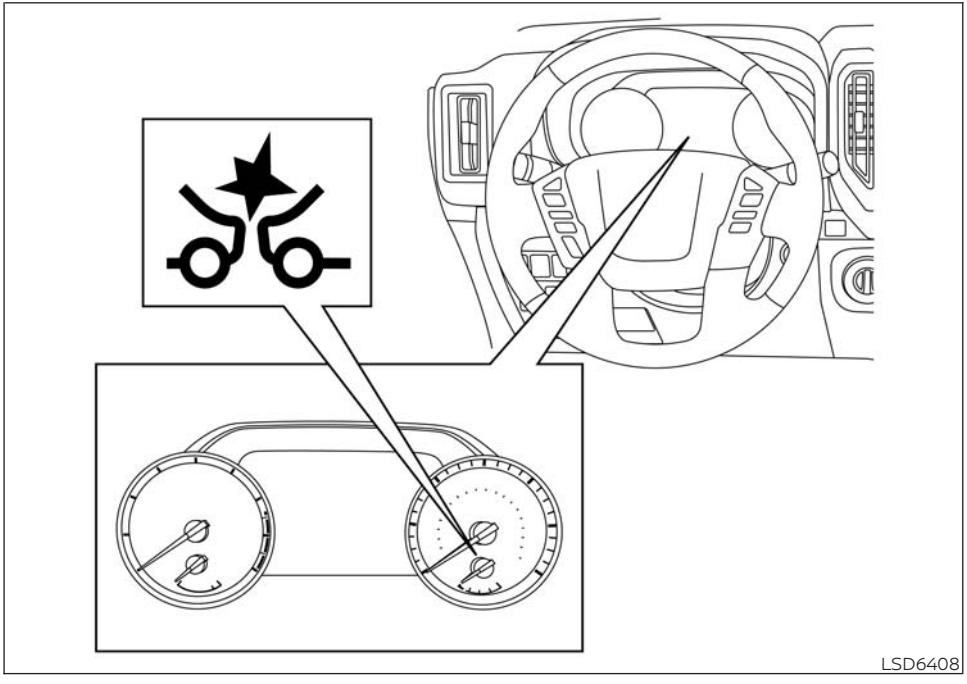

SYSTEM TEMPORARILY UNAVAILABLE

Condition A:

In the following conditions, the AEB with Pedestrian Detection system warning light blinks and the system will be turned off automatically:

- The camera area of the windshield is misted or frozen.
- Strong light is shining from the front.
- The cabin temperature is over approximately 104°F (40°C) in direct sunlight.
- The camera area of the windshield glass is continuously covered with dirt, etc.

Action to take:

When the above conditions no longer exist, the AEB with Pedestrian Detection system will resume automatically.

NOTE:

When the inside of the windshield on the camera area is misted or frozen, it will take a period of time to remove it after the A/C turns on. If dirt appears on this area, it is recommended that you visit a NISSAN dealer.

Condition B:

In the following condition, the AEB with Pedestrian Detection system warning light illuminates and the system will be turned off automatically:

- The radar sensor picks up interference from another radar source.

Action to take:

When the above condition no longer exists, the AEB with Pedestrian Detection system will resume automatically.

Condition C:

When there is inclement weather (rain, fog, snow, etc.) blocking the front radar sensor, the AEB with Pedestrian Detection system will be canceled, the AEB with Pedestrian Detection system warning light will illuminate and the "Forward Driving Aids Temporarily Disabled Front Sensor Blocked See Owner's Manual" warning message will appear in the vehicle information display.

Action to take:

When the conditions listed above are no longer present, the warning message will no longer be available in the vehicle information display. If the "Forward Driving Aids Temporarily Disabled Front Sensor Blocked See Owner's Manual" warning message continues to be displayed, have the system checked. It is recommended that you visit a NISSAN dealer for this service.

Condition D:

When the radar sensor of the front bumper is covered with dirt or is obstructed, the AEB with Pedestrian Detection system will automatically be canceled, the AEB with Pedestrian Detection system warning light will illuminate and the "Forward Driving Aids Temporarily Disabled Front Sensor Blocked See Owner's Manual" warning message will appear in the vehicle information display.

Action to take:

If the warning message appears, stop the vehicle in a safe place, place the shift lever in the P (Park) position, and turn the engine off. When the radar signal is temporarily interrupted, clean the sensor area of the front bumper and restart the engine. If the "Forward Driving Aids Temporarily Disabled Front Sensor Blocked See Owner's Manual" warning message continues to be displayed, have the system checked. It is recommended that you visit a NISSAN dealer for this service.

Condition E:

When driving on roads with limited road structures or buildings (for example, long bridges, deserts, snowfields, driving next to long walls), the system may illuminate the system warning light and display the "Forward Driving Aids Temporarily Disabled Front Sensor Blocked See Owner's Manual" message.

Action to take:

When the above driving conditions no longer exist, turn the system back on.

Condition F:

When the Vehicle Dynamic Control (VDC) system is off, the AEB with Pedestrian Detection brake will not operate. In this case only visible and audible warning operates. The AEB with Pedestrian Detection system warning light (orange) will illuminate.

Action to take:

When the VDC system is on, the AEB with Pedestrian Detection system will resume automatically.

NOTE:

If the AEB with Pedestrian Detection system stops working, the I-FCW system will also stop working.

SYSTEM MALFUNCTION

If the AEB with Pedestrian Detection system malfunctions, it will be turned off automatically, a chime will sound, the AEB with Pedestrian Detection system warning light (orange) will illuminate and the warning message "System fault See Owner's Manual" will appear in the vehicle information display.

Action to take

If the warning light (orange) comes on, stop the vehicle in a safe location, turn the engine off and restart the engine. If the warning light continues to illuminate, have the AEB with Pedestrian Detection system checked. It is recommended that you visit a NISSAN dealer for this service.

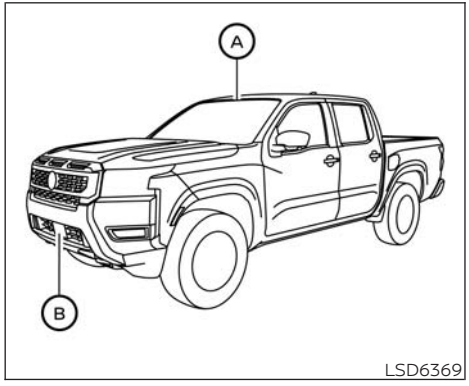

SYSTEM MAINTENANCE

Basic Information

The radar sensor is located on the front of the vehicle Ⓑ. The camera is located on the upper side of the windshield Ⓐ.

To keep the AEB with Pedestrian Detection system operating properly, be sure to observe the following:

- Always keep the sensor areas of the front bumper/emblem and windshield clean.
- Do not strike or damage the areas around the sensors (e.g., bumper, windshield).
- Do not cover or attach stickers, or install any accessory near the sensors. This could block sensor signals and/or cause failure or malfunction.
- Do not attach metallic objects near the radar sensor (brush guard, etc.). This could cause failure or malfunction.
- Do not place reflective materials, such as white paper or a mirror, on the instrument panel. The reflection of sunlight may adversely affect the camera unit's detection capability.
- Do not alter, remove or paint the front bumper. Before customizing or restoring the front bumper, it is recommended that you visit a NISSAN dealer.

Radio frequency statement

FCC Notice

USA

This device complies with Part 15 of the FCC Rules with Industry Canada licence-exempt RSS standard(s).

Operation is subject to the following two conditions:

1. **This device may not cause harmful interference, and**
2. **This device must accept any interference received, including interference that may cause undesired operation.**

Le présent appareil est conforme aux CNR d'Industrie Canada applicables aux appareils radio exempts de licence. L'exploitation est autorisée aux deux conditions suivantes:

1. **l'appareil ne doit pas produire de brouillage, et**
2. **l'utilisateur de l'appareil doit accepter tout brouillage radioélectrique subi, même si le brouillage est susceptible d'en compromettre le fonctionnement.**

Radio frequency radiation exposure Information:

This equipment complies with FCC and IC radiation exposure limits set forth for an uncontrolled environment.

This equipment should be installed and operated with minimum distance of 30 cm between the radiator and your body.

This transmitter must not be co-located or operating in conjunction with any other antenna or transmitter.

Cet équipement est conforme aux limites d'exposition aux rayonnements IC établies pour un environnement non contrôlé. Cet équipement doit être installé et utillisé avec un minimum de 30 cm de distance entre la source de rayonnement et votre corps.

FCC Notice

Changes or modifications not expressly approved by the party responsible for compliance could void the user's authority to operate the equipment.

CANADA

This device complies with Part 15 of the FCC Rules and Industry Canada licence-exempt RSS standard(s).

Operation is subject to the following two conditions:

1. **This device may not cause harmful interference, and**
2. **This device must accept any interference received, including interference that may cause undesired operation.**

Radio frequency radiation exposure Information:

This equipment complies with FCC and IC radiation exposure limits set forth for an uncontrolled environment.

This equipment should be installed and operated with minimum distance of 30 cm between the radiator and your body.

This transmitter must not be co-located or operating in conjunction with any other antenna or transmitter.

Cet équipement est conforme aux limites d'exposition aux rayonnements IC établies pour un environnement non contrôlé. Cet équipement doit être installé et utillisé avec un minimum de 30 cm de distance entre la source de rayonnement et votre corps.

FCC Notice

Changes or modifications not expressly approved by the party responsible for compliance could void the user's authority to operate the equipment.

INTELLIGENT FORWARD COLLISION WARNING (I-FCW)

BASIC INFORMATION

⚠ WARNING

Failure to follow the warnings and instructions for proper use of the I-FCW system could result in serious injury or death.

- **The I-FCW system can help warn the driver before a collision occurs but will not avoid a collision. It is the driver's responsibility to stay alert, drive safely and be in control of the vehicle at all times.**

The I-FCW system can help alert the driver when there is a sudden braking of a second vehicle traveling in front of the vehicle ahead in the same lane.

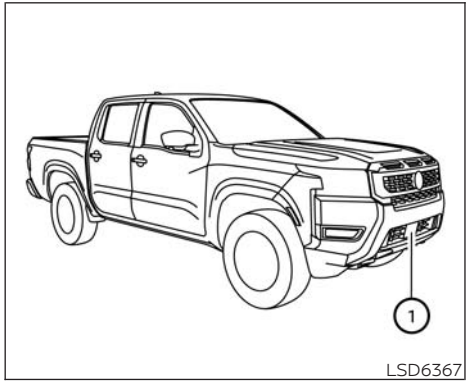

The I-FCW system uses a radar sensor ① located on the front of the vehicle to measure the distance to the vehicle ahead in the same lane.

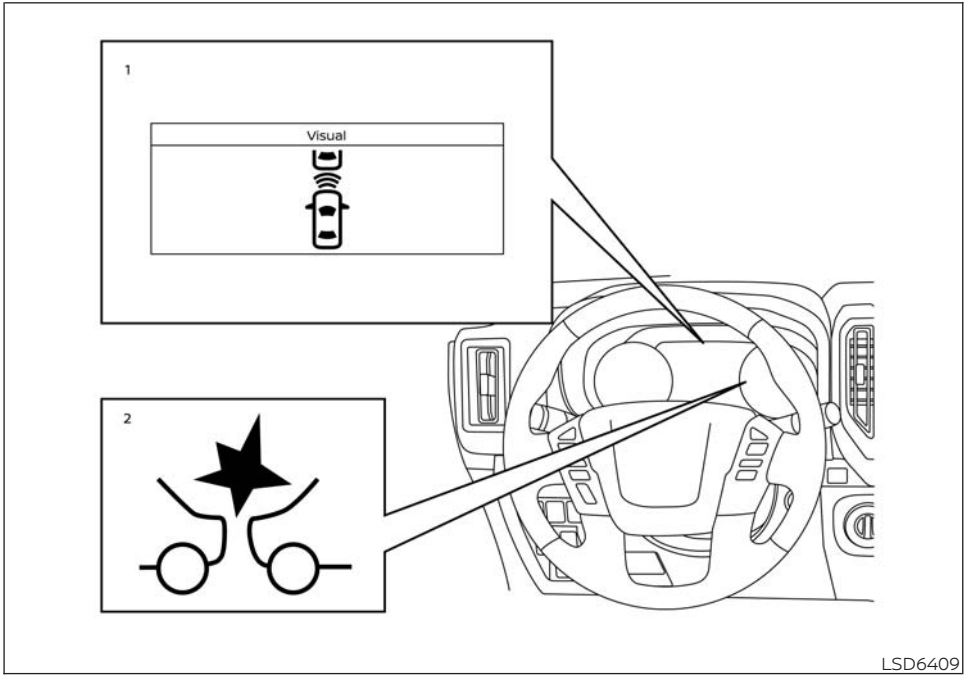

1. Vehicle ahead detection indicator
2. AEB with Pedestrian Detection system warning light

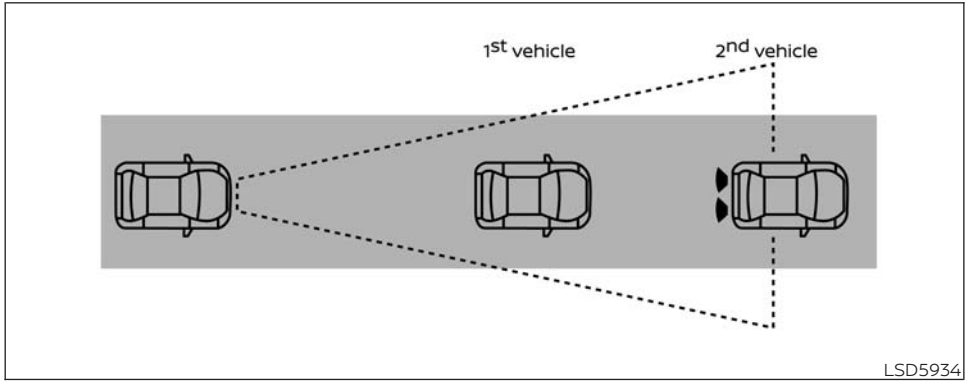

I-FCW SYSTEM OPERATION

The I-FCW system operates at speeds above approximately 3 mph (5 km/h).

If there is a potential risk of a forward collision, the I-FCW system will warn the driver by blinking the vehicle ahead detection indicator, and sounding an audible alert.

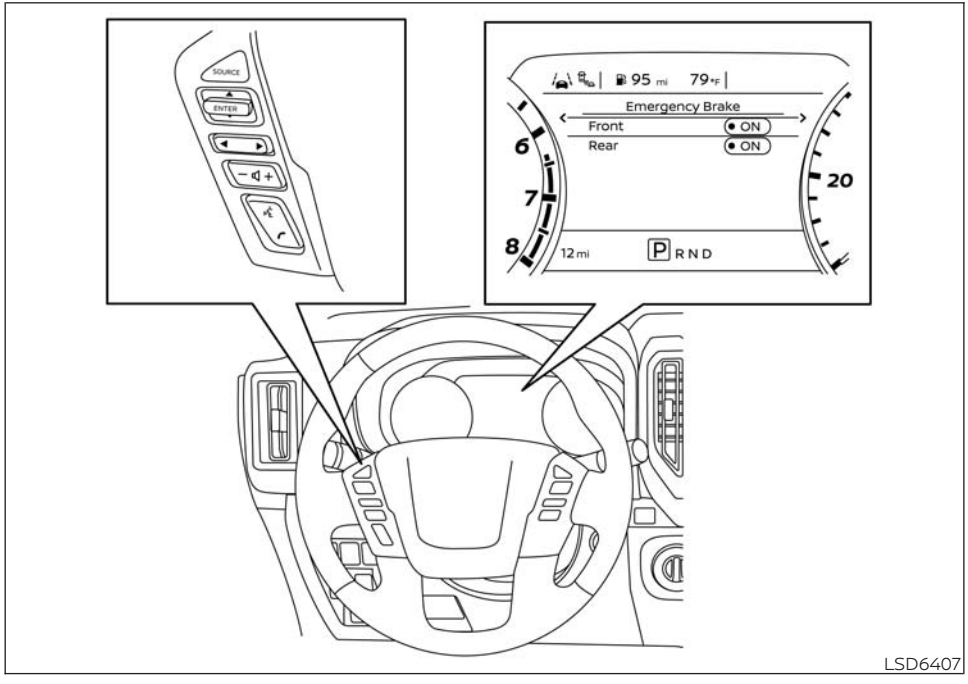

TURNING THE I-FCW SYSTEM ON/OFF

Perform the following steps to turn the I-FCW system ON or OFF.

1. Press the ◀ ▶ button until "Settings" displays in the vehicle information display. Use the ▲▼ button to select "Driver Assistance." Then press the ENTER button.
2. Select "Emergency Brake" and press the ENTER button.
3. Select "Front" and press the ENTER button to turn the system on or off.

When the I-FCW system is turned off, the AEB with Pedestrian Detection system warning light illuminates.

NOTE:

- **The I-FCW system will be automatically turned on when the engine is restarted.**
- **The I-FCW system is integrated into the AEB with Pedestrian Detection system. There is not a separate selection in the vehicle information display for the I-FCW system. When the AEB with Pedestrian Detection system is turned off, the I-FCW system is also turned off.**

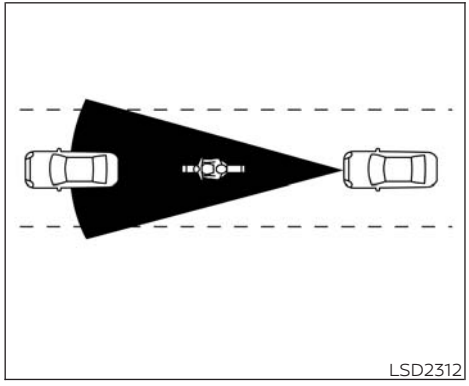

Illustration A

I-FCW SYSTEM LIMITATIONS

⚠ WARNING

Listed below are the system limitations for the I-FCW system. Failure to operate the vehicle in accordance with these system limitations could result in serious injury or death.

- **The I-FCW system cannot detect all vehicles under all conditions.**
- **The radar sensor does not detect the following objects:**
  - **Pedestrians, animals or obstacles in the roadway**
  - **Oncoming vehicles**
  - **Crossing vehicles**
- **(Illustration A) The I-FCW system does not function when a vehicle ahead is a narrow vehicle, such as a motorcycle.**
- **The radar sensor may not detect a vehicle ahead in the following conditions:**
  - **Snow or heavy rain**
  - **When you are towing a trailer etc.**
  - **Dirt, ice, snow or other material covering the radar sensor.**
  - **Interference by other radar sources.**
  - **Snow or road spray from traveling vehicles.**
  - **Driving in a tunnel**
  - **(Illustration B) When the vehicle ahead is being towed.**
  - **(Illustration C) When the distance to the vehicle ahead is too close, the beam of the radar sensor is obstructed.**
  - **(Illustration D) When driving on a steep downhill slope or roads with sharp curves.**
- **The system is designed to automatically check the sensor's functionality, within certain limitations. The system may not detect some forms of obstruction of the sensor area such as ice, snow, stickers, etc. In these cases, the system may not be able to warn the driver properly. Be sure that you check, clean and clear the sensor area regularly.**
- **Excessive noise will interfere with the warning chime sound, and the chime may not be heard.**

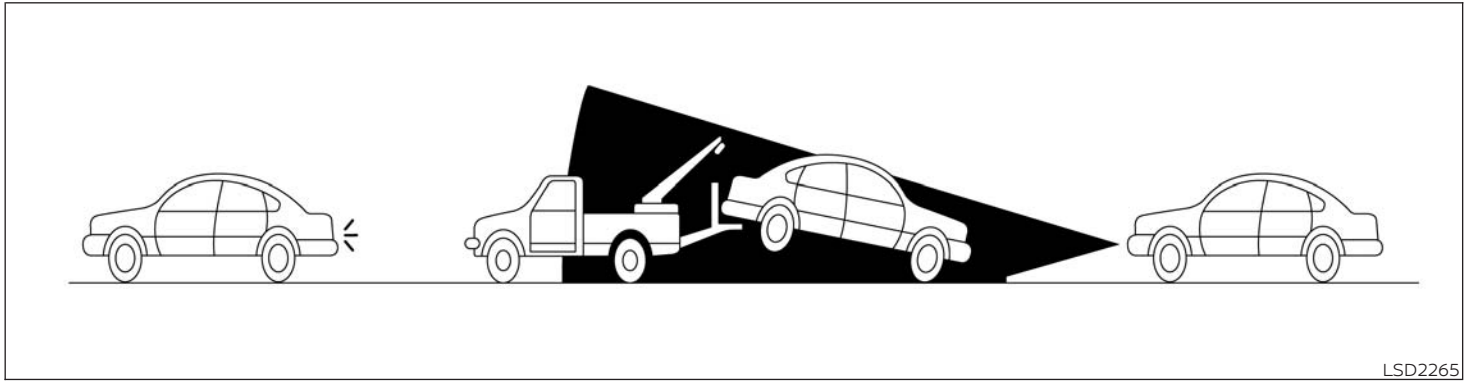

Illustration B

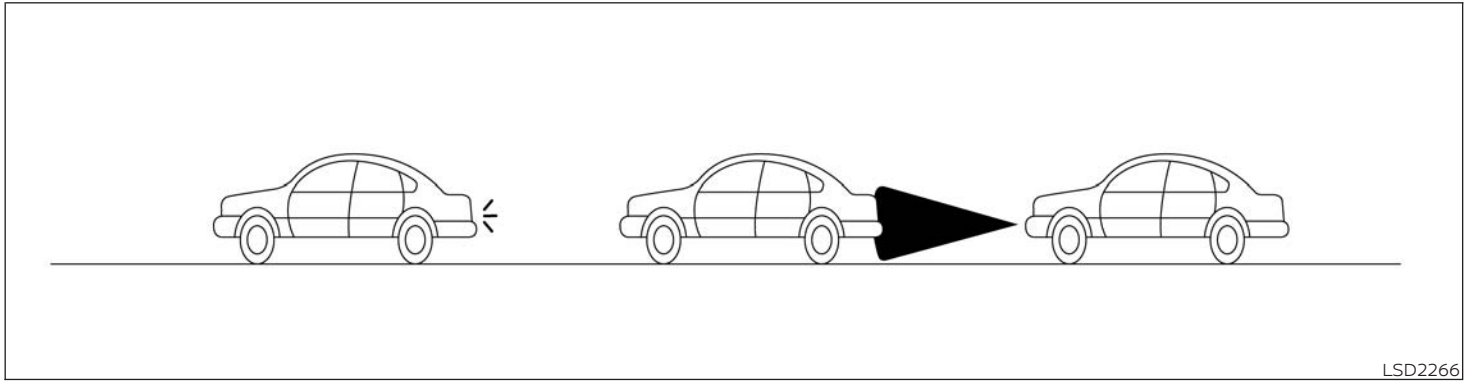

Illustration C

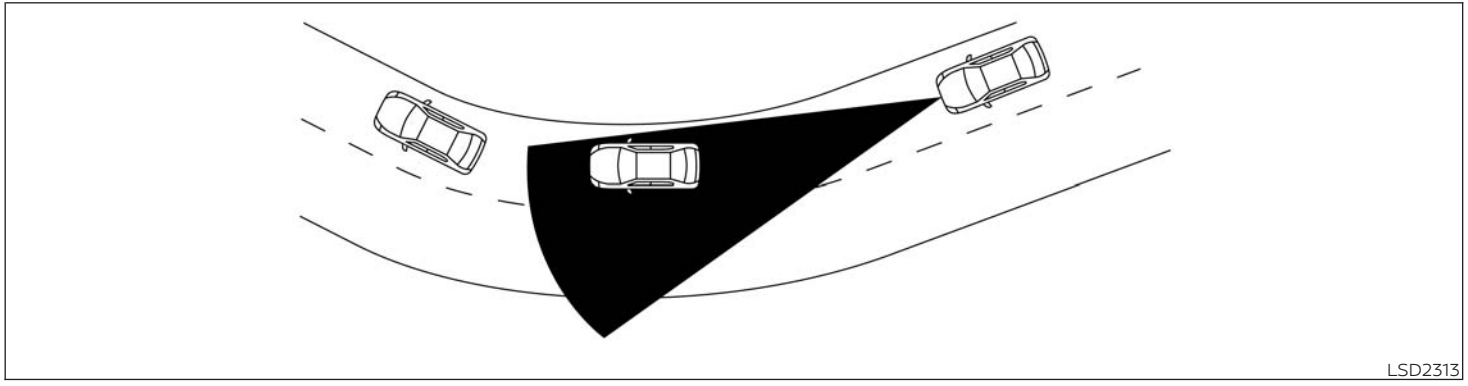

Illustration D

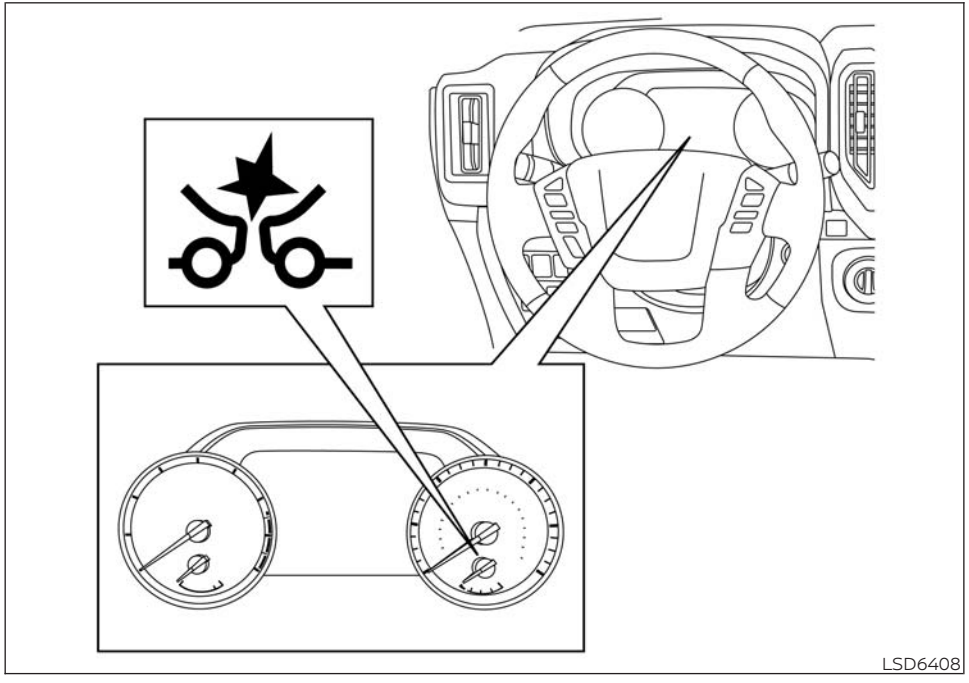

SYSTEM TEMPORARILY UNAVAILABLE

Condition A

When the radar sensor picks up interference from another radar source, making it impossible to detect a vehicle ahead, the I-FCW system is automatically turned off.

The AEB with Pedestrian Detection system warning light (orange) will illuminate.

Action to take

When the above conditions no longer exist, the I-FCW system will resume automatically.

Condition B

When there is inclement weather (rain, fog, snow, etc.) blocking the front radar sensor, the I-FCW system will automatically be canceled, the AEB with Pedestrian Detection system warning light will illuminate and the "Forward Driving Aids Temporarily Disabled Front Sensor Blocked See Owner's Manual" warning message will appear in the vehicle information display.

Action to take:

When the conditions listed above are no longer present, the warning message will no longer be available in the vehicle information display. If the "Forward Driving Aids Temporarily Disabled Front Sensor Blocked See Owner's Manual" warning message

continues to be displayed, have the system checked. It is recommended that you visit a NISSAN dealer for this service.

Condition C

When the radar sensor of the front bumper is covered with dirt or is obstructed, the I-FCW system will automatically be canceled, the AEB with Pedestrian Detection system warning light will illuminate and the "Forward Driving Aids Temporarily Disabled Front Sensor Blocked See Owner's Manual" warning message will appear in the vehicle information display.

Action to take:

If the warning message appears, stop the vehicle in a safe place, place the shift lever in the P (Park) position, and turn the engine off. When the radar signal is temporarily interrupted, clean the sensor area of the front bumper and restart the engine. If the "Forward Driving Aids Temporarily Disabled Front Sensor Blocked See Owner's Manual" warning message continues to be displayed, have the system checked. It is recommended that you visit a NISSAN dealer for this service.

Condition D

When driving on roads with limited road structures or buildings (for example, long bridges, deserts, snowfields, driving next to long walls), the system may illuminate the system warning light and display the "Forward Driving Aids Temporarily Disabled Front Sensor Blocked See Owner's Manual" warning message.

Action to take:

When the above driving conditions no longer exist, turn the system back on.

NOTE:

If the AEB with Pedestrian Detection system stops working, the I-FCW system will also stop working.

SYSTEM MALFUNCTION

If the I-FCW system malfunctions, it will be turned off automatically, a chime will sound, the AEB with Pedestrian Detection system warning light (orange) will illuminate and the warning message [System fault See Owner's Manual] will appear in the vehicle information display.

Action to take

If the warning light (orange) comes on, stop the vehicle in a safe location, turn the engine off and restart the engine. If the warning light continues to illuminate, have the I-FCW system checked. It is recommended that you visit a NISSAN dealer for this service.

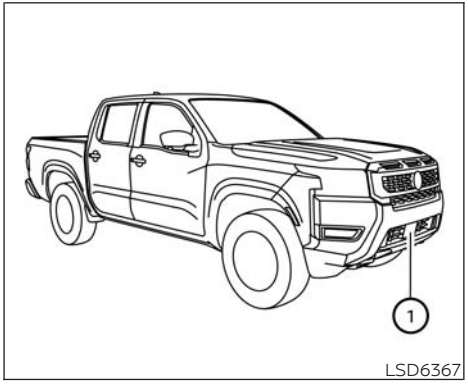

SYSTEM MAINTENANCE

Basic Information

The sensor ① is located on the front of the vehicle.

To keep the system operating properly, be sure to observe the following:

- Always keep the sensor area of the front bumper/emblem clean.
- Do not strike or damage the areas around the sensor.
- Do not cover or attach stickers or similar objects on the front bumper near the sensor area. This could cause failure or malfunction.
- Do not attach metallic objects near the sensor area (brush guard, etc.). This could cause failure or malfunction.
- Do not alter, remove or paint the front bumper. Before customizing or restoring the front bumper, it is recommended that you visit a NISSAN dealer.

Radio frequency statement

FCC Notice

USA

This device complies with Part 15 of the FCC Rules with Industry Canada licence-exempt RSS standard(s).

Operation is subject to the following two conditions:

1. **This device may not cause harmful interference, and**
2. **This device must accept any interference received, including interference that may cause undesired operation.**

Le présent appareil est conforme aux CNR d'Industrie Canada applicables aux appareils radio exempts de licence. L'exploitation est autorisée aux deux conditions suivantes:

1. **l'appareil ne doit pas produire de brouillage, et**
2. **l'utilisateur de l'appareil doit accepter tout brouillage radioélectrique subi, même si le brouillage est susceptible d'en compromettre le fonctionnement.**

Radio frequency radiation exposure Information:

This equipment complies with FCC and IC radiation exposure limits set forth for an uncontrolled environment.

This equipment should be installed and operated with minimum distance of 30 cm between the radiator and your body.

This transmitter must not be co-located or operating in conjunction with any other antenna or transmitter.

Cet équipement est conforme aux limites d'exposition aux rayonnements IC établies pour un environnement non contrôlé. Cet équipement doit être installé et utillisé avec un minimum de 30 cm de distance entre la source de rayonnement et votre corps.

FCC Notice

Changes or modifications not expressly approved by the party responsible for compliance could void the user's authority to operate the equipment.

CANADA

This device complies with Part 15 of the FCC Rules and Industry Canada licence-exempt RSS standard(s).

Operation is subject to the following two conditions:

1. **This device may not cause harmful interference, and**
2. **This device must accept any interference received, including interference that may cause undesired operation.**

Radio frequency radiation exposure Information:

This equipment complies with FCC and IC radiation exposure limits set forth for an uncontrolled environment.

This equipment should be installed and operated with minimum distance of 30 cm between the radiator and your body.

This transmitter must not be co-located or operating in conjunction with any other antenna or transmitter.

Cet équipement est conforme aux limites d'exposition aux rayonnements IC établies pour un environnement non contrôlé. Cet équipement doit être installé et utillisé avec un minimum de 30 cm de distance entre la source de rayonnement et votre corps.

FCC Notice

Changes or modifications not expressly approved by the party responsible for compliance could void the user's authority to operate the equipment.

INTELLIGENT DRIVER ALERTNESS (I-DA)

BASIC INFORMATION

⚠ WARNING

Failure to follow the warnings and instructions for proper use of the I-DA system could result in serious injury or death.

- **The I-DA system is only a warning to inform the driver of a potential lack of driver attention or drowsiness. It will not steer the vehicle or prevent loss of control.**
- **The I-DA system does not detect and provide an alert of the driver's lack of attention or fatigue in every situation.**
- **It is the driver's responsibility to:**
  - **stay alert,**
  - **drive safely,**
  - **keep the vehicle in the traveling lane,**
  - **be in control of the vehicle at all times,**
  - **avoid driving when tired,**
  - **avoid distractions (texting, etc.).**

The I-DA system helps alert the driver if the system detects a lack of attention or driving fatigue.

The system monitors driving style and steering behavior over a period of time, and it detects changes from the normal pattern. If the system detects that driver attention is decreasing over a period of time, the system uses audible and visual warnings to suggest that the driver take a break.

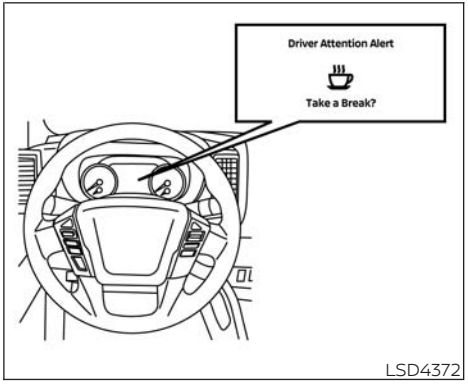

LSD4372

INTELLIGENT DRIVER ALERTNESS SYSTEM OPERATION

If the system detects driver fatigue or that driver attention is decreasing, the message "Take a break?" appears in the vehicle information display and a chime sounds when the vehicle is driven at speeds above 37 mph (60 km/h).

The system continuously monitors driver attention and can provide multiple warnings per trip.

The system resets and starts reassessing driving style and steering behavior when the ignition switch is cycled from the ON to the OFF position and back to the ON position.

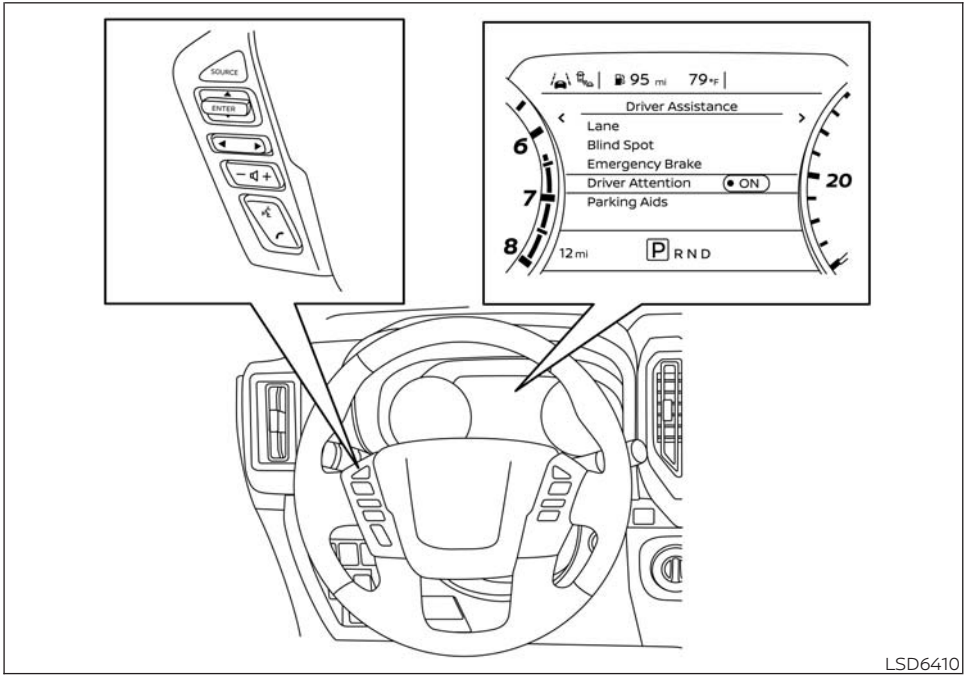

HOW TO ENABLE/DISABLE THE INTELLIGENT DRIVER ALERTNESS (I-DA) SYSTEM

Perform the following steps to enable or disable the I-DA system.

1. Press the ◀ ▶ button until "Settings" displays in the vehicle information display. Use the ▲▼ button to select "Driver Assistance." Then press the ENTER button.
2. Select "Driver Attention" and press the ENTER button to turn the system on or off.

NOTE:

The setting will be retained even if the engine is restarted.

INTELLIGENT DRIVER ALERTNESS (I-DA) SYSTEM LIMITATIONS

Basic Information

⚠ WARNING

Listed below are the system limitations for the I-DA system. Failure to operate the vehicle in accordance with these system limitations could result in serious injury or death.

- **The I-DA system may not operate properly and may not provide an alert in the following conditions:**
  - **Poor road conditions such as an uneven road surface or pot holes.**
  - **Strong side wind.**
  - **If you have adopted a sporty driving style with higher cornering speeds or higher rates of acceleration.**
  - **Frequent lane changes or changes to vehicle speed.**
- **The I-DA system will not provide an alert in the following conditions:**
  - **Vehicle speeds lower than 37 mph (60 km/h).**
  - **Short lapses of attention.**
  - **Instantaneous distractions such as dropping an object.**

System malfunction

If the Intelligent Driver Alertness system malfunctions, the system warning message will appear in the vehicle information display and the function will be stopped automatically.

Action to take

Stop the vehicle in a safe location, place the vehicle in P (Park) position, turn the engine off and restart the engine. If the system warning message continues to appear, have the system checked. It is recommended that you visit a NISSAN dealer for this service.

BREAK-IN SCHEDULE

⚠ CAUTION

During the first 1,200 miles (2,000 km), follow these recommendations to obtain maximum engine performance and ensure the future reliability and economy of your new vehicle. Failure to follow these recommendations may result in shortened engine life and reduced engine performance.

- Avoid driving for long periods at constant speed, either fast or slow, and do not run the engine over 4,000 rpm.
- Do not accelerate at full throttle in any gear.
- Avoid quick starts.
- Avoid hard braking as much as possible.
- Do not tow a trailer for the first 500 miles (805 kilometers). Your engine, axle or other parts could be damaged.

FUEL EFFICIENT DRIVING TIPS

Follow these easy-to-use Fuel Efficient Driving Tips to help you achieve the most fuel economy from your vehicle.

1. **Use Smooth Accelerator and Brake Pedal Application**
   - Avoid rapid starts and stops.
   - Use smooth, gentle accelerator and brake application whenever possible.
   - Maintain constant speed while commuting and coast whenever possible.
2. **Maintain Constant Speed**
   - Look ahead to try and anticipate and minimize stops.
   - Synchronizing your speed with traffic lights allows you to reduce your number of stops.
   - Maintaining a steady speed can minimize red light stops and improve fuel efficiency.
3. **Use Air Conditioning (A/C) at Higher Vehicle Speeds**
   - Below 40 mph (64 km/h), it is more efficient to open windows to cool the vehicle due to reduced engine load.
   - Above 40 mph (64 km/h), it is more efficient to use A/C to cool the vehicle due to increased aerodynamic drag.
   - Recirculating the cool air in the cabin when the A/C is on reduces cooling load.
4. **Drive at Economical Speeds and Distances**
   - Observing the speed limit and not exceeding 60 mph (97 km/h) (where legally allowed) can improve fuel efficiency due to reduced aerodynamic drag.
   - Maintaining a safe following distance behind other vehicles reduces unnecessary braking.
   - Safely monitoring traffic to anticipate changes in speed permits reduced braking and smooth acceleration changes.
   - Select a gear range suitable to road conditions.
5. **Use Cruise Control**
   - Using cruise control during highway driving helps maintain a steady speed.
   - Cruise control is particularly effective in providing fuel savings when driving on flat terrains.
6. **Plan for the Shortest Route**
   - Utilize a map or navigation system to determine the best route to save time.

7. **Avoid Idling**
   - Shutting off your engine when safe for stops exceeding 30–60 seconds saves fuel and reduces emissions.
8. **Buy an Automated Pass for Toll Roads**
   - Automated passes permit drivers to use special lanes to maintain cruising speed through the toll and avoid stopping and starting.
9. **Winter Warm Up**
   - Limit idling time to minimize impact to fuel economy.
   - Vehicles typically need no more than 30 seconds of idling at start-up to effectively circulate the engine oil before driving.
   - Your vehicle will reach its ideal operating temperature more quickly while driving versus idling.
10. **Keeping your Vehicle Cool**
   - Park your vehicle in a covered parking area or in the shade whenever possible.
   - When entering a hot vehicle, opening the windows will help to reduce the inside temperature faster, resulting in reduced demand on your A/C system.

INCREASING FUEL ECONOMY

- Keep your engine tuned up.
- Follow the recommended scheduled maintenance.
- Keep the tires inflated to the correct pressure. Low tire pressure increases tire wear and lowers fuel economy.
- Keep the wheels in correct alignment. Improper alignment increases tire wear and lowers fuel economy.
- For vehicles equipped with 4X4, use 4H or 4L position only when necessary. 4-Wheel Drive operation lowers fuel economy.
- Use the recommended viscosity engine oil. For additional information, see "Engine oil and oil filter recommendations" (P. 506).

USING 4-WHEEL DRIVE (4WD) (if so equipped)

BASIC INFORMATION

⚠ WARNING

- **For 4WD equipped vehicles, do not attempt to raise two wheels off the ground and shift the transmission to any drive or reverse position with the engine running. Doing so may result in drivetrain damage or unexpected vehicle movement which could result in serious vehicle damage or personal injury.**
- **Do not attempt to test a 4WD equipped vehicle on a 2-wheel dynamometer (such as the dynamometers used by some states for emissions testing), or similar equipment even if the other two wheels are raised off the ground. Make sure you inform test facility personnel that your vehicle is equipped with 4WD before it is placed on a dynamometer. Using the wrong test equipment may result in drivetrain damage or unexpected vehicle movement which could result in serious vehicle damage or personal injury.**

⚠ CAUTION

- **Do not drive the vehicle in the 4H or 4LO position on dry hard surface roads. Driving on dry, hard surfaces in 4H or 4LO may cause unnecessary noise, tire wear and increased fuel consumption.**
  If the 4WD vehicle information display warning message turns on when you are driving on dry hard surface roads:
  - **In the 4H position, shift the 4WD shift switch to 2WD.**
  - **In the 4LO position, stop the vehicle, move the shift lever to the N (Neutral) position with the brake pedal depressed, and shift the 4WD shift switch to 2WD.**
- **If the vehicle information display warning message is still on after the above operation, have your vehicle checked as soon as possible. It is recommended that you visit a NISSAN dealer for this service.**

TRANSFER CASE SHIFTING PROCEDURES

Basic Information

The part time 4WD system provides 3 positions (2WD, 4H and 4LO), so you can select the desired drive mode according to the driving conditions.

2WD or 4WD shift procedure:

2WD (REAR WHEELS DRIVEN)

Use conditions: For driving on dry, paved roads (Economy drive)

4WD shift procedure:

- Move the 4WD switch.
- 2WD <—> 4H 4WD shift indicator will indicate that the transfer shift position is engaged.
- IT IS NOT NECESSARY TO MOVE THE SHIFT LEVER TO THE N (NEUTRAL) POSITION IN THIS OPERATION.
- PERFORM THIS OPERATION WHEN DRIVING STRAIGHT.

4H (FOUR WHEELS DRIVEN)

Use conditions: For driving on rocky, sandy or snow covered roads.

4WD shift procedure:

- Move the 4WD switch.
- 2WD <—> 4H 4WD shift indicator will indicate that the transfer shift position is engaged.
- IT IS NOT NECESSARY TO MOVE THE SHIFT LEVER TO THE N (NEUTRAL) POSITION IN THIS OPERATION.
- PERFORM THIS OPERATION WHEN DRIVING STRAIGHT.

4H (N (NEUTRAL) POSITION)

Transfer 4LO position may blink.

Before moving the shift lever from N (Neutral), wait until the 4LO indicator stays on steady. This indicates that the 4WD shift procedure is completed and the transfer gear is correctly set in the 4LO position. If the vehicle is shifted into gear before the indicator is on steady, the transfer gear

may grind, not engage correctly or stay in the N (Neutral) position.

Use conditions:

- N (Neutral) disengages the automatic transmission (A/T) mechanical parking lock, which will allow the vehicle to roll.
- Do not leave the transfer shift position in N (Neutral).
- While changing in and out of 4LO, the ignition switch must be in the ON position and the vehicle's engine must be running for a shift to take place and for the 4WD shift and 4LO position indicators to be operable. Otherwise, the shift will not take place and no indicators will be on or flashing.

4WD shift procedure:

1. Stop the vehicle.
2. With the brake pedal depressed, move the shift lever to the N (Neutral) position.
3. With the brake pedal depressed, depress and turn the 4WD shift switch to 4LO or 4H.
   - THE TRANSFER CASE DOES NOT ENGAGE BETWEEN 4H AND 4LO (OR 4LO TO 4H) UNLESS YOU HAVE FIRST STOPPED THE VEHICLE, DEPRESSED THE BRAKE PEDAL AND MOVED THE SHIFT LEVER TO N (NEUTRAL).
   - Make sure the transfer 4LO position indicator turns on when you shift the 4WD shift switch to 4LO. The indicator light will also turn on when 4LO is selected. For additional information, see "Vehicle Dynamic Control (VDC) system" (P. 387).

4LO (N (NEUTRAL) POSITION)

Transfer 4LO position may blink

Before moving the shift lever from N (Neutral), wait until the 4LO indicator stays on steady. This indicates that the 4WD shift procedure is completed and the transfer gear is correctly set in the 4LO position. If the vehicle is shifted into gear before the indicator is on steady, the transfer gear may grind, not engage correctly or stay in the N (Neutral) position.

Use conditions:

- N (Neutral) disengages the automatic transmission (A/T) mechanical parking lock, which will allow the vehicle to roll.
- Do not leave the transfer shift position in N (Neutral).
- While changing in and out of 4LO, the ignition switch must be in the ON position and the vehicle's engine must be running for a shift to take place and for the 4WD shift and 4LO position indicators to be operable. Otherwise, the shift will not take place and no indicators will be on or flashing.

4WD shift procedure:

1. Stop the vehicle.
2. With the brake pedal depressed, move the shift lever to the N (Neutral) position.
3. With the brake pedal depressed, depress and turn the 4WD shift switch to 4LO or 4H.
   - THE TRANSFER CASE DOES NOT ENGAGE BETWEEN 4H AND 4LO (OR 4LO TO 4H) UNLESS YOU HAVE FIRST STOPPED THE VEHICLE, DEPRESSED THE BRAKE PEDAL AND MOVED THE SHIFT LEVER TO N (NEUTRAL).
   - Make sure the transfer 4LO position indicator turns on when you shift the 4WD shift switch to 4LO. The indicator light will also turn on when 4LO is selected. For additional information, see "Vehicle Dynamic Control (VDC) system" (P. 387).

4LO (FOUR WHEELS DRIVEN)

Transfer 4LO position Illuminated

Use conditions: For use when maximum power and traction is required (for example, on steep grades or rocky, sandy, muddy roads)

4WD shift procedure:

1. Stop the vehicle.
2. With the brake pedal depressed, move the shift lever to the N (Neutral) position.
3. With the brake pedal depressed, depress and turn the 4WD shift switch to 4LO or 4H.
   - THE TRANSFER CASE DOES NOT ENGAGE BETWEEN 4H AND 4LO (OR 4LO TO 4H) UNLESS YOU HAVE FIRST STOPPED THE VEHICLE, DEPRESSED THE BRAKE PEDAL AND MOVED THE SHIFT LEVER TO N (NEUTRAL).
   - Make sure the transfer 4LO position indicator turns on when you shift the 4WD shift switch to 4LO. The indicator light will also turn on when 4LO is selected. For additional information, see "Vehicle Dynamic Control (VDC) system" (P. 387).

If the 4WD vehicle information display warning message illuminates, perform the following procedure to return the transfer case to correct operating condition.

1. Turn off the engine by placing the ignition switch in the OFF position.

2. Start the engine.

- Check that the 4WD vehicle information display warning message turns off. If the warning message in the vehicle information display stays on, have the system checked. It is recommended that you visit a NISSAN dealer for this service.

3. Apply the parking brake, depress the brake pedal and move the shift lever to the N (Neutral) position.

4. With the brake pedal depressed, move the 4WD shift switch to the desired mode.

- Be sure to wait until the transfer gear change completes before shifting the shift lever from the N (Neutral) position.

When the 4LO position is selected, the VDC system is disabled and the VDC off indicator light illuminates, see "Vehicle Dynamic Control (VDC) OFF indicator light"(P. 122).

The transfer case 4WD shift switch is used to select either 2WD or 4WD depending on the driving conditions. There are three types of drive modes available, 2WD, 4H and 4LO.

The 4WD shift switch electronically controls the transfer case operation. Rotate the switch to move between each mode, 2WD, 4H and 4LO.

To change into or out of 4LO, the vehicle MUST be stationary, move the shift lever to N (Neutral), and depress the brake pedal. The switch must be pushed and turned to select 4LO.

⚠WARNING

- **When parking, apply the parking brake before stopping the engine and make sure that the 4WD shift indicator is on and the Automatic Transmission Park (ATP) warning light goes off. Otherwise, the vehicle could unexpectedly move even if the A/T is in the P (Park) position.**

- **The 4LO indicator must stop blinking and remain illuminated or turn off before shifting the transmission into gear. If the shift lever is shifted from the N (Neutral) position to any other gear when the 4LO indicator is blinking, the vehicle may move unexpectedly.**

⚠ CAUTION

- **Never shift the 4WD shift switch between 4LO and 4H while driving.**
- **The 4H position provides greater traction. Avoid excessive speed, as it will cause increased fuel consumption and higher oil temperatures, and could damage drivetrain components. Speeds over 62 mph (100 km/h) in 4H is not recommended.**
- **The 4LO position provides maximum power and traction. Avoid raising vehicle speed excessively, as the maximum speed is approximately 31 mph (50 km/h).**
- **When driving straight, shift the 4WD shift switch to the 2WD or 4H position. Do not move the 4WD shift switch when making a turn or reversing.**
- **Do not shift the 4WD shift switch (between 2WD and 4H) while driving on steep downhill grades. Use the engine brake and low A/T gears (M1 or M2) for engine braking.**
- **Do not operate the 4WD shift switch (between 2WD and 4H) with the rear wheels spinning.**
- **Do not drive on dry hard surface roads in the 4H or 4LO position. Driving on dry hard surfaces in 4H or 4LO may cause unnecessary noise and tire wear. NISSAN recommends driving in the 2WD position under these conditions.**
- **The 4WD transfer case may not be shifted between 4H and 4LO at low ambient temperatures and the transfer 4LO position indicator may blink even when the 4WD shift switch is shifted. After driving for a while you can change the 4WD transfer case between 4H and 4LO.**

When driving on rough roads:

- Set the 4WD shift switch to 4H or 4LO.
- Drive carefully according to the road surface conditions.

When the vehicle is stuck:

- Set the 4WD shift switch to 4H or 4LO.
- Place stones or wooden blocks under the tires to free the vehicle.
- Use the Electronic locking rear differential (E-Lock) system (if so equipped). For additional information, see "Electronic locking rear differential (E-Lock) system" (P. 382).
- If it is difficult to free the vehicle, rock the vehicle back and forth between reverse and drive gears.
- If the vehicle is stuck deep in mud, place stones or wooden blocks under the tires. Then try the recovery procedures above. Tire chains may be effective.

⚠ CAUTION

- **Do not spin the tires excessively. Tires will sink deep into the mud, making it difficult to free the vehicle.**
- **Avoid shifting gears with the engine running at high speeds as this may cause malfunction.**

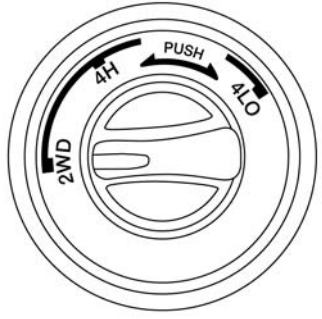

LSD2463

4WD shift switch operations

- Shift the 4WD shift switch to either the 2WD, 4H or 4LO position, depending on driving conditions.
- **If the 4WD shift switch is operated while making a turn, accelerating or decelerating or if the ignition switch is placed in the OFF position while in the 4H or 4LO, you may feel a jolt. This is not abnormal.**
- **You may hear some noise as the system shifts or engages. This is not abnormal.**

⚠ CAUTION

- **When driving straight, shift the 4WD shift switch to the 2WD or 4H position. Do not move the 4WD shift switch when making a turn or reversing.**
- **Do not shift the 4WD shift switch while driving on steep downhill grades. Use the engine brake and low automatic transmission gears (M1 or M2) for engine braking.**
- **Do not operate the 4WD shift switch with the rear wheels spinning.**
- **Before placing the 4WD shift switch in the 4H position from 2WD, ensure the vehicle speed is less than 62 mph (100 km/h). Failure to do so can damage the 4WD system.**
- **Never shift the 4WD shift switch between 4LO and 4H while driving.**

LSD2328

4WD shift indicator

The 4WD shift indicator is located in the vehicle information display.

The indicator should turn off within one second after placing the ignition switch in the ON position.

While the engine is running, the 4WD shift indicator will illuminate the position selected by the 4WD shift switch.

- **The 4WD shift indicator may come on while shifting from one drive mode to the other. When the shifting is completed, the 4WD shift indicator will stay on.**

- If the 4WD vehicle information display warning message comes on, the 4WD shift indicator goes out.

⚠ CAUTION

If the 4WD shift indicator indication changes to 2WD when the 4WD shift switch is shifted to the 4H position at low ambient temperatures, the 2WD mode may be being engaged due to malfunctioning drive system. If the indicator does not return to normal and the 4WD vehicle information display warning message comes on, have the system checked. It is recommended that you visit a NISSAN dealer for this service.

Warning message

Warning message	Warning message comes on or blinks when:
Vehicle information display	
4WD 4WD Error: See Owner's Manual	There is a malfunction in the 4-Wheel Drive system

The 4WD warning message is located in the meter. The 4WD warning message comes on when the ignition switch is placed in the ON position. It turns off soon after the engine is started. If any malfunction occurs in the 4WD system when the ignition switch is ON, the warning message will either remain illuminated or blink. If the 4WD warning message comes on, the 4WD shift indicator goes out. A large difference between the diameters of front and rear wheels will make the warning message blink slowly (about once per two seconds). Shift the 4WD shift switch into 2WD and do not drive fast.

⚠ CAUTION

- **If the warning message comes on during operation or rapidly after stopping the vehicle for a while, have your vehicle checked as soon as possible. It is recommended that you visit a NISSAN dealer for this service.**
- **Shifting between 4H and 4LO is not recommended when the 4WD warning message turns on.**
- **When the warning message comes on, the 2WD mode may be engaged even if the 4WD shift switch is in 4H. Be especially careful when driving. If corresponding parts are malfunctioning, the 4WD mode will not be engaged even if the 4WD shift switch is shifted.**
- **Do not drive the vehicle in the 4H or 4LO position on dry hard surface roads. Driving on dry, hard surfaces in 4H or 4LO may cause unnecessary noise, tire wear and increased fuel consumption.**
  If the 4WD warning message turns on when you are driving on dry hard surface roads:
  - **In the 4H position, shift the 4WD shift switch to 2WD.**
  - **In the 4LO position, stop the vehicle, move the automatic transmission shift lever to the N (Neutral) position with the brake pedal depressed, and shift the 4WD shift switch to 2WD.**
- **If the warning message is still on after the above operation, have your vehicle checked as soon as possible. It is recommended that you visit a NISSAN dealer for this service.**
- **The transfer case may be damaged if you continue driving with the warning message on.**

ELECTRONIC LOCKING REAR DIFFERENTIAL (E-Lock) SYSTEM (if so equipped)

The E-Lock system can provide additional traction and should only be used when a vehicle has become or is becoming stuck. This system operates by electronically "locking" the two rear drive wheels together, allowing them to turn at the same speed. The system is used when it is not possible to free a stuck vehicle even when using the 4LO position (4-Wheel Drive vehicles).

When added traction is required, activate the E-Lock system by pushing the switch ON. For additional information, see "Electronic locking rear differential (E-Lock) system switch" (P. 160). Once the system fully engages, the indicator light in the instrument panel will remain on. When the system is activated, both rear wheels will engage, providing added traction.

The rear wheels may momentarily slip or move to engage the system, and the system will only engage up to approximately 4 mph (7 km/h). Once the vehicle is free, the system should be turned off and driving resumed.

The Anti-Lock Braking (ABS) system is disabled and the ABS light illuminates when the E-Lock system is on. Also, the Vehicle Dynamic Control (VDC) system is disabled and the indicator light illuminates when the E-Lock system is on.

WARNING

- **Never leave the E-Lock system on when driving on paved or hard-surfaced roads. Turning the vehicle may result in the rear wheels slipping and result in an accident and personal injury. After using the E-Lock system to free the vehicle, turn the system off.**
- **Use the E-Lock system only when freeing a stuck vehicle. Try the 4LO position before using the E-Lock system. Never use the E-Lock system on a slippery road surface such as snow or ice surface. Using the E-Lock system when driving in these road conditions may cause unexpected movement of the vehicle during engine braking, accelerating or turning, which may result in an accident and serious personal injury.**
- **Observe the above warnings. Otherwise, loss of normal steering control may result. This may result in an accident and serious personal injury.**

CAUTION

- **After using the E-Lock system, turn the switch OFF to prevent possible damage to driveline components from extended use.**
- **Do not drive the vehicle at speeds faster than 12 mph (20 km/h) when the system is engaged. Doing so could damage drivetrain components.**
- **Do not turn on the E-Lock system while the tires are spinning. Doing so could damage drivetrain components.**

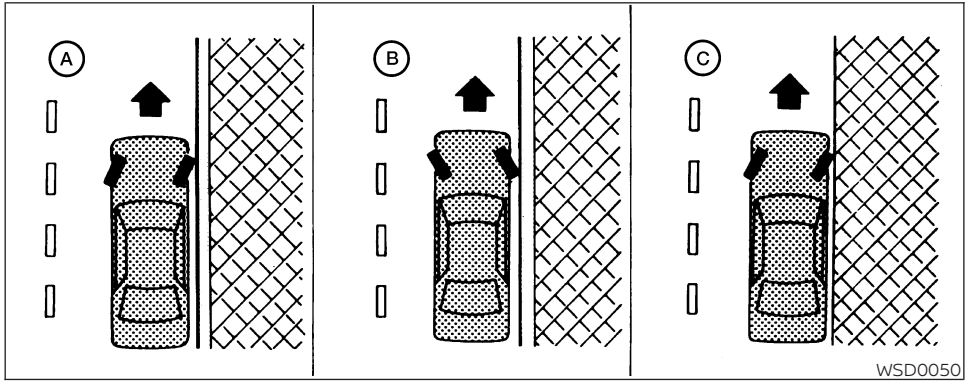

⚠WARNING

- **Do not stop or park the vehicle over flammable materials such as dry grass, waste paper or rags. They may ignite and cause a fire.**
- **Safe parking procedures require that both the parking brake be set and the transmission placed into P (Park). Failure to do so could cause the vehicle to move unexpectedly or roll away and result in an accident. Make sure the shift lever has been pushed as far forward as it can go and cannot be moved without depressing the foot brake pedal.**
- **Never leave the engine running while the vehicle is unattended.**
- **Do not leave children unattended inside the vehicle. They could unknowingly activate switches or controls or make the vehicle move. Unattended children could become involved in serious accidents.**
- **To help avoid risk of injury or death through unintended operation of the vehicle and/or its systems, do not leave children, people who require the assistance of others or pets unattended in your vehicle. Additionally, the temperature inside a closed vehicle on a warm day can quickly become high enough to cause a significant risk of injury or death to people and pets.**

1. Firmly apply the parking brake.
2. Move the shift lever to the P (Park) position.
3. To help prevent the vehicle from rolling into traffic when parked on an incline, it is a good practice to turn the wheels as illustrated.
   - HEADED DOWNHILL WITH CURB Ⓐ:
     Turn the wheels into the curb and move the vehicle forward until the curb side wheel gently touches the curb.
   - HEADED UPHILL WITH CURB Ⓑ:
     Turn the wheels away from the curb and move the vehicle back until the curb side wheel gently touches the curb.
   - HEADED UPHILL OR DOWNHILL, NO CURB Ⓒ:
     Turn the wheels toward the side of the road so the vehicle will move away from the center of the road if it moves.

4. Place the ignition switch in the LOCK position.

NOTE:

Using Idling Stop System when the vehicle is stopped for a period of time, for example waiting at stoplights. Stop the engine with the ignition switch when parking, etc. for an extended period of time.

POWER STEERING

The power assisted steering uses a hydraulic pump, driven by the engine, to assist steering.

If the engine stops or the drive belt breaks, you will still have control of the vehicle. However, much greater steering effort is needed, especially in sharp turns and at low speeds.

⚠WARNING

If the engine is not running or is turned off while driving, the power assist for the steering will not work. Steering will be harder to operate.

BRAKE SYSTEM

BASIC INFORMATION

The brake system has two separate hydraulic circuits. If one circuit malfunctions, you will still have braking at two wheels.

BRAKE PRECAUTIONS

Using the brakes

Avoid resting your foot on the brake pedal while driving. This will overheat the brakes, wear out the brake pads faster, and reduce gas mileage.

To help reduce brake wear and to prevent the brakes from overheating, reduce speed and downshift to a lower gear before going down a slope or long grade. Overheated brakes may reduce braking performance and could result in loss of vehicle control.

⚠WARNING

- **While driving on a slippery surface, be careful when braking, accelerating or downshifting. Abrupt braking or accelerating could cause the wheels to skid and result in an accident.**

- **If the engine is not running or is turned off while driving, the power assist for the brakes will not work. Braking will be harder.**

Wet brakes

When the vehicle is washed or driven through water, the brakes may get wet. As a result, your braking distance will be longer and the vehicle may pull to one side during braking.

To dry the brakes, drive the vehicle at a safe speed while lightly pressing the brake pedal to heat up the brakes. Do this until the brakes return to normal. Avoid driving the vehicle at high speeds until the brakes function correctly.

Parking brake break-in

Break in the parking brake shoes whenever the stopping effect of the parking brake is weakened or whenever the parking brake shoes and/or drums/rotors are replaced, in order to assure the best braking performance.

This procedure is described in the vehicle service manual. It is recommended that you visit a NISSAN dealer for this service.

ANTI-LOCK BRAKING SYSTEM (ABS)

Basic Information

⚠WARNING

- **The ABS is a sophisticated device, but it cannot prevent accidents resulting from careless or dangerous driving techniques. It can help maintain vehicle control during braking on slippery surfaces. Remember that stopping distances on slippery surfaces will be longer than on normal surfaces even with ABS. Stopping distances may also be longer on rough, gravel or snow covered roads, or if you are using tire chains. Always maintain a safe distance from the vehicle in front of you. Ultimately, the driver is responsible for safety.**
- **Tire type and condition may also affect braking effectiveness.**
  - **When replacing tires, install the specified size of tires on all four wheels.**
  - **When installing a spare tire, make sure that it is the proper size and type as specified on the Tire and Loading Information label. For additional information, see "Tire and Loading Information label" (P. 463).**
  - **For additional information, see "Wheels and tires" (P. 461).**

The ABS controls the brakes so the wheels do not lock during hard braking or when braking on slippery surfaces. The system detects the rotation speed at each wheel and varies the brake fluid pressure to prevent each wheel from locking and sliding. By preventing each wheel from locking, the system helps the driver maintain steering control and helps to minimize swerving and spinning on slippery surfaces.

Using the system

Depress the brake pedal and hold it down. Depress the brake pedal with firm steady pressure, but do not pump the brakes. The Anti-lock Braking System will operate to prevent the wheels from locking up. Steer the vehicle to avoid obstacles.

⚠ WARNING

Do not pump the brake pedal. Doing so may result in increased stopping distances.

Self-test feature

The Anti-lock Braking System (ABS) includes electronic sensors, electric pumps, hydraulic solenoids and a computer. The computer has a built-in diagnostic feature that tests the system each time you start the engine and move the vehicle at a low speed in forward or reverse. When the self-test occurs, you may hear a "clunk" noise and/or feel a pulsation in the brake pedal. This is normal and does not indicate a malfunction. If the computer senses a malfunction, it switches the ABS off and illuminates the ABS warning light on the instrument panel. The brake system then operates normally but without anti-lock assistance.

If the ABS warning light illuminates during the self-test or while driving, have the vehicle checked. It is recommended that you visit a NISSAN dealer for this service.

Normal operation

The Anti-lock Braking System (ABS) operates at speeds above 3 - 6 mph (5 - 10 km/h). The speed varies according to road conditions.

When the ABS senses that one or more wheels are close to locking up, the actuator rapidly applies and releases hydraulic pressure. This action is similar to pumping the brakes very quickly. You may feel a pulsation in the brake pedal and hear a noise from under the hood or feel a vibration from the actuator when it is operating. This is normal and indicates that the ABS is operating properly. However, the pulsation may indicate that road conditions are hazardous and extra care is required while driving.

ACTIVE BRAKE LIMITED SLIP (ABLS) SYSTEM

- The ABLS system uses automatic braking to transfer power from a slipping drive wheel to the wheel on the same axle with more traction. The ABLS system applies braking to the slipping wheel, which helps redirect power to the other wheel.
- On 4–Wheel Drive models the ABLS system operates in both 4H and 4LO modes. If 4WD mode is engaged, the ABLS system operates for both drive axles. On 2–Wheel Drive vehicles, the ABLS system operates on the drive axle only.
- The ABLS system is always on. In some conditions, the system may automatically turn the ABLS system off. If the system is automatically turned off, normal brake function will continue. ABLS will function even when the Vehicle Dynamic Control system is turned off.
- The ABLS does not operate if both wheels on a drive axle are slipping.

⚠ WARNING

- **The ABLS system helps provide increased traction, but will not prevent accidents due to abrupt steering operation or by careless driving or dangerous driving practices. Reduce vehicle speed and be especially careful**

when driving and cornering on slippery surfaces. Always drive carefully.

- **Do not modify the vehicle's suspension. If suspension parts such as shock absorbers, struts, springs, stabilizer bars, bushings and wheels are not NISSAN approved for your vehicle or are extremely deteriorated, the ABLS system may not operate properly. This could adversely affect vehicle handling performance, and the slip indicator light may illuminate.**
- **If brake related parts such as brake pads, rotors and calipers are not NISSAN recommended or are extremely deteriorated, the ABLS system may not operate properly and the slip indicator light may illuminate.**
- **If wheels or tires other than the NISSAN recommended ones are used, the ABLS system may not operate properly and the slip indicator light may illuminate.**

BASIC INFORMATION

The VDC system uses various sensors to monitor driver inputs and vehicle motion. Under certain driving conditions, the VDC system helps to perform the following functions:

- Controls brake pressure to reduce wheel slip on one slipping drive wheel so power is transferred to a non-slipping drive wheel on the same axle.
- Controls brake pressure and engine output to reduce drive wheel slip based on vehicle speed (traction control function).
- If the 4WD transfer case is shifted into 4LO the OFF indicator light will come on and the VDC system will be turned off. For additional information, see "Using 4–Wheel Drive (4WD)" (P. 374).
- Controls brake pressure at individual wheels and engine output to help the driver maintain control of the vehicle in the following conditions:
  - Understeer (vehicle tends to not follow the steered path despite increased steering input)
  - Oversteer (vehicle tends to spin due to certain road or driving conditions)

The VDC system can help the driver to maintain control of the vehicle, but it cannot prevent loss of vehicle control in all driving situations.

When the VDC system operates, the indicator light in the instrument panel flashes so note the following:

- The road may be slippery or the system may determine some action is required to help keep the vehicle on the steered path.
- You may feel a pulsation in the brake pedal and hear a noise or vibration from under the hood. This is normal and indicates that the VDC system is working properly.
- Adjust your speed and driving to the road conditions.

For additional information, see "Slip indicator light" (P. 122) and "Vehicle Dynamic Control (VDC) OFF indicator light" (P. 122).

If a malfunction occurs in the system, the indicator light will come on in the instrument panel. The VDC system automatically turns off when this indicator light is on.

The VDC OFF switch is used to turn off the VDC system. The indicator light, RAB warning light, and the AEB with Pedestrian Detection system warning light illuminate to indicate the VDC, RAB and AEB with Pedestrian Detection systems are off.

When the VDC OFF switch is used to turn off the system, the VDC system still operates to prevent one drive wheel from slipping by transferring power to a non-slipping drive wheel. The indicator light flashes if this occurs. All other VDC functions are off and the indicator light will not flash.

The VDC system is automatically reset to on when the ignition switch is placed in the OFF position then back to the ON position.

The computer has a built-in diagnostic feature that tests the system each time you start the engine and move the vehicle forward or in reverse at a slow speed. When the self-test occurs, you may hear a clunk noise and/or feel a pulsation in the brake pedal. This is normal and is not an indication of a malfunction.

WARNING

- **The VDC system is designed to help the driver maintain stability but does not prevent accidents due to abrupt steering operation at high speeds or by careless or dangerous driving techniques. Reduce vehicle speed and be especially careful when driving and cornering on slippery surfaces and always drive carefully.**
- **Do not modify the vehicle's suspension. If suspension parts such as shock absorbers, struts, springs, stabilizer bars, bushings and wheels are not NISSAN recommended for your vehicle or are extremely deteriorated, the VDC system may not operate properly. This could adversely affect vehicle handling performance, and the indicator light may flash or the indicator light may illuminate.**
- **If brake related parts such as brake pads, rotors and calipers are not NISSAN recommended or are extremely deteriorated, the VDC system may not operate properly and both the and indicator lights may illuminate.**
- **If engine control related parts are not NISSAN recommended or are extremely deteriorated, both the and indicator lights may illuminate.**
- **When driving on extremely inclined surfaces such as higher banked corners, the VDC system may not operate properly and the indicator light may flash or the indicator light may illuminate. Do not drive on these types of roads.**
- **When driving on an unstable surface such as a turntable, ferry, elevator or ramp, the indicator light may flash or the indicator light may illuminate. This is not a malfunction. Restart the engine after driving onto a stable surface.**
- **If wheels or tires other than the NISSAN recommended ones are used, the VDC system may not operate properly and the indicator light may flash or the indicator light may illuminate.**
- **The VDC system is not a substitute for winter tires or tire chains on a snow covered road.**

BRAKE FORCE DISTRIBUTION

During braking while driving through turns, the system optimizes the distribution of force to each of the four wheels depending on the radius of the turn.

⚠ WARNING

- **The VDC system is designed to help the driver maintain stability but does not prevent accidents due to abrupt steering operation at high speeds or by careless or dangerous driving techniques. Reduce vehicle speed and be especially careful when driving and cornering on slippery surfaces and always drive carefully.**
- **Do not modify the vehicle's suspension. If suspension parts such as shock absorbers, struts, springs, stabilizer bars, bushings and wheels are not NISSAN recommended for your vehicle or are extremely deteriorated, the VDC system may not operate properly. This could adversely affect vehicle handling performance, and the indicator light may flash or the indicator light may illuminate.**
- **If brake related parts such as brake pads, rotors and calipers are not NISSAN recommended or are extremely deteriorated, the VDC system may not operate properly and both the and the indicator lights may illuminate.**
- **If engine control related parts are not NISSAN recommended or are extremely deteriorated, both the and indicator lights may illuminate.**
- **When driving on extremely inclined surfaces such as higher banked corners, the VDC system may not operate properly and the indicator light may flash or the indicator light may illuminate. Do not drive on these types of roads.**
- **When driving on an unstable surface such as a turntable, ferry, elevator or ramp, the indicator light may flash or the indicator light may illuminate. This is not a malfunction. Restart the engine after driving onto a stable surface.**
- **If wheels or tires other than the NISSAN recommended ones are used, the VDC system may not operate properly and the indicator light may flash or the indicator light may illuminate.**
- **The VDC system is not a substitute for winter tires or tire chains on a snow covered road.**

HILL DESCENT CONTROL SYSTEM (if so equipped)

⚠ WARNING

- **Never rely solely on the hill descent control system to control vehicle speed when driving on steep downhill grades. Always drive carefully and attentively when using the hill descent control system and decelerate the vehicle speed by depressing the brake pedal if necessary. Be especially careful when driving on frozen, muddy or extremely steep downhill roads. Failure to control vehicle speed may result in a loss of control of the vehicle and possible serious injury or death.**
- **The hill descent control may not control the vehicle speed on a hill under all load or road conditions. Always be prepared to depress the brake pedal to control vehicle speed. Failure to do so may result in a collision or serious personal injury.**

The hill descent control system helps maintain vehicle speed when driving under 15-21 mph (25-35 km/h) on steeper downhill grades. Hill descent control is useful when engine braking alone in 4H or 4L cannot control vehicle speed. Hill descent control applies the vehicle brakes to control vehicle speed allowing the driver to concentrate on steering while reducing the burden of brake and accelerator operation.

- When additional braking is required on steep downhill roads, activate the hill descent control system by pushing the switch on. For additional information, see "Hill descent control switch" (P. 158).
- Once the system is activated, the indicator light will remain on in the instrument panel. For additional information, see "Hill descent control system ON indicator light" (P. 119).

If the accelerator or brake pedal is depressed while the hill descent control system is on, the system will stop operating temporarily. As soon as the accelerator or brake pedal is released, the hill descent control system begins to function again if the hill descent control operating conditions are fulfilled.

For the best results, when descending steep downhill grades, the hill descent control switch should be on and the shift lever in 2 (Second gear) or 1 (Low gear) for engine braking.

HILL START ASSIST SYSTEM

⚠ WARNING

- **Never rely solely on the hill start assist system to prevent the vehicle from moving backward on a hill. Always drive carefully and attentively. Depress the brake pedal when the vehicle is stopped on a steep hill. Be especially careful when stopped on a hill on frozen or muddy roads. Failure to prevent the vehicle from rolling backwards may result in a loss of control of the vehicle and possible serious injury or death.**
- **The hill start assist system is not designed to hold the vehicle at a standstill on a hill. Depress the brake pedal when the vehicle is stopped on a steep hill. Failure to do so may cause the vehicle to roll backwards and may result in a collision or serious personal injury.**
- **The hill start assist may not prevent the vehicle from rolling backwards on a hill under all load or road conditions. Always be prepared to depress the brake pedal to prevent the vehicle from rolling backwards. Failure to do so may result in a collision or serious personal injury.**

When the vehicle is stopped on a hill, the hill start assist system automatically keeps the brakes applied. This helps prevents the vehicle from rolling backward in the time it takes the driver to release the brake pedal and apply the accelerator.

Hill start assist will operate automatically under the following conditions:

- The shift lever is moved to a forward or reverse gear.
- The vehicle is stopped completely on a hill by applying the brake.

The maximum holding time is 2 seconds. After 2 seconds the vehicle will begin to roll back and hill start assist will stop operating completely.

Hill start assist will not operate when the shift lever is moved to N (Neutral) or P (Park) or on a flat and level road.

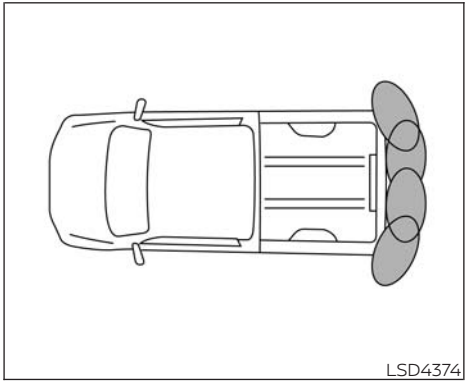

BASIC INFORMATION

The RSS sounds a tone to inform the driver of obstacles near the bumper.

When the "DISPLAY" key is on, the sonar view will automatically appear in the touch-screen display. An additional view of the sonar status will appear in the vehicle information display for reference.

⚠ WARNING

- **The RSS is a convenience but it is not a substitute for proper parking.**
- **The driver is always responsible for safety during parking and other maneuvers. Always look around and check that it is safe to do so before parking.**
- **Read and understand the limitations of the RSS as contained in this section. The colors of the corner sonar indicator and the distance guide lines in the rear view indicate different distances to the object.**
- **Inclement weather or ultrasonic sources such as an automatic car wash, a truck's compressed-air brakes or a pneumatic drill may affect the function of the system; this may include reduced performance or a false activation.**
- **This function is designed as an aid to the driver in detecting large stationary objects to help avoid damaging the vehicle.**

- **The system is not designed to prevent contact with small or moving objects. Always move slowly. The system will not detect small objects below the bumper, and may not detect objects close to the bumper or on the ground.**
- **The system may not detect the following objects: fluffy objects such as snow, cloth, cotton, glass, wool, etc.; thin objects such as rope, wire and chain, etc.; or wedge-shaped objects.**

If your vehicle sustains damage to the bumper fascia, leaving it misaligned or bent, the sensing zone may be altered causing inaccurate measurement of obstacles or false alarms.

⚠ CAUTION

- **Excessive noise (such as audio system volume or an open vehicle window) will interfere with the tone and it may not be heard.**
- **Keep the sonar sensors (located on the bumper fascia) free from snow, ice and large accumulations of dirt. Do not clean the sensors with sharp objects. If the sensors are covered, the accuracy of the sonar function will be diminished.**

SYSTEM OPERATION

The system informs with a visual and audible alert of rear obstacles when the shift lever is in the R (Reverse) position.

The system is deactivated at speeds above 6 mph (10 km/h). It is reactivated at lower speeds.

The intermittent tone will stop after 3 seconds when an obstacle is detected by only the corner sensor and the distance does not change. The tone will stop when the obstacle gets away from the vehicle.

When the object is detected, the indicator (green) appears and blinks and the tone sounds intermittently. When the vehicle moves closer to the object, the color of the indicator turns yellow and the rate of the blinking increases. When the vehicle is very close to the object, the indicator stops blinking and turns red, and the tone sounds continuously.

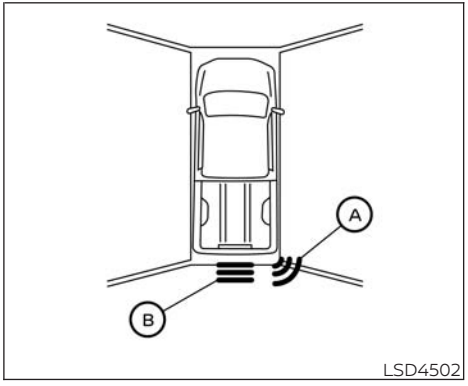

When the corner of the vehicle moves closer to an object, the corner sonar indicator Ⓐ appears. When the center of the vehicle moves close to an object, the center sonar indicator Ⓑ appears.

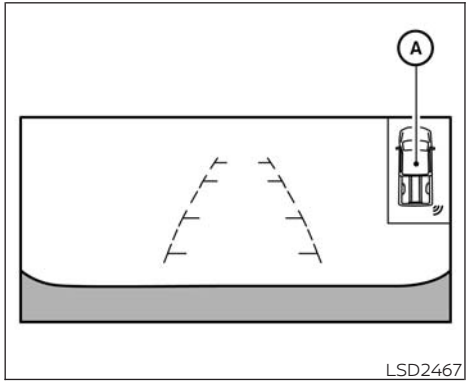

The system indicators Ⓐ will appear when the vehicle moves closer to an object.

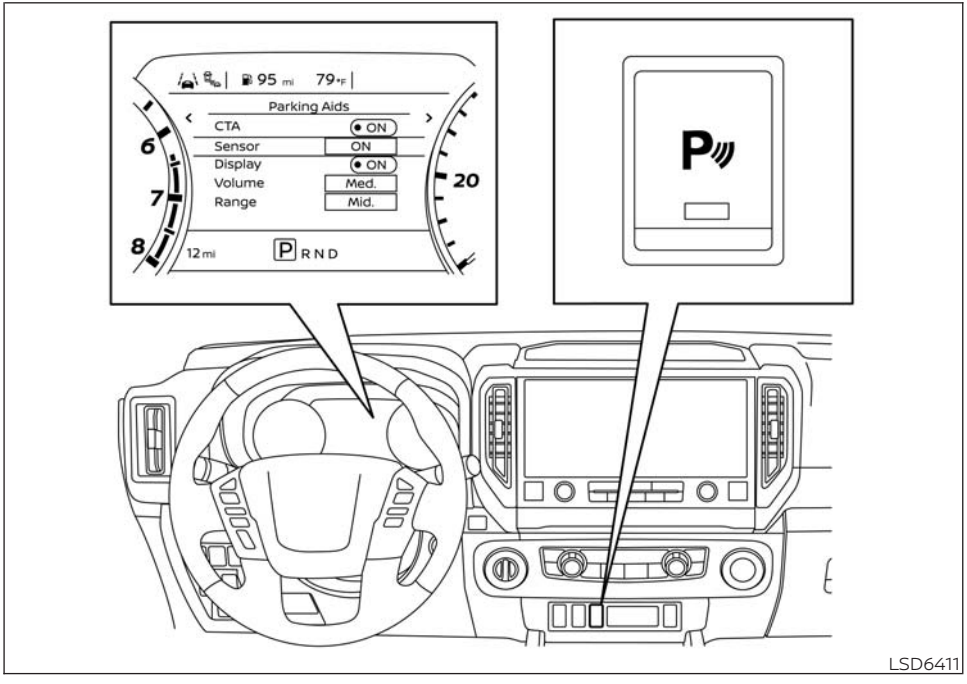

HOW TO ENABLE/DISABLE THE RSS

The system is automatically activated when the ignition is in the ON position and the shift lever is in the R (Reverse) position.

Perform the following steps to enable or disable the sonar system:

1. Press the ◀ ▶ button until "Settings" displays in the vehicle information display. Use the ▲▼ button to select "Driver Assistance." Then press ENTER.
2. Select "Parking Aids" and press ENTER.
3. Select "Sensor" and press ENTER to turn the sonar system on or off.
   - Select "Display" to turn the sonar system display on or off.
   - Select "Range" to change the sonar distance to "Near," "Mid," or "Far".
   - Select "Volume" to change the volume to "High," "Medium," or "Low".
4. Push the Parking Aids system switch to turn the system on or off.

SONAR LIMITATIONS

⚠ WARNING

Listed below are the system limitations for the sonar system. Failure to operate the vehicle in accordance with these system limitations could result in serious injury or death.

- **The system is deactivated at speeds above 6 mph (10 km/h). It is reactivated at lower speeds.**
- **Inclement weather or ultrasonic sources such as an automatic car wash, a truck's compressed-air brakes or a pneumatic drill may affect the function of the system; this may include reduced performance or a false activation.**
- **The system is not designed to prevent contact with small or moving objects. Always move slowly. The system will not detect small objects below the bumper or on the ground.**
- **The system may not detect the following objects: fluffy objects such as snow, cloth, cotton, glass-wool, etc.; thin objects such as rope, wire and chain, etc.; or wedge-shaped objects.**
- **The system may not detect objects at speeds above 3 mph (5 km/h) and may not detect certain angular or moving objects.**
- **Do not attach stickers (including transparent material), install accessories, or apply anything blocking the sensors. These conditions may reduce the ability of the system.**

SYSTEM TEMPORARILY UNAVAILABLE

When sonar blockage is detected, the system will be deactivated automatically.

The system is not available until the conditions no longer exist.

The sonar sensors may be blocked by temporary ambient conditions such as splashing water, mist or fog. The blocked condition may also be caused by objects such as ice, frost or dirt obstructing the sonar sensors.

Action to take:

When the above conditions no longer exist, the system will resume automatically.

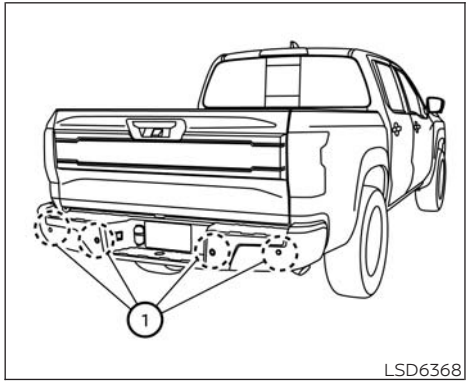

SYSTEM MAINTENANCE

The sonar sensors ① are located on the rear bumper. Always keep the area near the sonar sensors clean.

The sonar sensors may be blocked by temporary ambient conditions such as splashing water, mist or fog.

The blocked condition may also be caused by objects such as ice, frost or dirt obstructing the sonar sensors.

Check for and remove objects obstructing the area around the sonar sensors.

Do not attach stickers (including transparent material), install accessories or apply additional paint near the sonar sensors.

Do not strike or damage the area around the sonar sensors. It is recommended that you visit a NISSAN dealer if the area around the sonar sensors is damaged due to a collision.

BASIC INFORMATION

The Idling Stop System activates to prevent unnecessary fuel consumption, exhaust emissions and noise.

- When you stop the vehicle, the engine is turned off automatically.
- When you release the brake pedal to begin moving again, the engine is turned on automatically.

⚠ WARNING

The engine restarts if the vehicle moves at approximately 1 mph (2 km/h) or more (on a downhill grade, etc.) while the engine is turned off by the Idling Stop System. Depress the brake pedal immediately to stop the vehicle to prevent an accident.

⚠ CAUTION

- **At the end of the journey the engine must be stopped and ignition switch be pushed off. Lock the vehicle as normal. Pushing the ignition switch off will shut down all electrical systems. Failure to do this may result in a discharged battery.**

- **Place the ignition switch in the OFF position before opening the hood of performing any maintenance. Failure to do so may result in serious injuries due to automatic engine restart.**

NOTE:

The Idling Stop System will not activate under the following conditions:

- **When the vehicle is in TOW mode.**
- **When the 4LO mode switch is ON (After 4 hours from ignition OFF, the Idling Stop System reactivates. When the battery is removed, the Idling Stop System reactivates.).**
- **When the engine is kept idling without the vehicle being driven after the engine is turned on.**
- **When the engine coolant temperature is low.**
- **When the battery capacity is low.**
- **When the battery temperature is low.**
- **When the vehicle is moving.**
- **When a negative pressure booster decreases.**
- **When the engine hood is opened with the engine running.**
- **When the engine is turned on with the engine hood open.**
- **When the driver's seat belt is not fastened.**
- **When the driver's door is open.**
- **When the steering wheel is operated or the steering wheel was turned 45 degrees or more while the vehicle was stopped or just before it stopped.**
- **When the Idling Stop System indicator blinks at a low speed.**

  (When the Idling Stop System indicator blinks at a high speed (twice approximately every 1 second), be sure to check if the engine hood is open. When the engine hood is opened the engine will be in the normal stopped state. In this case, restart the engine with the ignition switch).

  (When the Idling Stop System indicator blinks at a low speed (once approximately every 2 seconds), have the system checked, and if necessary repaired, by a NISSAN dealer promptly).
- **When the fan speed control is in any position other than "OFF," (0) while the air flow control is in the front defroster position.**
- **When the front defroster switch is on.**
- **When the rear window defroster switch is on.**
- **When the temperature inside the vehicle is lower than approximately 68°F (20°C).**
- **When the temperature inside the vehicle is higher than approximately 86°F (30°C). (When the air conditioner is off, the Idling Stop System will operate.)**
- **When the fan speed of the air conditioner is set to the maximum speed.**
- **When the Idling Stop OFF switch is turned on.**
- **When the power consumption is large.**
- **When the altitude is high.**
- **When the accelerator pedal is depressed.**
- **When the shift lever is any range other than D (Drive).**
- **When the brake pedal is not firmly depressed.**
- **When stopping the vehicle on steep sloping roads.**

NOTE:

The engine will not restart even if the brake pedal is released while the Idling Stop System is activated under the following conditions:

- **When the engine hood is opened.**

NOTE:

It may take some time until the Idling Stop System activates under the following conditions:

- **When the battery is discharged.**
- **When the outside temperature is low or high.**
- **When the battery is replaced or the battery terminal is disconnected for extended periods and then reconnected.**

NOTE:

When the Idling Stop System indicator illuminates, the engine starts running automatically under at least one of the following conditions:

- **The driver's seat belt is unfastened, or the driver's door is open.**
- **The battery voltage becomes low (due to electrical load from other vehicle systems like headlights, heaters, etc., or auxiliary devices connected to the 12 volt socket inside the vehicle).**
- **The vehicle speed is above about 1 mph (2 km/h).**
- **When the rear window defroster is operated.**
- **When the temperature inside the vehicle is lower than approximately 68°F (20°C).**
- **When the temperature inside the vehicle is higher than approximately 86°F (30°C). (When the air conditioner is off, the Idling Stop System will operate.)**
- **When the front defroster is turned on.**
- **When more than 3 minutes have elapsed since the Idling Stop System was active.**
- **When the accelerator pedal is depressed.**
- **When the steering wheel is operated. (The steering wheel operation may become heavy, but this is not a malfunction.)**
- **When the battery capacity is low.**
- **When the power consumption is high.**
- **When the shift lever is any range other than D (Drive).**
- **When the Idling Stop OFF switch is pushed.**

NOTE:

The following condition will prevent the Idling Stop System from automatically restarting the engine. Starting the engine with the ignition switch operation is then necessary:

- **The hood is open.**

Use this system while waiting at a stop light, etc. When the vehicle is stopped for long periods of time, turn off the engine.

When the engine is stopped by the Idling Stop System, heating, cooling and dehumidifying functions will be deactivated. To avoid the air conditioning functions from being deactivated, turn off the Idling Stop System by pushing the Idling Stop OFF switch.

RETROGRADE MOVEMENT CONTROL FUNCTION

This system is designed to reduce the retrograde movement that occurs while the driver's foot changes from depressing the brake pedal to the accelerator pedal when moving the vehicle while the Idling Stop System is active on a hilly road.

IDLING STOP SYSTEM DISPLAY

The status of the Idling Stop System can be checked in the vehicle information display.

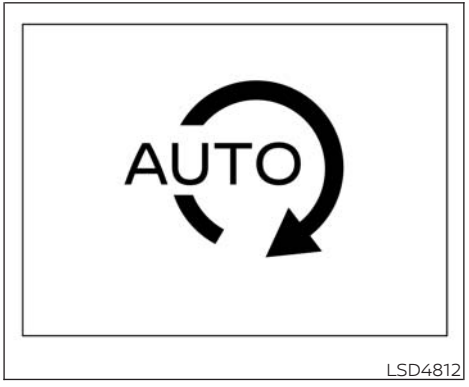

Idling Stop System indicator

The indicator is displayed when the Idling Stop System is activated.

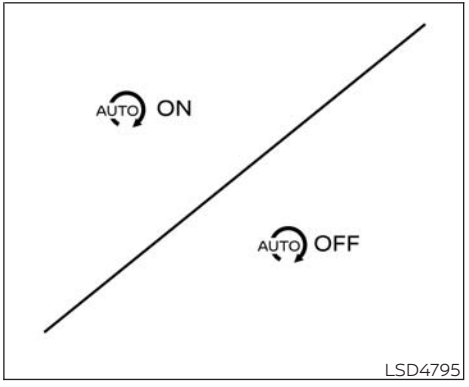

Idling Stop System ON or OFF

If the Idling Stop System is activated or deactivated using the Idling Stop OFF switch, the message is shown.

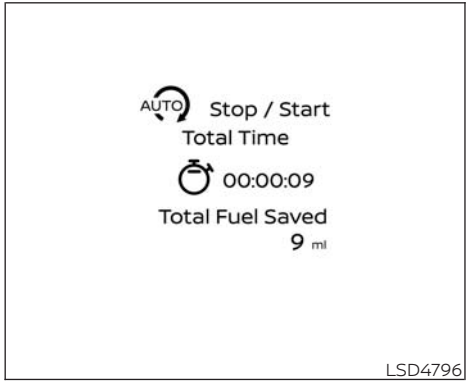

Fuel saved and engine stop time

The fuel saved and the engine stop time mode shows the following items:

- The fuel saved shows the estimated quantity of fuel that was saved by the Idling Stop System every time the engine is automatically stopped.
- The engine stop time shows the time that the engine has been stopped for by the Idling Stop System.

The total fuel saved and the engine stop time can also be checked in the vehicle information display. For additional information, see "Vehicle information display" (P. 124).

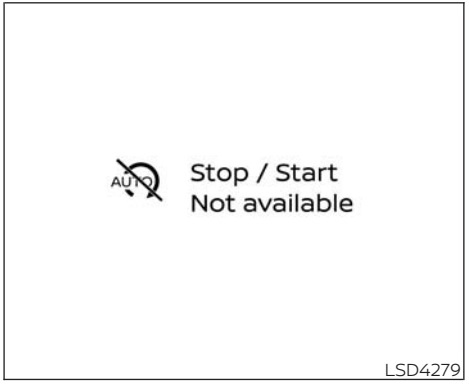

Auto start deactivation

If the engine stops when the Idling Stop System is activated and will not start automatically, the message is shown.

System fault

This message is displayed when the Idling Stop System is malfunctioning.

It is recommended that you have the system checked. It is recommended that you visit a NISSAN dealer for this service.

Idling Stop guidance display (further depressing the brake pedal)

When the vehicle is stopped, and the Idling Stop System screen is shown in the vehicle information display, the guidance is displayed if the Idling Stop system is deactivated due to not fully depressing the brake pedal.

If you wish to activate the Idling Stop system, further depress the brake pedal. For additional information, see "Idling Stop System" (P. 395).

The display appears when fuel saved and engine stop time is selected on the vehicle information display.

The display disappears under the following conditions:

- The Idling Stop system is activated.
- The vehicle starts running.

Idling Stop guidance display (detection of the steering operation)

When the vehicle is stopped, and the Idling Stop System screen is shown in the vehicle information display, the guidance is displayed if the Idling Stop system is deactivated since the steering operation is detected.

The Idling Stop system is deactivated due to steering operation being detected. For additional information, see "Idling Stop System" (P. 395).

The display appears when fuel saved and engine stop time is selected on the vehicle information display.

The display disappears under the following conditions:

- The Idling Stop system is activated.
- The vehicle starts running.

Idling Stop guidance display (placing priority on the air conditioner)

When the vehicle is stopped, and the Idling Stop System screen is shown in the vehicle information display, the guidance is displayed if the Idling Stop system is deactivated since the air conditioner (cooling, heating or dehumidifying functions) is given priority.

The Idling Stop system is deactivated since the air conditioner is given priority. For additional information, see "Idling Stop System" (P. 395).

The display appears when fuel saved and engine stop time is selected on the vehicle information display.

The display disappears under the following conditions:

- The Idling Stop system is activated.
- The vehicle starts running.

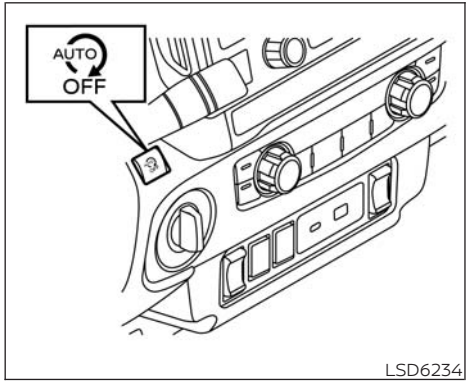

LSD6234

IDLING STOP OFF SWITCH

The system can be temporarily deactivated by pushing the Idling Stop OFF switch. Pushing the switch again or restarting the engine by using the ignition switch will reactivate the Idling Stop System.

- When the Idling Stop System is deactivated while the engine is running, the engine is prevented from automatically stopping.
- When the Idling Stop System is deactivated after the engine has been automatically stopped by the Idling Stop System, the engine will immediately restart if suitable conditions are present. The engine will then be prevented from automatically stopping during the same journey.

NOTE:

- **The Idling Stop System ON or OFF message is displayed for a few seconds in the vehicle information display when the Idling Stop System OFF switch is pushed. For additional information, see "Idling Stop System display" (P. 398).**
- **The Idling Stop System resets to ON every time the ignition switch is switched from the OFF position to the ON position.**
- **It is best to disable the ISS system when towing a trailer. You can do this by pushing the Idling Stop OFF switch.**

FREEING A FROZEN DOOR LOCK

To prevent a door lock from freezing, apply de-icer through the key hole. If the lock becomes frozen, heat the key before inserting it into the key hole or use the remote keyless entry key fob (if so equipped).

ANTIFREEZE

In the winter when it is anticipated that the temperature will drop below 32°F (0°C), check the antifreeze to assure proper winter protection. For additional information, see "Engine cooling system" (P. 434).

BATTERY

If the battery is not fully charged during extremely cold weather conditions, the battery fluid may freeze and damage the battery. To maintain maximum efficiency, the battery should be checked regularly. For additional information, see "Battery" (P. 445).

DRAINING OF COOLANT WATER

If the vehicle is to be left outside without antifreeze, drain the cooling system, including the engine block. Refill before operating the vehicle. For additional information, see "Changing engine coolant" (P. 435).

TIRE EQUIPMENT

1. SUMMER tires have a tread designed to provide superior performance on dry pavement. However, the performance of these tires will be substantially reduced in snowy and icy conditions. If you operate your vehicle on snowy or icy roads, NISSAN recommends the use of MUD & SNOW or ALL SEASON TIRES on all four wheels. It is recommended that you visit a NISSAN dealer for the tire type, size, speed rating and availability information.
2. For additional traction on icy roads, studded tires may be used. However, some U.S. states and Canadian provinces prohibit their use. Check local, state and provincial laws before installing studded tires.

   Skid and traction capabilities of studded snow tires on wet or dry surfaces may be poorer than that of non-studded snow tires.
3. Tire chains may be used. For additional information, see "Tire chains" (P. 469).

SPECIAL WINTER EQUIPMENT

It is recommended that the following items be carried in the vehicle during winter:

- A scraper and stiff-bristled brush to remove ice and snow from the windows and wiper blades.
- A sturdy, flat board to be placed under the jack to give it firm support.
- A shovel to dig the vehicle out of snowdrifts.
- Extra washer fluid to refill the windshield-washer fluid reservoir.

DRIVING ON SNOW OR ICE

⚠ WARNING

- **Wet ice (32°F, 0°C and freezing rain), very cold snow or ice can be slick and very hard to drive on. The vehicle will have much less traction or "grip" under these conditions. Try to avoid driving on wet ice until the road is salted or sanded.**
- **Whatever the condition, drive with caution. Accelerate and slow down with care. If accelerating or downshifting too fast, the drive wheels will lose even more traction.**
- **Allow more stopping distance under these conditions. Braking should be started sooner than on dry pavement.**
- **Allow greater following distances on slippery roads.**
- **Watch for slippery spots (glare ice). These may appear on an otherwise clear road in shaded areas. If a patch of ice is seen ahead, brake before reaching it. Try not to brake while on the ice, and avoid any sudden steering maneuvers.**
- **Do not use the cruise control on slippery roads.**
- **Snow can trap dangerous exhaust gases under your vehicle. Keep snow clear of the exhaust pipe and from around your vehicle.**

ENGINE BLOCK HEATER (if so equipped)

Engine block heaters are used to assist with cold temperature starting.

The engine block heater should be used when the outside temperature is 20°F (-7°C) or lower.

⚠ WARNING

- **Do not use your engine block heater with an ungrounded electrical system or a 2-pronged adapter. You can be seriously injured by an electrical shock if you use an ungrounded connection.**
- **Disconnect and properly store the engine block heater cord before starting the engine. Damage to the cord could result in an electrical shock and can cause serious injury.**
- **Use a heavy-duty 3-wire, 3-pronged extension cord rated for at least 10 A. Plug the extension cord into a Ground Fault Interrupt (GFI) protected, grounded 110-VAC outlet. Failure to use the proper extension cord or a grounded outlet can result in a fire or electrical shock and cause serious personal injury.**

To use the engine block heater:

1. Turn the engine off.
2. Open the hood and unwrap the engine block heater cord.
3. Plug the engine block heater cord into a grounded 3-wire, 3-pronged extension cord.
4. Plug the extension cord into a Ground Fault Interrupt (GFI) protected, grounded 110-volt AC (VAC) outlet.
5. The engine block heater must be plugged in for at least 2–4 hours, depending on outside temperatures, to properly warm the engine coolant. Use an appropriate timer to turn the engine block heater on.
6. Before starting the engine, unplug and properly store the cord to keep it away from moving parts.

⚠ CAUTION

Use of the engine block heater when parked with the front of the vehicle higher than the rear (5 degrees or more) may cause the engine block heater to become damaged and/or inoperative.

6 In case of emergency

Hazard warning flasher switch 406
Emergency engine shut off 406
Flat tire 407
Tire Pressure Monitoring System (TPMS) 407
Changing a flat tire 408
Jump starting 415
Push starting 417
If your vehicle overheats 417
Towing your vehicle 418
Basic information 418
Towing recommended by NISSAN 418
Vehicle recovery (freeing a stuck vehicle) 421

HAZARD WARNING FLASHER SWITCH

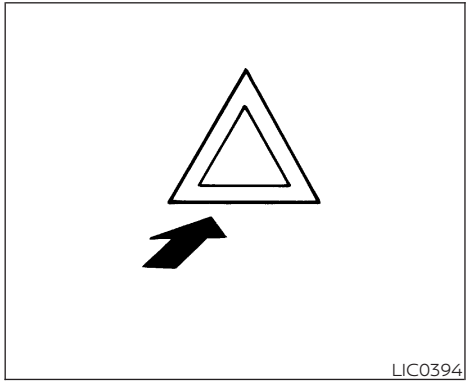

Push the switch on to warn other drivers when you must stop or park under emergency conditions. All turn signal lights flash.

⚠ WARNING

- **If stopping for an emergency, be sure to move the vehicle well off the road.**
- **Do not use the hazard warning flashers while moving on the highway unless unusual circumstances force you to drive so slowly that your vehicle might become a hazard to other traffic.**
- **Turn signals do not work when the hazard warning flasher lights are on.**

The flashers will operate with the ignition switch placed in any position.

Some jurisdictions may prohibit the use of the hazard warning flasher switch while driving.

EMERGENCY ENGINE SHUT OFF

To shut off the engine in an emergency situation while driving, perform the following procedure:

- Rapidly push the push-button ignition switch three consecutive times in less than 1.5 seconds, or
- Push and hold the push-button ignition switch for more than 2 seconds.

TIRE PRESSURE MONITORING SYSTEM (TPMS)

This vehicle is equipped with the Tire Pressure Monitoring System (TPMS). It monitors tire pressure of all tires except the spare. When the low tire pressure warning light is lit, and the "Tire Pressure Low - Add Air" warning appears in the vehicle information display, one or more of your tires is significantly under-inflated. If the vehicle is being driven with low tire pressure, the TPMS will activate and warn you of it by the low tire pressure warning light. This system will activate only when the vehicle is driven at speeds above 16 mph (25 km/h). For additional information, see "Warning lights, indicator lights and audible reminders" (P. 114) and "Tire Pressure Monitoring System (TPMS)" (P. 274).

⚠ WARNING

- **Radio waves could adversely affect electric medical equipment. Those who use a pacemaker should contact the electric medical equipment manufacturer for the possible influences before use.**
- **If the low tire pressure warning light illuminates while driving, avoid sudden steering maneuvers or abrupt braking, reduce vehicle speed, pull off the road to a safe location and stop the vehicle as soon as possible. Driving with under-inflated tires may permanently damage the tires and increase the likelihood of tire failure. Serious vehicle damage could occur and may lead to an accident and could result in serious personal injury. Check the tire pressure for all four tires. Adjust the tire pressure to the recommended COLD tire pressure shown on the Tire and Loading Information label to turn the low tire pressure warning light OFF. If the light still illuminates while driving after adjusting the tire pressure. a tire may be flat or the TPMS may be malfunctioning. If you have a flat tire, replace it with a spare tire as soon as possible. If no tire is flat and all tires are properly inflated, have the vehicle checked. It is recommended that you visit a NISSAN dealer for this service.**
- **When using a wheel without TPMS such as the spare tire, the TPMS will not function and the low tire pressure warning light will flash for approximately 1 minute. The light will remain on after 1 minute. Have your tires replaced and/or TPMS system reset as soon as possible. It is recommended that you visit a NISSAN dealer for these services.**
- **Replacing tires with those not originally specified by NISSAN could affect the proper operation of the TPMS.**
- **Do not inject any tire liquid or aerosol tire sealant into the tires, as this may cause a malfunction of the tire pressure sensors.**

CHANGING A FLAT TIRE

Basic information

If you have a flat tire, follow the instructions below:

Stopping the vehicle

1. Safely move the vehicle off the road and away from traffic.
2. Turn on the hazard warning flashers.
3. Park on a level surface and apply the parking brake. Move the shift lever to P (Park).
4. Turn off the engine.
5. Raise the hood to warn other traffic and to signal professional road assistance personnel that you need assistance.
6. Have all passengers get out of the vehicle and stand in a safe place, away from traffic and clear of the vehicle.

⚠ WARNING

- **Make sure the parking brake is securely applied and the shift lever is shifted into P (Park).**
- **Never change tires when the vehicle is on a slope, ice or slippery areas. This is hazardous.**
- **Never change tires if oncoming traffic is close to your vehicle. Wait for professional road assistance.**

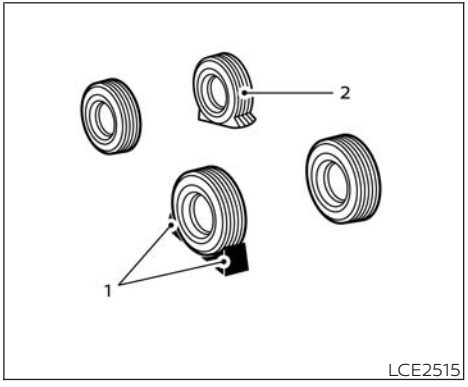

1. Blocks
2. Flat tire

Blocking wheels

Place suitable blocks at both the front and back of the wheel diagonally opposite the flat tire to prevent the vehicle from moving when it is jacked up.

⚠ WARNING

Be sure to block the wheel as the vehicle may move and result in personal injury.

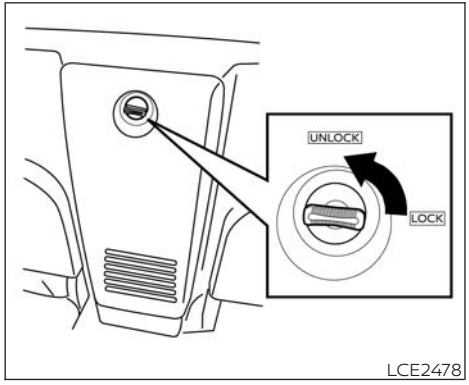

LCE2478

Getting the spare tire and tools (King Cab® models)

The tool storage compartment is located between the two rear jump seats.

1. Turn the knob from the lock to the unlock position and remove the lid from the tool storage compartment.

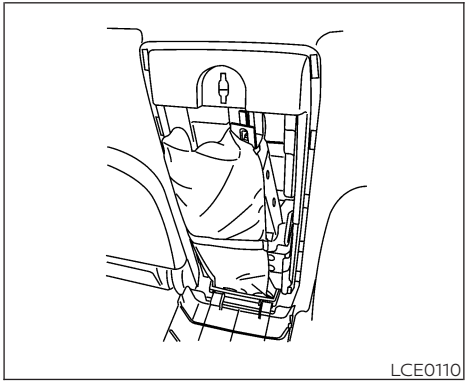
LCE0110

2. Release the strap to remove the tool bag.

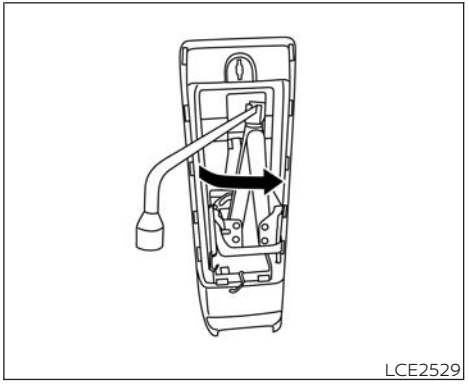
LCE2529

3. Collapse the jack to remove it from the storage location by inserting the wheel nut wrench into the jack screw at the top of the jack as shown. Turn the wheel-nut wrench counterclockwise as shown until the jack screw becomes loose. Then loosen the jack with your fingers until it becomes free.
4. Remove the jack.
5. To reinstall the jack and tools, reverse steps 1 to 4.

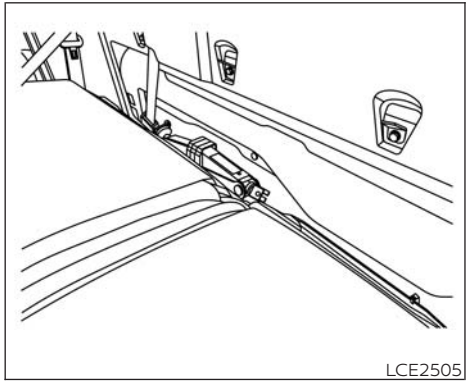

Getting the spare tire and tools (Crew Cab models)

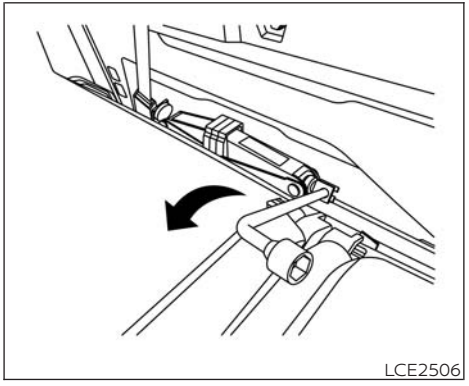

The tools and tool bag are located behind the rear bench seat.

1. Remove the head restraints/headrests and fold the rear bench seat down. For additional information, see "Folding the rear bench seat down" (P. 18).
2. Remove the tool bag and locate the wheel-nut wrench.
3. Collapse the jack to remove it from the storage location by inserting the wheel-nut wrench into the jack screw as shown and turning the wheel-nut wrench towards you until the jack becomes loose. Then loosen the jack screw with your fingers until it is free.
4. Remove the jack from behind the seat.
5. To reinstall the jack and tools, reverse steps 1 to 4.

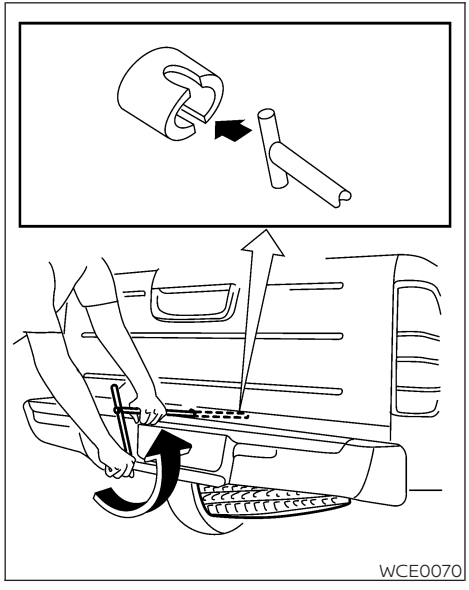

Getting the spare tire and tools (All models)

1. Seat the T-shaped end of the jacking rod into the T-shaped opening of the spare tire winch. Apply pressure to keep the jacking rod engaged in the spare tire winch and turn the jacking rod counterclockwise to lower the spare tire.

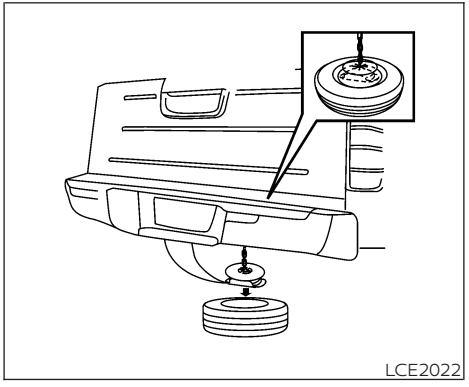

2. Once the spare tire is completely lowered, reach under the vehicle, remove the retainer chain, and carefully slide the tire from under the rear of the vehicle.
3. To reinstall the wheel, remove the center cap and insert the tire chain through the wheel. Be sure the rubber spacer is centered on the wheel before lifting. Use the assembled jacking rod to slowly rotate the winch clockwise to raise the wheel to the vehicle.

NOTE:

Inspect the spacer every six years and replace as necessary. It is recommended that you visit a NISSAN dealer for this service.

⚠ CAUTION

- **Be sure to center the spare tire suspending plate on the wheel and then lift the spare tire.**
- **Failure to use the spacer may allow the chain to get stuck on the wheel nut holes.**

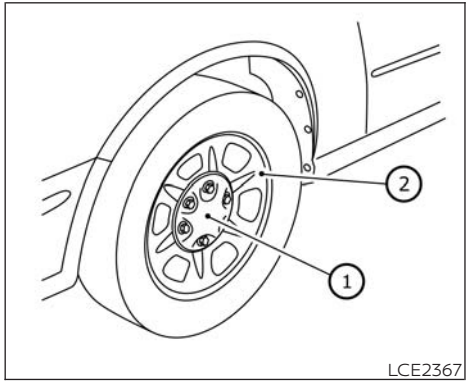

Removing bolt-on wheel caps (if so equipped)

⚠CAUTION

Do not use your hands to pry off wheel caps or wheel covers. Doing so could result in personal injury.

The wheel cap ① is only attached with the wheel nuts and is separate from the wheel ②.

To remove the wheel cap, remove the wheel nuts after the jack is securely supporting the vehicle and the tire clears the ground.

For additional information, see "Jacking up vehicle and removing the damaged tire" (P. 412).

Take care not to scratch the wheel cap or wheel surface.

Jacking up vehicle and removing the damaged tire

⚠WARNING

- **Never get under the vehicle while it is supported only by the jack. If it is necessary to work under the vehicle, support it with safety stands.**
- **Use only the jack provided with your vehicle to lift the vehicle. Do not use the jack provided with your vehicle on other vehicles. The jack is designed for lifting only your vehicle during a tire change.**
- **Use the correct jack-up points. Never use any other part of the vehicle for jack support.**
- **Never jack up the vehicle more than necessary.**
- **Never use blocks on or under the jack.**
- **Do not start or run the engine while vehicle is on the jack. It may cause the vehicle to move. This is especially true for vehicles with limited slip differentials.**
- **Do not allow passengers to stay in the vehicle while it is on the jack.**
- **Never run the engine with a wheel(s) off the ground. It may cause the vehicle to move.**

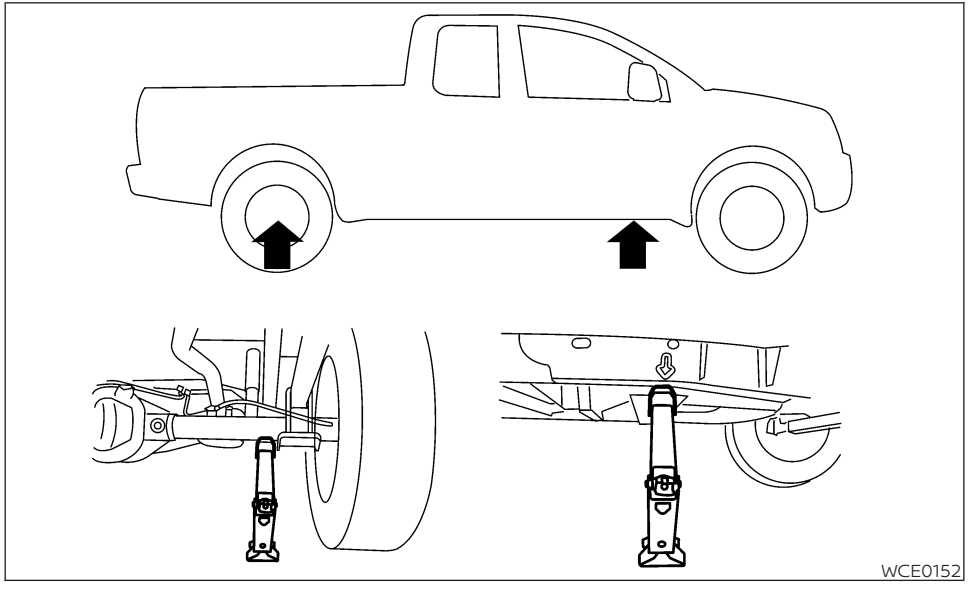

Always refer to the illustration for the correct placement and jack-up points for your specific vehicle model and jack type.

Carefully read the caution label attached to the jack body and the following instructions.

1. Loosen each wheel nut 1 or 2 turns by turning counterclockwise with the wheel nut wrench. **Do not remove the wheel nuts until the tire is off the ground.**
2. Place the jack directly under the jack-up point as illustrated so the top of the jack contacts the vehicle at the jack-up point. Align the jack head under the arrow stamped on the side of the frame or rear as shown.

   The jack should be used on firm and level ground.

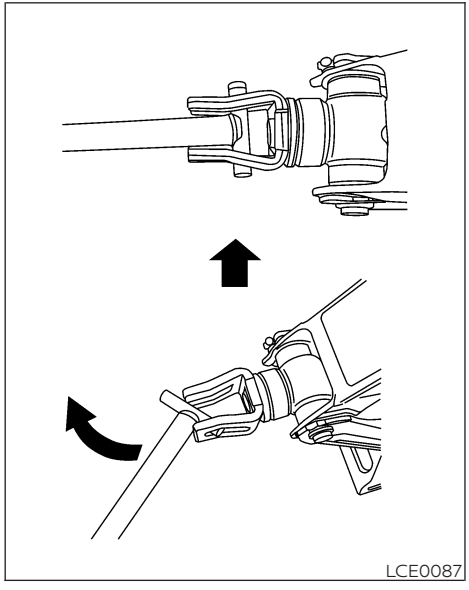

3. Install the assembled jacking rod into the jack as shown.
4. To lift the vehicle, securely hold the jacking lever and rod. Carefully raise the vehicle until the tire clears the ground.
5. Remove the wheel nuts and then remove the tire.

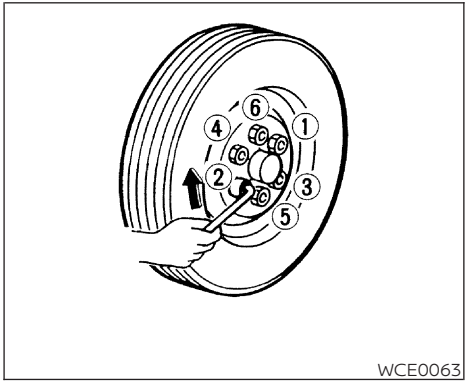

Installing the spare tire

The spare tire is designed for emergency use. For additional information, see "Wheels and tires" (P. 461).

1. Clean any mud or dirt from the surface between the wheel and hub.
2. Carefully put the spare tire on and tighten the wheel nuts finger tight.
3. With the wheel nut wrench, tighten wheel nuts alternately and evenly in the sequence illustrated (①,②,③,④,⑤,⑥) until they are tight.
4. Lower the vehicle slowly until the tire touches the ground. Then, with the wheel nut wrench, tighten the wheel nuts securely in the sequence illustrated (①,②,③,④,⑤,⑥). Lower the vehicle completely .

⚠ WARNING

- **Incorrect wheel nuts or improperly tightened wheel nuts can cause the wheel to become loose or come off. This could cause an accident.**
- **Do not use oil or grease on the wheel studs or nuts. This could cause the nuts to become loose.**
- **Retighten the wheel nuts when the vehicle has been driven for 620 miles (1,000 km) (also in cases of a flat tire, etc.).**

As soon as possible, tighten the wheel nuts to the specified torque with a torque wrench.

Wheel nut tightening torque:
98 ft-lb (133 N·m)

The wheel nuts must be kept tightened to specification at all times. It is recommended that wheel nuts be tightened to specifications at each lubrication interval.

Adjust tire pressure to the COLD pressure.

COLD pressure: After vehicle has been parked for 3 hours or more or driven less than 1 mile (1.6 km).

COLD tire pressures are shown on the Tire and Loading Information label located in the driver's door opening.

5. Securely store the jacking equipment in the vehicle and the flat tire under the vehicle. For additional information about storing the flat tire, see "Getting the spare tire and tools (all models)" (P. 411).

⚠ WARNING

- **Always make sure that the spare tire and jacking equipment are properly secured after use. Such items can become dangerous projectiles in an accident or sudden stop.**
- **The spare tire is designed for emergency use. For additional information, see "Wheels and tires" (P. 461).**

To start your engine with a booster battery, the instructions and precautions below must be followed.

⚠ WARNING

- **If done incorrectly, jump starting can lead to a battery explosion, resulting in severe injury or death. It could also damage your vehicle.**
- **Explosive hydrogen gas is always present in the vicinity of the battery. Keep all sparks and flames away from the battery.**
- **Do not allow battery fluid to come into contact with eyes, skin, clothing or painted surfaces. Battery fluid is a corrosive sulfuric acid solution which can cause severe burns. If the fluid should come into contact with anything, immediately flush the contacted area with water.**
- **Keep battery out of the reach of children.**
- **The booster battery must be rated at 12 volts. Use of an improperly rated battery can damage your vehicle.**
- **Whenever working on or near a battery, always wear suitable eye protectors (for example, goggles or industrial safety spectacles) and remove rings, metal bands, or any other jewelry. Do not lean over the battery when jump starting.**
- **Do not attempt to jump start a frozen battery. It could explode and cause serious injury.**
- **Your vehicle has an automatic engine cooling fan. It could come on at any time. Keep hands and other objects away from it.**

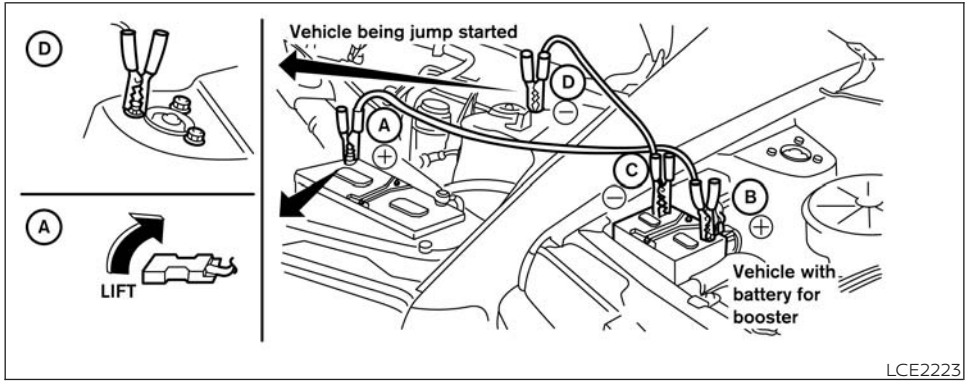

⚠ WARNING

Always follow the instructions below. Failure to do so could result in damage to the charging system and cause personal injury.

1. If the booster battery is in another vehicle, position the two vehicles to bring their batteries near each other.

   Do not allow the two vehicles to touch.

2. Apply the parking brake. Move the shift lever to the P (Park). Switch off all unnecessary electrical systems (lights, heater, air conditioner, etc.).
3. Place the ignition switch to the LOCK or OFF position.
4. Connect the jumper cables in the sequence illustrated (Ⓐ, Ⓑ, Ⓒ, Ⓓ).

⚠ CAUTION

- **Always connect positive (+) to positive (+) and negative (–) to body ground (for example, strut mounting bolt, engine lift bracket, etc.) — not to the battery.**
- **Make sure the jumper cables do not touch moving parts in the engine compartment and that the cable clamps do not contact any other metal.**

5. Start the engine of the booster vehicle and let it run for a few minutes.
6. Keep the engine speed of the booster vehicle at about 2,000 rpm and start the engine of the vehicle being jump started.

⚠ CAUTION

Do not keep the starter motor engaged for more than 10 seconds. If the engine does not start right away, place the ignition switch in the OFF position and wait 3 to 4 seconds before trying again.

7. After starting the engine, carefully disconnect the negative cable and then the positive cable.

PUSH STARTING

⚠ CAUTION

- **Do not push start this vehicle. The three-way catalyst may be damaged.**
- **Automatic transmission models cannot be push-started or tow-started. Attempting to do so may cause transmission damage.**

NOTE:

For automatic transmission models, the Malfunction Indicator Light (MIL) may turn on when low voltage is detected. This does not affect driving functions. The MIL will turn off when voltage returns to a normal value (>12V) and the engine is started three or more times.

IF YOUR VEHICLE OVERHEATS

⚠ WARNING

- **Do not continue to drive if your vehicle overheats. Doing so could cause engine damage or a vehicle fire.**
- **To avoid the danger of being scalded, never remove the radiator or coolant reservoir cap while the engine is still hot. When the radiator or coolant reservoir cap is removed, pressurized hot water will spurt out, possibly causing serious injury.**
- **Do not open the hood if steam is coming out.**

If your vehicle is overheating (indicated by an extremely high temperature gauge reading), or if you feel a lack of engine power, detect abnormal noise, etc. take the following steps.

1. Move the vehicle safely off the road, apply the parking brake and move the shift lever to P (Park).

   Do not stop the engine.

2. Turn off the air conditioner. Open all the windows, move the heater or air conditioner temperature control to maximum hot and fan control to high speed.
3. Get out of the vehicle. Look and listen for steam or coolant escaping from the radiator before opening the hood. If steam or coolant is escaping, turn off the engine. Do not open the hood further until no steam or coolant can be seen.
4. Open the engine hood.

⚠ WARNING

If steam or water is coming from the engine, stand clear to prevent getting burned.

5. Visually check drive belts for damage or looseness. Also check if the cooling fan is running. The radiator hoses and radiator should not leak water. If coolant is leaking, the water pump belt is missing or loose, or the cooling fan does not run, stop the engine.

⚠ WARNING

Be careful not to allow your hands, hair, jewelry or clothing to come into contact with, or get caught in, engine belts or the engine cooling fan. The engine cooling fan can start at any time.

6. After the engine cools down, check the coolant level in the engine coolant reservoir tank with the engine running. Add coolant to the engine coolant reservoir tank if necessary. Have your vehicle repaired. It is recommended that you visit a NISSAN dealer for this service.

BASIC INFORMATION

When towing your vehicle, all jurisdictional and local regulations for towing must be followed. Incorrect towing equipment could damage your vehicle. Towing instructions are available from a NISSAN dealer. Local service operators are generally familiar with the applicable laws and procedures for towing. To assure proper towing and to prevent accidental damage to your vehicle, NISSAN recommends having a service operator tow your vehicle. It is advisable to have the service operator carefully read the following precautions:

⚠ WARNING

- **Never ride in a vehicle that is being towed.**
- **Never get under your vehicle after it has been lifted by a tow truck.**

⚠ CAUTION

- **When towing, make sure that the transmission, axles, steering system and powertrain are in working condition. Use dollies or flatbed if any of the listed systems are not working.**
- **Always attach safety chains before towing.**

For additional information, see "Flat towing — 4WD with automatic transmission " (P. 540) or "Flat towing — 2WD with automatic transmission" (P. 540).

TOWING RECOMMENDED BY NISSAN

Basic information

NISSAN recommends towing your vehicle based upon the type of drivetrain. For additional information, refer to the diagrams in this section to ensure that your vehicle is properly towed.

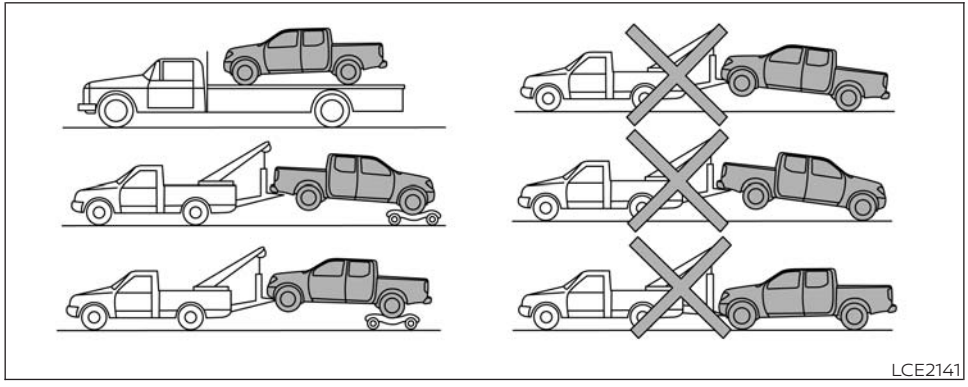

Four-Wheel Drive (4WD) models with automatic transmission

NISSAN recommends that towing dollies be used when towing your vehicle or place the vehicle on a flatbed truck as illustrated.

⚠ CAUTION

Never tow 4WD models equipped with an automatic transmission with any of the wheels on the ground as this may cause serious and expensive damage to the transfer case and transmission.

NOTE:

If the battery is completely drained the transmission will not manually shift to other positions.

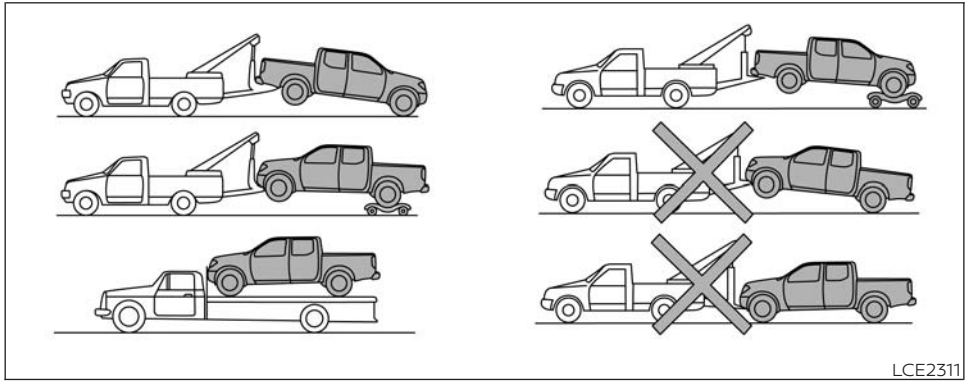

Two-Wheel Drive models with automatic transmission

NISSAN recommends that your vehicle be towed with the driving (rear) wheels off the ground or place the vehicle on a flatbed truck as illustrated.

⚠ CAUTION

- **Never tow automatic transmission models with the rear wheels on the ground or four wheels on the ground (forward or backward), as this may cause serious and expensive damage to the transmission. If it is necessary to tow the vehicle with the front wheels raised always use towing dollies under the rear wheels.**
- **When towing automatic transmission models with the front wheels on the ground or on towing dollies:**
  - **Place the ignition switch in the OFF position and secure the steering wheel in a straight-ahead position with a rope or similar device. Never secure the steering wheel by placing the ignition switch in the LOCK position. This may cause damage to the steering lock mechanism (for models with a steering lock mechanism).**

NOTE:

If the battery is completely drained the transmission will not manually shift to other positions.

VEHICLE RECOVERY (freeing a stuck vehicle)

Basic information

There are two options to recover a stuck vehicle: pulling and rocking. For additional information regarding these options, please refer to the following sections.

Pulling a stuck vehicle

⚠ WARNING

To avoid vehicle damage, serious personal injury or death when recovering a stuck vehicle:

- **Contact a professional towing service to recover the vehicle if you have any questions regarding the recovery procedure.**
- **Attach recovery devices only to main structural members of the vehicle or the recovery hooks (if so equipped).**
- **Do not use the vehicle tie-downs to tow or free a stuck vehicle.**
- **Only use devices specifically designed for vehicle recovery and follow the manufacturer's instructions.**
- **Always pull the recovery device straight out from the front of the vehicle. Never pull at an angle.**
- **Route recovery devices so they do not touch any part of the vehicle except the attachment point.**

If your vehicle is stuck in sand, snow, mud, etc., use a tow strap or other device designed specifically for vehicle recovery. Always follow the manufacturer's instructions for the recovery device.

Rocking a stuck vehicle

⚠ WARNING

- **Stand clear of a stuck vehicle.**
- **Do not spin your tires at high speed. This could cause them to explode and result in serious injury. Parts of your vehicle could also overheat and be damaged.**

If your vehicle is stuck in sand, snow, mud, etc., use the following procedure:

1. Turn off the Vehicle Dynamic Control (VDC) system.
2. Make sure the area in front and behind the vehicle is clear of obstructions.
3. Turn the steering wheel right and left to clear an area around the front tires.
4. Slowly rock the vehicle forward and backward.
   - Shift back and forth between R (Reverse) and D (Drive).
   - Apply the accelerator as little as possible to maintain the rocking motion.
   - Release the accelerator pedal before shifting between R (Reverse) and D (Drive).
   - Do not spin the tires above 34 mph (55 km/h).
5. If the vehicle cannot be freed after a few tries, contact a professional towing service to remove the vehicle.

MEMO

7 Appearance and care

Cleaning exterior 424
Basic information 424
Washing 424
Waxing 425
Removing spots 425
Underbody 425
Glass 425
Aluminum alloy wheels (if so equipped) 425
Chrome parts 426
Tire dressings 426
Cleaning interior 426
Basic information 426
Air fresheners 427
Power moonroof (if so equipped) 427
Floor mats (if so equipped) 428
Seat belts 429
Corrosion protection 429
Most common factors contributing to vehicle corrosion 429
Environmental factors influence the rate of corrosion 429
Protect your vehicle from corrosion 430

BASIC INFORMATION

In order to maintain the appearance of your vehicle, it is important to take proper care of it.

To protect the paint surfaces, wash your vehicle as soon as you can:

- After a rainfall to prevent possible damage from acid rain.
- After driving on coastal roads.
- When contaminants such as soot, bird droppings, tree sap, metal particles or bugs get on the paint surface.
- When dust or mud builds up on the surface.

Whenever possible, store or park your vehicle inside a garage or in a covered area.

When it is necessary to park outside, park in a shady area or protect the vehicle with a body cover.

Be careful not to scratch the paint surface when putting on or removing the body cover.

WASHING

Wash dirt off with a wet sponge and plenty of water. Clean the vehicle thoroughly using a mild soap, a special vehicle soap or general purpose dishwashing liquid mixed with clean, lukewarm (never hot) water.

⚠ CAUTION

- **Do not concentrate water spray directly on the sonar sensors (if so equipped) on the bumper as this will result in damage to the sensors. Do not use pressure washers capable of spraying water over 1,200 psi (8,274 kPa) to wash your vehicle. Use of high-pressure washers over 1,200 psi (8,274 kPa) can result in damage to or removal of paint or graphics. Avoid using a high-pressure washer closer than 12 inches (30 cm) to the vehicle. Always use a wide-angle nozzle only, keep the nozzle moving and do not concentrate the water spray on any one area.**
- **Do not use car washes that use acid in the detergent. Some car washes, especially brushless ones, use some acid for cleaning. The acid may react with some plastic vehicle components, causing them to crack. This could affect their appearance, and also could cause them not to function properly. Always check with your car wash to confirm that acid is not used.**
- **Do not wash the vehicle with strong household soap, strong chemical detergents, gasoline or solvents.**
- **Do not wash the vehicle in direct sunlight or while the vehicle body is hot, as the surface may become water-spotted.**
- **Avoid using tight-napped or rough cloths, such as washing mitts. Care must be taken when removing caked-on dirt or other foreign substances so the paint surface is not scratched or damaged.**

Rinse the vehicle thoroughly with plenty of clean water.

Inside edges, seams and folds on the doors, hatches and hood are particularly vulnerable to the effects of road salt. Therefore, these areas must be cleaned regularly. Take care that the drain holes in the lower edge of the door are open. Spray water under the body and in the wheel wells to loosen the dirt and wash away road salt.

A damp chamois can be used to dry the vehicle to avoid water spots.

WAXING

Regular waxing protects the paint surface and helps retain new vehicle appearance. Polishing is recommended to remove built-up wax residue and to avoid a weathered appearance before re-applying wax.

A NISSAN dealer can assist you in choosing the proper product.

- Wax your vehicle only after a thorough washing. Follow the instructions supplied with the wax.
- Do not use a wax containing any abrasives, cutting compounds or cleaners that may damage the vehicle finish.

Machine compounding or aggressive polishing on a base coat/clear coat paint finish may dull the finish or leave swirl marks.

REMOVING SPOTS

Remove tar and oil spots, industrial dust, insects, and tree sap as quickly as possible from the surface of the paint to avoid lasting damage or staining. Special cleaning products are available at a NISSAN dealer or any automotive accessory store. It is recommended that you visit a NISSAN dealer for these products.

UNDERBODY

In areas where road salt is used in winter, it is necessary to clean the underbody regularly in order to prevent dirt and salt from building up and causing the acceleration of corrosion on the underbody and suspension. Before the winter period and again in the spring, the underseal must be checked and, if necessary, re-treated.

GLASS

Use glass cleaner to remove smoke and dust film from the glass surfaces. It is normal for glass to become coated with a film after the vehicle is parked in the hot sun. Glass cleaner and a soft cloth will easily remove this film.

⚠ CAUTION

When cleaning the inside of the windows, do not use sharp-edged tools, abrasive cleaners or chlorine-based disinfectant cleaners. They could damage the electrical conductors, radio antenna elements or rear window defroster elements.

ALUMINUM ALLOY WHEELS (if so equipped)

Wash the wheels regularly with a sponge dampened in a mild soap solution, especially during winter months in areas where road salt is used. If not removed, road salt can discolor the wheels.

⚠ CAUTION

Follow the directions below to avoid staining or discoloring the wheels:

- **Do not use a cleaner that uses strong acid or alkali contents to clean the wheels.**
- **Do not apply wheel cleaners to the wheels when they are hot. The wheel temperature should be the same as ambient temperature.**

- **Rinse the wheel to completely remove the cleaner within 15 minutes after the cleaner is applied.**

CHROME PARTS

Clean all chrome parts regularly with a non-abrasive chrome polish to maintain the finish.

⚠ CAUTION

Follow the directions below to avoid staining or discoloring the chrome parts:

- **Do not use a cleaner that uses strong acid or alkali contents to clean the chrome parts.**

TIRE DRESSINGS

NISSAN does not recommend the use of tire dressings. Tire manufacturers apply a coating to the tires to help reduce discoloration of the rubber. If a tire dressing is applied to the tires, it may react with the coating and form a compound. This compound may come off the tire while driving and stain the vehicle paint.

If you choose to use a tire dressing, take the following precautions:

- Use a water-based tire dressing. The coating on the tire dissolves more easily than with an oil-based tire dressing.
- Apply a light coat of tire dressing to help prevent it from entering the tire tread/grooves (where it would be difficult to remove).
- Wipe off excess tire dressing using a dry towel. Make sure the tire dressing is completely removed from the tire tread/grooves.
- Allow the tire dressing to dry as recommended by the tire dressing manufacturer.

BASIC INFORMATION

Occasionally remove loose dust from the interior trim, plastic parts and seats using a vacuum cleaner or soft bristled brush. Wipe the vinyl and leather (if so equipped) surfaces with a clean, soft cloth dampened in mild soap solution, then wipe clean with a dry, soft cloth.

Regular care and cleaning is required in order to maintain the appearance of the leather (if so equipped).

Before using any fabric protector, read the manufacturer's recommendations. Some fabric protectors contain chemicals that may stain or bleach the seat material.

Use a cloth dampened only with water to clean the meter and gauge lens.

⚠ WARNING

- **Do not use wax or silicone based products in the interior of the vehicle. Doing so may cause damage to interior parts, electrical devices, or electronics.**

- **Do not use water or acidic cleaners (hot steam cleaners) on the seat. This can damage the seat or occupant classification sensor. This can also affect the operation of the air bag system and result in serious personal injury.**

⚠ CAUTION

- **Never use benzine, thinner or any similar material.**
- **Small dirt particles can be abrasive and damaging to leather surfaces and should be removed promptly. Do not use saddle soap, car waxes, polishes, oils, cleaning fluids, solvents, detergents or ammonia-based cleaners as they may damage the leather's natural finish.**
- **Never use fabric protectors unless recommended by the manufacturer.**
- **Do not use glass or plastic cleaner on meter or gauge lens covers. It may damage the lens cover.**
- **Never use chloride solutions for cleaning aluminum decoratives (if so equipped), damage may occur.**

AIR FRESHENERS

Most air fresheners use a solvent that could affect the vehicle interior. If you use an air freshener, take the following precautions:

- Hanging-type air fresheners can cause permanent discoloration when they contact vehicle interior surfaces. Place the air freshener in a location that allows it to hang free and not contact an interior surface.
- Liquid-type air fresheners typically clip on the vents. These products can cause immediate damage and discoloration when spilled on interior surfaces.

Carefully read and follow the manufacturer's instructions before using the air fresheners.

POWER MOONROOF (if so equipped)

The sunshade is made from a tricot material.

⚠ CAUTION

To help prevent damaging the moonroof while cleaning:

- **Do not rub the material with a cloth. Doing so can damage the surface of the material or cause a stain to spread.**
- **Never use benzine, thinner or any similar chemical to clean the sunshade. This may discolor the moonroof and damage the surface.**
- **Clean water based stains by patting the surface with a clean soft cloth dampened in warm water. Press a clean dry cloth onto the surface to remove as much dampness as possible and then let air dry.**
- **Clean oil based stains by patting the surface with a clean soft cloth dampened in warm water. Press a clean dry cloth onto the surface to remove as much dampness as possible and then let air dry.**

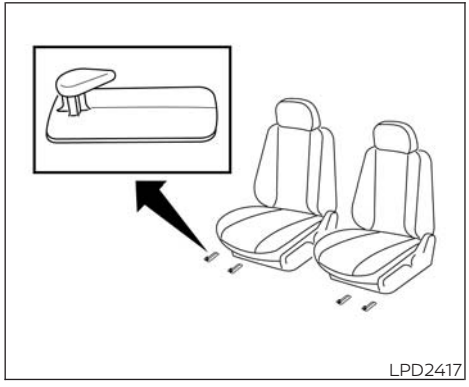

FLOOR MATS (if so equipped)

Basic information

⚠ WARNING

To avoid potential pedal interference that may result in a collision, injury or death:

- **NEVER place a floor mat on top of another floor mat in the driver front position or install them upside down or backwards.**
- **Use only Genuine NISSAN floor mats, or equivalent floor mats, that are specifically designed for use in your vehicle model and model year.**
- **Properly position the mats in the floorwell using the floor mat positioning hook. For additional information, see "Floor mat installation" (P. 428).**
- **Make sure the floor mat does not interfere with pedal operation.**
- **Periodically check the floor mats to make sure they are properly installed.**
- **After cleaning the vehicle interior, check the floor mats to make sure they are properly installed.**

The use of Genuine NISSAN floor mats can extend the life of your vehicle carpet and make it easier to clean the interior. Mats should be maintained with regular cleaning and replaced if they become excessively worn.

Floor mat installation

Your vehicle is equipped with floor mat positioning hook(s). The number and shape of the floor mat positioning hooks for each seating position varies depending on the vehicle.

When installing Genuine NISSAN floor mats, follow the installation instructions provided with the mat and the following:

1. With the ignition switch in the OFF position, the shift lever in P (Park) position and with the parking brake fully applied, position the floor mat in the floorwell so that the floor mat grommet holes are aligned with the hook(s).
2. Secure the grommet holes into the hook(s) and ensure that the floor mat is properly positioned.
3. Make sure the floor mat does not interfere with pedal operation. With the ignition switch still in the OFF position, the shift lever in the P (Park) position and with the parking brake applied, fully apply and release all pedals. The floor mat must not interfere with pedal operation or prevent the pedal from returning to its normal position.

It is recommended that you visit a NISSAN dealer for details about installing the floor mats in your vehicle.

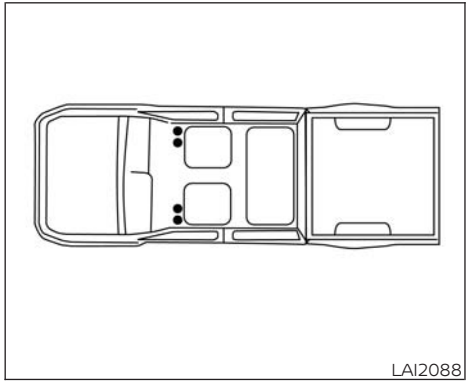

Positioning hooks

The illustration shows the location of the floor mat positioning hooks.

SEAT BELTS

The seat belts can be cleaned by wiping them with a sponge dampened in a mild soap solution. Allow the belts to dry completely in the shade before using them. For additional information, see "Seat belt maintenance" (P. 32).

⚠WARNING

Do not allow wet seat belts to roll up in the retractor. NEVER use bleach, dye or chemical solvents to clean the seat belts, since these materials may severely weaken the seat belt webbing.

MOST COMMON FACTORS CONTRIBUTING TO VEHICLE CORROSION

Most vehicle corrosion is caused by:

- The accumulation of moisture-retaining dirt and debris in body panel sections, cavities, and other areas.
- Damage to paint and other protective coatings caused by gravel and stone chips or minor traffic collisions.

ENVIRONMENTAL FACTORS INFLUENCE THE RATE OF CORROSION

Moisture

Accumulation of sand, dirt and water on the vehicle body underside can accelerate corrosion. Wet floor coverings will not dry completely inside the vehicle and should be removed for drying to avoid floor panel corrosion.

Relative humidity

Corrosion will be accelerated in areas of high relative humidity, especially those areas where the temperatures stay above freezing and where atmospheric pollution exists and road salt is used.

Temperature

High temperatures accelerate the rate of corrosion to those parts which are not well ventilated.

Air pollution

Industrial pollution, the presence of salt in the air in coastal areas, or heavy road salt use accelerates the corrosion process. Road salt also accelerates the disintegration of paint surfaces.

PROTECT YOUR VEHICLE FROM CORROSION

- Wash and wax your vehicle often to keep the vehicle clean.
- Always check for minor damage to the paint and repair it as soon as possible.
- Keep drain holes at the bottom of the doors open to avoid water accumulation.
- Check the underbody for accumulation of sand, dirt or salt. If present, wash with water as soon as possible.

⚠ CAUTION

- **NEVER remove dirt, sand or other debris from the passenger compartment by washing it out with a hose. Remove dirt with a vacuum cleaner or broom.**
- **Never allow water or other liquids to come in contact with electronic components inside the vehicle as this may damage them.**

Chemicals used for road surface de-icing are extremely corrosive. They accelerate corrosion and deterioration of underbody components such as the exhaust system, fuel and brake lines, brake cables, floor pan and fenders.

In winter, the underbody must be cleaned periodically.

For additional protection against rust and corrosion, which may be required in some areas, it is recommended that you consult a NISSAN dealer.

8 Do-it-yourself

Maintenance precautions 432
Engine compartment check locations 433
Engine cooling system 434
Basic information 434
Checking engine coolant level 435
Changing engine coolant 435
Engine oil 436
Checking engine oil level 436
Changing engine oil and oil filter 437
Automatic Transmission Fluid (ATF) 442
Power Steering Fluid (PSF) 442
Brake fluid 443
Basic information 443
Brake fluid 443
Windshield-washer fluid 443
Windshield-washer fluid reservoir 443
Battery 445
Basic information 445
Jump starting 446
Variable voltage control system 447
Drive belt 447
Spark plugs 448
Replacing spark plugs 448
Air cleaner 449
Basic information 449
In-cabin microfilter (if so equipped) 449
Windshield wiper blades 450
Cleaning 450
Replacing 450
Brakes 451
Basic information 451
Self-adjusting brakes 451
Brake pad wear indicators 451
Fuses 452
Basic information 452
Engine compartment 452
Passenger compartment 454
Intelligent Key battery replacement 454
Basic information 454
NISSAN Intelligent Key® 455
Lights 457
Headlights 457
Fog lights (if so equipped) 457
Exterior and interior lights 458
Wheels and tires 461
Basic information 461
Tire pressure 461
Tire labeling 465
Types of tires 468
Tire chains 469
Changing wheels and tires 470

MAINTENANCE PRECAUTIONS

When performing any inspection or maintenance work on your vehicle, always take care to prevent serious accidental injury to yourself or damage to the vehicle. The following are general precautions which should be closely observed.

⚠ WARNING

- **Park the vehicle on a level surface, apply the parking brake securely and block the wheels to prevent the vehicle from moving. Move the shift lever to P (Park).**
- **Be sure the ignition switch is in the OFF or LOCK position when performing any parts replacement or repairs.**
- **If you must work with the engine running, keep your hands, clothing, hair and tools away from moving fans, belts and any other moving parts.**
- **It is advisable to secure or remove any loose clothing and remove any jewelry, such as rings, watches, etc. before working on your vehicle.**
- **Always wear eye protection whenever you work on your vehicle.**
- **If you must run the engine in an enclosed space such as a garage, be sure there is proper ventilation for exhaust gases to escape.**
- **Never get under the vehicle while it is supported only by a jack. If it is necessary to work under the vehicle, support it with safety stands.**
- **Keep smoking materials, flame and sparks away from the fuel tank and battery.**
- **On gasoline engine models, the fuel filter or fuel lines should be serviced because the fuel lines are under high pressure even when the engine is off. It is recommended that you visit a NISSAN dealer for this service.**

⚠ CAUTION

- **Do not work under the hood while the engine is hot. Turn the engine off and wait until it cools down.**
- **Avoid contact with used engine oil and coolant. Improperly disposed engine oil, engine coolant and/or other vehicle fluids can damage the environment. Always conform to local regulations for disposal of vehicle fluid.**
- **Never leave the engine or the transmission related component harness connector disconnected while the ignition switch is in the ON position.**
- **Never connect or disconnect the battery or any transistorized component while the ignition switch is in the ON position.**

NOTE:

If the battery is completely drained the transmission will not manually shift to other positions.

This "Do-it-yourself" section gives instructions regarding only those items which are relatively easy for an owner to perform.

A Genuine NISSAN service manual is also available. For additional information, see "Owner's Manual/Service Manual order information" (P. 545).

NISSAN recommends the use of Genuine NISSAN parts or equivalent. The use of parts that do not meet or exceed NISSAN specifications, can cause damage to your vehicle, and have an effect on your warranty coverage. It is recommended that you visit a NISSAN dealer parts department who can provide information on the proper parts for your vehicle.

ENGINE COMPARTMENT CHECK LOCATIONS

You should be aware that incomplete or improper servicing may result in operating difficulties or excessive emissions, and could affect warranty coverage. **If in doubt about any servicing, it is recommended that you have it done by a NISSAN dealer.**

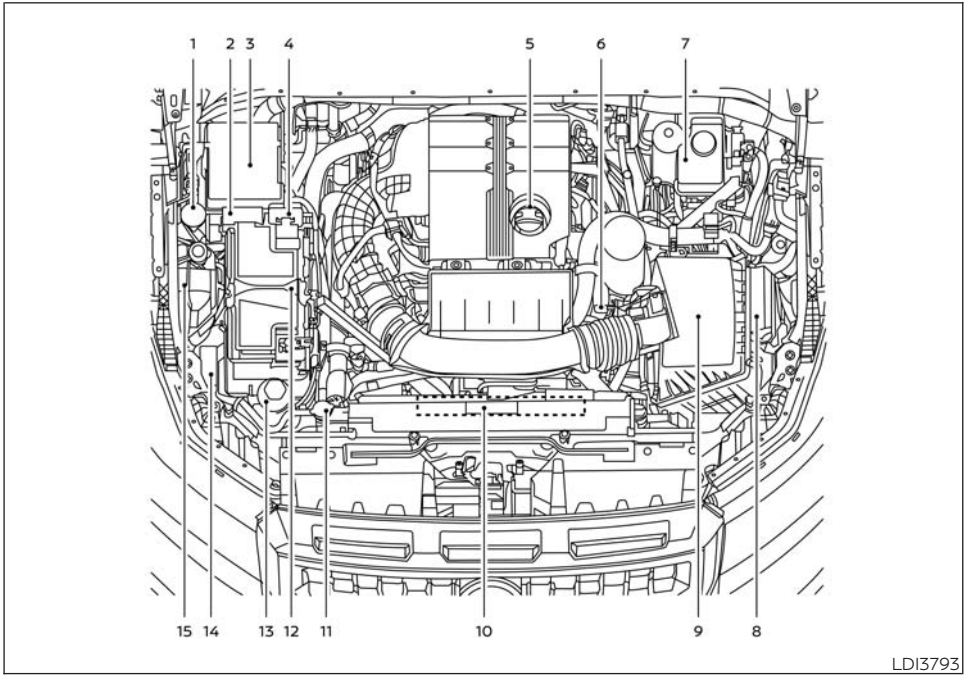

3.8L 6 cylinder (VQ38DD engine model)

1. Windshield-washer fluid reservoir
2. Fusible link and relay box
3. Fuse/Fusible link box
4. Fusible link
5. Engine oil filler cap
6. Engine oil dipstick

7. Brake fluid reservoir
8. Relay box
9. Air cleaner
10. Drive belt location
11. Radiator cap
12. Battery and battery cover
13. Power steering fluid reservoir
14. Relay box
15. Engine coolant reservoir

NOTE:

Your vehicle may not be equipped with an engine cover.

BASIC INFORMATION

The engine cooling system is filled at the factory with a pre-diluted mixture of 50% Genuine NISSAN Long Life Antifreeze/Coolant (blue) and 50% water to provide year-round antifreeze and coolant protection. The antifreeze solution contains rust and corrosion inhibitors. Additional engine cooling system additives are not necessary.

⚠ WARNING

- **Never remove the radiator or coolant reservoir cap when the engine is hot. Wait until the engine and radiator cool down. Serious burns could be caused by high pressure fluid escaping from the radiator. For additional information on precautions, see "If your vehicle overheats" (P. 417).**
- **The radiator and coolant reservoir are equipped with a pressure type radiator cap. To prevent engine damage, use only a Genuine NISSAN radiator cap.**

⚠ CAUTION

- **Never use any cooling system additives such as radiator sealer. Additives may clog the cooling system and cause damage to the engine, transmission and/or cooling system.**
- **When adding or replacing coolant, be sure to use only Genuine NISSAN Long Life Antifreeze/Coolant (blue) or equivalent. Genuine NISSAN Long Life Antifreeze/Coolant (blue) is pre-diluted to provide antifreeze protection to -34° F (-37° C). If additional freeze protection is needed due to weather where you operate your vehicle, add Genuine NISSAN Long Life Antifreeze/Coolant (blue) concentrate following the directions on the container. If an equivalent coolant other than Genuine NISSAN Long Life Antifreeze/Coolant (blue) is used, follow the coolant manufacturer's instructions to maintain minimum antifreeze protection to -34° F (-37° C). The use of other types of coolant solutions other than Genuine NISSAN Long Life Antifreeze/Coolant (blue) or equivalent may damage the engine cooling system.**

- **The life expectancy of the factory-fill coolant is 105,000 miles (168,000 km) or 7 years. Mixing any other type of coolant other than Genuine NISSAN Long Life Antifreeze/Coolant (blue) (or equivalent coolant), including Genuine NISSAN Long Life Antifreeze/Coolant (green), or the use of non-distilled water may reduce the life expectancy of the factory-fill coolant. For additional information, see the "Maintenance and schedules" section of this manual.**

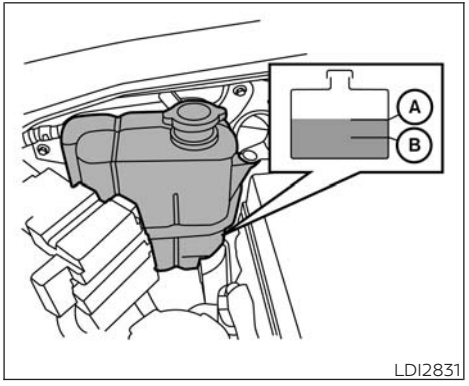

LDI2831

CHECKING ENGINE COOLANT LEVEL

Check the coolant level **in the reservoir when the engine is cold.** If the coolant level is below the MIN level Ⓑ, add coolant to the MAX level Ⓐ. If the reservoir is empty, check the coolant level in the radiator **when the engine is cold.** If there is insufficient coolant in the radiator, fill the radiator with coolant up to the filler opening and also add it to the reservoir up to the MAX level Ⓐ.

This vehicle contains Genuine NISSAN Long Life Antifreeze/Coolant (blue). The life expectancy of the factory-fill coolant is 105,000 miles (168,000 km) or 7 years. Mixing any other type of coolant or the use of non-distilled water will reduce the life expectancy of the factory-fill coolant. For additional information, see the "Maintenance and schedules" section of this manual.

If the cooling system frequently requires coolant, it is recommended that you visit a NISSAN dealer for this service.

For additional information on the location of the engine coolant reservoir, see "Engine compartment check locations" (P. 433).

CHANGING ENGINE COOLANT

A NISSAN dealer can change the engine coolant. The service procedure can be found in the NISSAN Service Manual.

Improper servicing can result in reduced heater performance and engine overheating.

⚠ WARNING

- **To avoid the danger of being scalded, never change the coolant when the engine is hot.**

- **Never remove the radiator or engine coolant reservoir cap when the engine is hot. Serious burns could be caused by high pressure fluid escaping from the radiator.**
- **Avoid direct skin contact with used coolant. If skin contact is made, wash thoroughly with soap or hand cleaner as soon as possible.**
- **Keep coolant out of the reach of children and pets.**

Engine coolant must be disposed of properly. Check your local regulations.

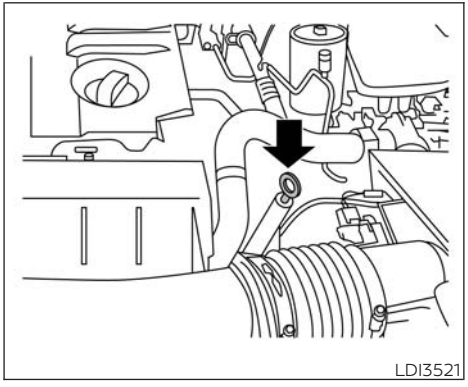

LDI3521

CHECKING ENGINE OIL LEVEL

1. Park the vehicle on a level surface and apply the parking brake.
2. Start the engine and let it idle until it reaches operating temperature.
3. Turn off the engine. **Wait more than 10 minutes for the oil to drain back into the oil pan.**
4. Remove the dipstick and wipe it clean. Reinsert it all the way.

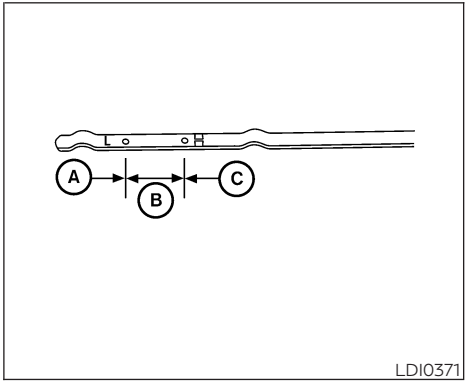

LDI0371

5. Remove the dipstick again and check the oil level. It should be between the H (High) and L (Low) marks Ⓑ. This is the normal operating oil level range. If the oil level is below the L (Low) mark Ⓐ, remove the oil filler cap and pour recommended oil through the opening. **Do not overfill Ⓒ.**
6. Recheck oil level with the dipstick.

It is normal to add some oil between oil maintenance intervals or during the break-in period, depending on the severity of operating conditions.

⚠ CAUTION

Oil level should be checked regularly. Operating the engine with an insufficient amount of oil can damage the engine, and such damage is not covered by warranty.

CHANGING ENGINE OIL AND OIL FILTER

Basic information

For additional information on engine oil and oil filter change, refer to the instructions outlined in this section.

Vehicle set-up

1. Park the vehicle on a level surface and apply the parking brake.
2. Run the engine until it reaches operating temperature.
3. Turn the engine off and wait for 15 minutes.
4. Raise and support the vehicle using a suitable floor jack and safety jack stands.
   - Place the safety jack stands under the vehicle jack-up points.
   - A suitable adapter should be attached to the jack stand saddle.

⚠ CAUTION

Make sure the correct lifting and support points are used to avoid vehicle damage.

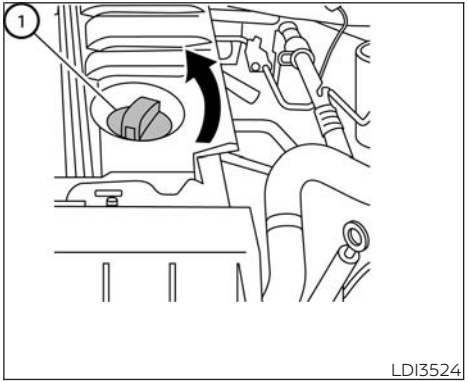

① **Oil filler cap**

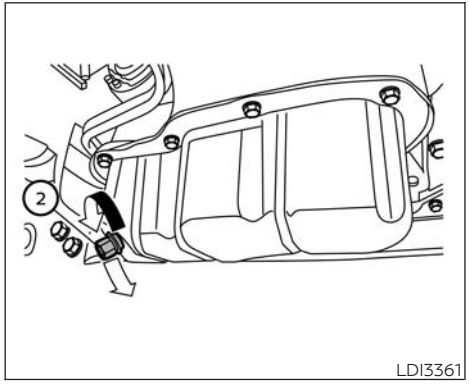

② **Oil drain plug**

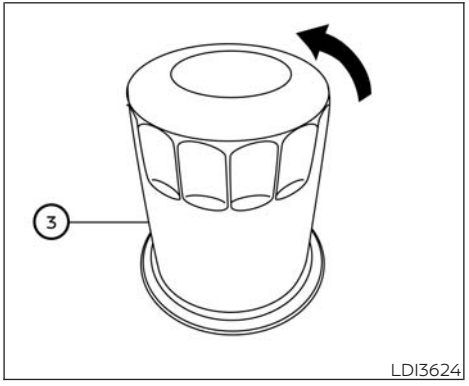

③ **Oil filter**

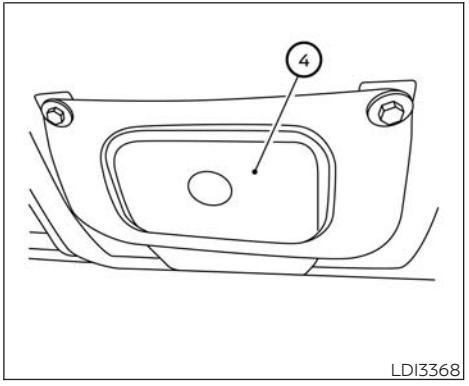

④ **Oil filter access cover (Type A) (if so equipped)**

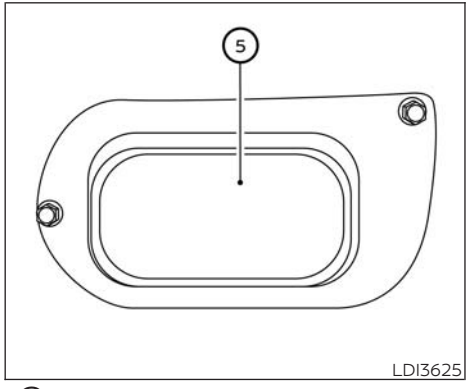

⑤ **Oil filter access cover (Type B) (if so equipped)**

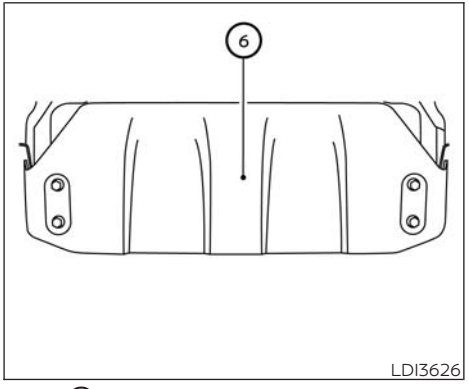

⑥ **Skid plate (if so equipped)**

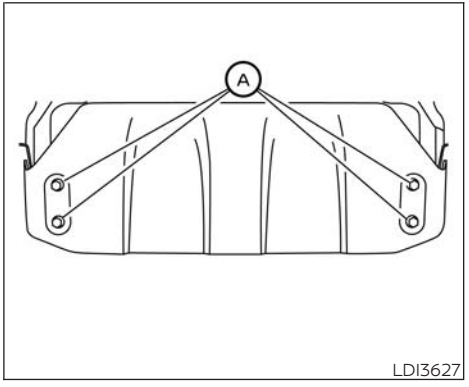

Skid plate (if so equipped)

Removal of under-engine protectors

1. Remove bolts Ⓐ and skid plate (if so equipped).

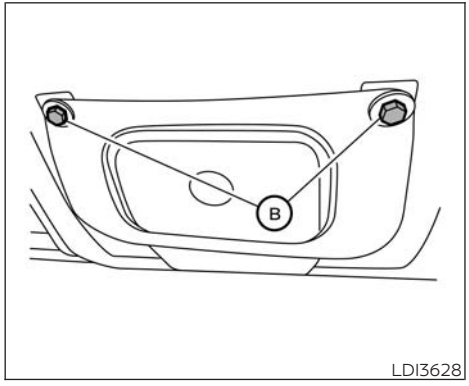

Oil filter access cover (Type A) (if so equipped)

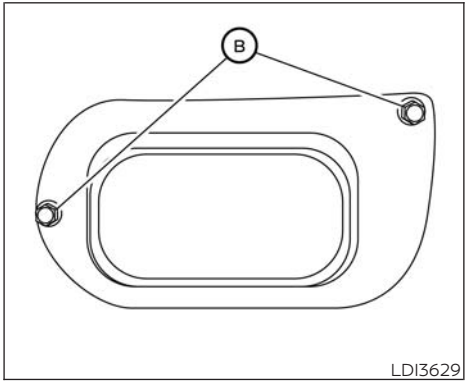

Oil filter access cover (Type B) (if so equipped)

2. Remove bolts Ⓑ and oil filter access cover.

Engine oil and filter

1. Place a large drain pan under the drain plug and oil filter.
2. Remove the oil filler cap.
3. Remove the drain plug with a wrench by turning it counterclockwise and completely drain the oil.

⚠ CAUTION

Be careful not to burn yourself, as the engine oil is hot.

⚠ WARNING

- **Prolonged and repeated contact with used engine oil may cause skin cancer.**
- **Try to avoid direct skin contact with used oil. If skin contact is made, wash thoroughly with soap or hand cleaner as soon as possible.**
- **Keep used engine oil out of reach of children.**

4. Loosen the oil filter with an oil filter wrench by turning it counterclockwise. Remove the oil filter by turning it by hand.
5. Wipe the engine oil filter mounting surface with a clean rag.

⚠ CAUTION

Be sure to remove any old gasket material remaining on the sealing surface of the engine. Failure to do so could lead to an oil leak and engine damage.

- **The dipstick must be inserted in place to prevent oil spillage from the dipstick hole when filling the engine with oil.**

6. Coat the gasket on the new filter with clean engine oil.

   It is recommended that you use a Genuine NISSAN oil filter or equivalent, visit your NISSAN dealer parts department for proper part.

7. Screw in the oil filter clockwise until a slight resistance is felt, then tighten additionally more than 2/3 turn.

   Oil filter tightening torque:
   11 to 15 ft-lb (15 to 21 N·m)

8. Clean and re-install the drain plug with a new washer. Securely tighten the drain plug with a wrench. Do not use excessive force.

   Drain plug tightening torque:
   22 to 29 ft-lb (29.4 to 39.2 N·m)

9. Refill the engine with the recommended oil through the oil filler opening, and install the oil filler cap securely.

⚠ CAUTION

Do not spill fluids on engine cover. This could damage the engine cover. If fluids are spilled, immediately clean surface with a neutral detergent. Do not use an organic solvent such as brake cleaner.

For additional information about drain and refill capacity, see "Recommended fluids/lubricants and capacities" (P. 501). The drain and refill capacity depends on the oil temperature and drain time. Use these specifications for reference only. Always use the dipstick to determine the proper amount of oil in the engine.

10. Start the engine and check for leakage around the drain plug and the oil filter. Correct as required. Turn the engine off and wait more than 15 minutes. Check the oil level with the dipstick. Add engine oil if necessary.

After the operation

1. Reinstall engine protectors in reverse order of removal.
2. Lower the vehicle carefully to the ground.
3. Reset the oil and oil filter maintenance reminder. For additional information, see "Vehicle information display" (P. 124).
   - Dispose of waste oil and filter properly.
   - Check your local regulations.

AUTOMATIC TRANSMISSION FLUID (ATF)

When checking or replacement is required, it is recommended that you visit a NISSAN dealer for this service.

⚠ CAUTION

- **NISSAN recommends using Genuine NISSAN Matic P ATF. Do not mix with other fluids.**
- **Do not use CVT fluid or manual transmission fluid in this transmission. Damage caused by the use of fluids other than as recommended is not covered under NISSAN's New Vehicle Limited Warranty.**
- **Using fluids that are not equivalent to Genuine NISSAN Matic P ATF may also damage the transmission. Damage caused by the use of fluids other than as recommended is not covered under NISSAN's New Vehicle Limited Warranty.**

POWER STEERING FLUID (PSF)

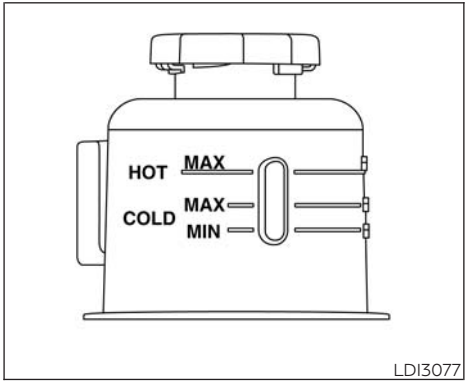

Check the power steering fluid level when the engine is stopped.

The fluid level should be between the COLD MAX line and the COLD MIN line on the power steering fluid reservoir at cold fluid temperatures of 32° - 86°F (0° - 30°C) or at the HOT MAX line on the power steering fluid reservoir at hot fluid temperatures of 122° - 176°F (50° - 80°C).

If the fluid is cold and is at or below the COLD MIN line, add Genuine NISSAN PSF-II or equivalent to the COLD MAX line. If the fluid is hot and below the HOT MAX line, add Genuine NISSAN PSF-II or equivalent to the HOT MAX line. Remove the cap and fill through the opening.

⚠ CAUTION

- **DO NOT OVERFILL.**
- **Do not reuse power steering fluid.**
- **Recommended fluid is Genuine NISSAN PSF-II or equivalent**

BASIC INFORMATION

For additional brake fluid specification information, see "Recommended fluids/lubricants and capacities" (P. 501).

⚠ WARNING

- **Use only new fluid from a sealed container. Old, inferior or contaminated fluid may damage the brake system. The use of improper fluids can damage the brake system and affect the vehicle's stopping ability.**
- **Clean the filler cap before removing.**
- **Brake fluid is poisonous and should be stored carefully in marked containers out of reach of children.**

⚠ CAUTION

Do not spill the fluid on any painted surfaces. This will damage the paint. If fluid is spilled, immediately wash the surface with water.

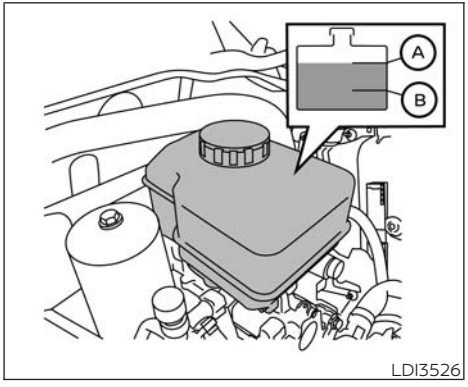

LDI3526

BRAKE FLUID

Check the brake fluid level in the reservoir. If the fluid level is below the MIN line Ⓑ or the brake warning light comes on, add Genuine NISSAN Super Heavy Duty Brake Fluid or equivalent **DOT 3** fluid up to the MAX line Ⓐ. If fluid must be added frequently, the system should be checked. It is recommended that you visit a NISSAN dealer for this service.

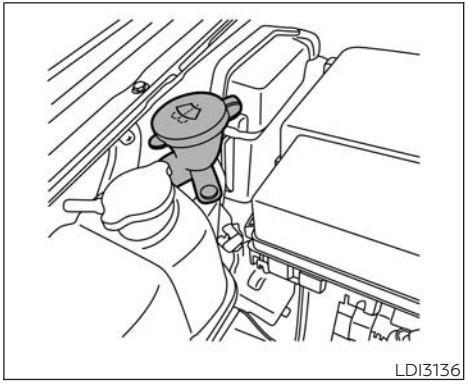
LDI3136

WINDSHIELD-WASHER FLUID RESERVOIR

Fill the windshield-washer fluid reservoir periodically. Add windshield-washer fluid when the "Low Washer Fluid" warning message is displayed on the vehicle information display.

To fill the windshield-washer fluid reservoir, lift the cap off the reservoir and pour the windshield-washer fluid into the reservoir opening.

Add a washer solvent to the washer for better cleaning. In the winter season, add a windshield-washer antifreeze. Follow the manufacturer's instructions for the mixture ratio.

Refill the reservoir more frequently when driving conditions require an increased amount of windshield-washer fluid.

Recommended fluid is Genuine NISSAN Windshield-Washer Concentrate Cleaner & Antifreeze or equivalent.

⚠ CAUTION

- **Do not substitute engine antifreeze coolant for windshield-washer solution. This may result in damage to the paint.**
- **Do not fill the windshield-washer reservoir with washer fluid concentrates at full strength. Some methyl alcohol based washer fluid concentrates may permanently stain the grille if spilled while filling the windshield-washer reservoir.**
- **Pre-mix washer fluid concentrates with water to the manufacturer's recommended levels before pouring the fluid into the windshield-washer reservoir. Do not use the windshield-washer reservoir to mix the washer fluid concentrate and water.**

BASIC INFORMATION

Caution symbols for battery			⚠ WARNING
①		No smoking, No exposed flames, No Sparks	Do not expose the battery to electrical sparks, flames or smoking. Hydrogen gas generated by the battery is explosive. Explosive gases can cause blindness or injury.
②		Shield eyes	Handle the battery cautiously. Always wear eye protection glasses to protect against explosion or battery acid.
③		Keep away from children	Never allow children to handle the battery. Keep the battery out of the reach of children.
④		Battery acid	Do not allow battery fluid to contact your skin, eyes, fabrics, or painted surfaces. Sulfuric acid can cause blindness or severe burns. After handling the battery or battery cap, do not touch or rub your eyes. Thoroughly wash your hands. If the acid contacts your eyes, skin or clothing, immediately flush with water for at least 15 minutes and seek medical attention. Battery fluid is acid. If the battery fluid gets into your eyes or onto your skin, it could cause loss of your eyesight or burns.
⑤		Note operating instructions	Before handling the battery, read this instruction carefully to ensure correct and safe handling.
⑥		Explosive gas	Hydrogen gas generated by battery fluid is explosive. Explosive gases can cause blindness or injury.

- If the battery is labeled “do not open” it is maintenance free and battery fluid should not be checked. It is recommended that you visit a NISSAN dealer or a qualified specialist workshop to confirm the battery’s performance.
- Keep the battery surface clean and dry. Clean the battery with a solution of baking soda and water.
- Make certain the terminal connections are clean and securely tightened.
- If the vehicle is not to be used for 30 days or longer, disconnect the negative (-) battery terminal cable to prevent discharge.

NOTE:

Care should be taken to avoid situations that can lead to potential battery discharge and potential no-start conditions such as:

1. **Installation or extended use of electronic accessories that consume battery power when the engine is not running (Phone chargers, GPS, DVD players, etc.)**
2. **Vehicle is not driven regularly and/or only driven short distances.**

In these cases, the battery may need to be charged to maintain battery health.

The vehicle is equipped with a battery cover which protects the battery from engine heat and from damage during a collision. When replacing the battery, the cover must be reinstalled. For additional information, see "Engine compartment check locations" (P. 433).

⚠WARNING

- **Do not expose the battery to flames, an electrical spark or a cigarette. Hydrogen gas generated by the battery is explosive. Explosive gases can cause blindness or injury. Do not allow battery fluid to contact your skin, eyes, fabrics or painted surfaces. Sulfuric acid can cause blindness or injury. After touching a battery or battery cap, do not touch or rub your eyes. Thoroughly wash your hands. If the acid contacts your eyes, skin or clothing, immediately flush with water for at least 15 minutes and seek medical attention.**
- **When working on or near a battery, always wear suitable eye protection and remove all jewelry.**
- **Battery posts, terminals and related accessories contain lead and lead compounds. Wash hands after handling.**
- **Keep battery out of the reach of children.**
- **Do not tip the battery.**

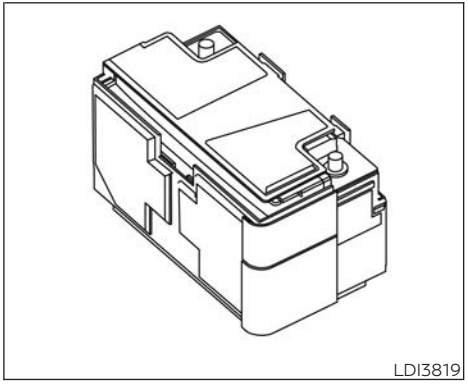

NOTE:

Do not try to open the top of the battery.

This battery is not equipped with removable vent caps.

JUMP STARTING

If jump starting is necessary, see "Jump starting" (P. 415). If the engine does not start by jump starting, the battery may have to be replaced. It is recommended that you visit a NISSAN dealer for this service.

VARIABLE VOLTAGE CONTROL SYSTEM

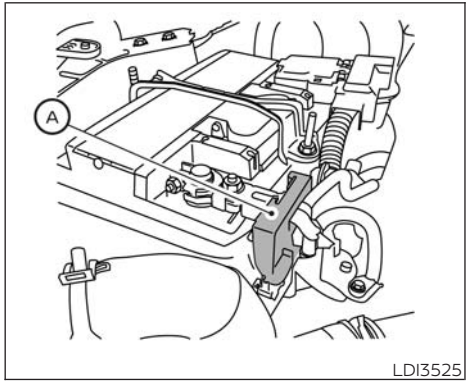

LDI3525

⚠CAUTION

- **Do not ground accessories directly to the battery terminal. Doing so will bypass the variable voltage control system and the vehicle battery may not charge completely.**
- **Use electrical accessories with the engine running to avoid discharging the vehicle battery.**

NOTE:

If the battery is completely drained the transmission will not manually shift to other positions.

Your vehicle is equipped with a variable voltage control system. This system measures the amount of electrical discharge from the battery and controls voltage generated by the generator.

The current sensor Ⓐ is located near the battery along the negative battery cable. If you add electrical accessories to your vehicle, be sure to ground them to a suitable body ground such as the frame or engine block area.

DRIVE BELT

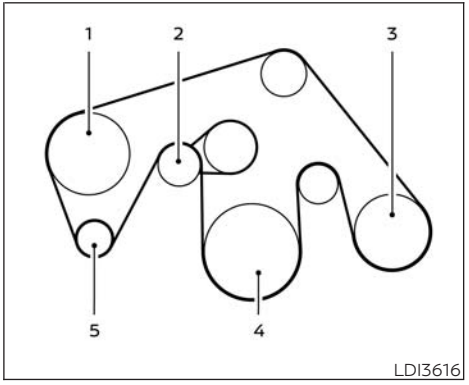

LDI3616

1. Power steering fluid pump pulley
2. Automatic belt tensioner pulley
3. Air conditioner compressor pulley
4. Crankshaft pulley
5. Generator pulley

⚠WARNING

Be sure the ignition switch is in the OFF or LOCK position before servicing drive belt. The engine could rotate unexpectedly.

1. Visually inspect the belt for signs of unusual wear, cuts, fraying or looseness. If the belt is in poor condition or is loose, have it replaced or adjusted. It is recommended that you visit a NISSAN dealer for this service.
2. Have the belt checked regularly for condition and tension in accordance with the maintenance schedule found in the "Maintenance and schedules" section of this manual.

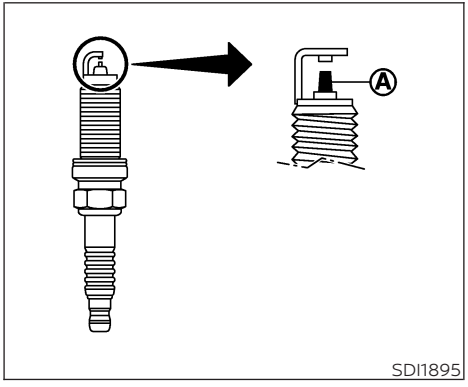

REPLACING SPARK PLUGS

Iridium-tipped spark plugs

It is not necessary to replace iridium-tipped Ⓐ spark plugs as frequently as conventional type spark plugs because they last much longer. Follow the maintenance log shown in the "Maintenance and schedules" section of this manual. Do not service iridium-tipped spark plugs by cleaning or regapping.

- **Always replace spark plugs with recommended or equivalent ones.**

If replacement is required, it is recommended that you visit a NISSAN dealer for this service.

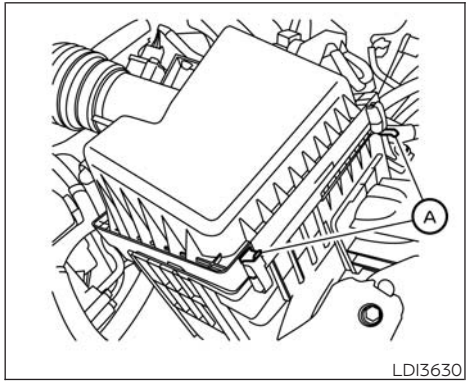

LDI3630

BASIC INFORMATION

The dry paper type filter element may be cleaned and reused. Replace it according to the maintenance log shown in the "Maintenance and schedules" section of this manual.

To remove the air cleaner filter:

1. Unlatch the clips Ⓐ and move the air cleaner cover upward.
2. Remove the air cleaner filter.
3. Wipe the inside of the air cleaner filter housing and the cover with a damp cloth.

NOTE:

After installing a new air cleaner filter, make sure the air cleaner cover is seated in the housing and latch the clips Ⓐ.

⚠WARNING

- **Operating the engine with the air cleaner removed can cause you or others to be burned. The air cleaner not only cleans the air, it stops the flame if the engine backfires. If it isn't there, and the engine backfires, you could be burned. Do not drive with the air cleaner removed, and be careful when working on the engine with the air cleaner removed.**
- **Never pour fuel into the throttle body or attempt to start the engine with the air cleaner removed. Doing so could result in serious injury.**

IN-CABIN MICROFILTER (if so equipped)

Your vehicle may be equipped with an in-cabin microfilter which collects dirt, pollen, dust, etc. and reduces some objectionable outside odors.

The in-cabin microfilter is located within the instrument panel. Replace the filter in accordance with the specified maintenance intervals listed in the "Maintenance and schedules" section of this manual.

If replacement is required, it is recommended that you visit a NISSAN dealer for this service.

The filter should be replaced if the air flow decreases significantly or if windows fog up easily when operating the heater or air conditioner.

CLEANING

If your windshield is not clear after using the windshield-washer or if a wiper blade chatters when running, wax or other material may be on the blade or windshield.

Clean the outside of the windshield with a washer solution or a mild detergent. Your windshield is clean if beads do not form when rinsing with clear water.

Clean each blade by wiping it with a cloth soaked in a washer solution or a mild detergent. Then rinse the blades with clear water. If your windshield is still not clear after cleaning the blades and using the wiper, replace the blades.

⚠ CAUTION

Worn windshield wiper blades can damage the windshield and impair driver vision.

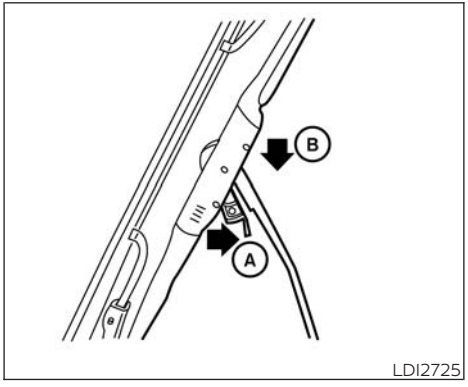

LDI2725

REPLACING

Replace the wiper blades if they are worn.

1. Lift the wiper arm away from the windshield.
2. Push and hold the release tab Ⓐ, and then move the wiper blade down Ⓑ the wiper arm to remove.
3. Remove the wiper blade.
4. Insert the new wiper blade onto the wiper arm until it clicks into place.

⚠ CAUTION

- **After wiper blade replacement, return the wiper arm to its original position; otherwise it may be damaged when the hood is opened.**
- **Make sure the wiper blades contact the glass; otherwise the arms may be damaged from wind pressure.**

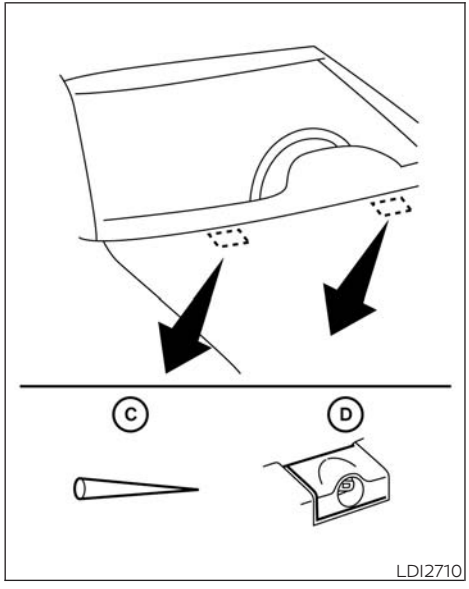

Be careful not to let anything get into the washer nozzle Ⓓ. This may cause clogging or improper windshield-washer operation. If something gets into the nozzle, remove it with a needle or small pin Ⓒ.

BASIC INFORMATION

If the brakes do not operate properly, have the brakes checked. It is recommended that you visit a NISSAN dealer for this service.

SELF-ADJUSTING BRAKES

Your vehicle is equipped with self-adjusting brakes.

The front and rear disc-type brakes self-adjust every time the brake pedal is applied.

⚠WARNING

Have your brake system checked if the brake pedal height does not return to normal. It is recommended that you visit a NISSAN dealer for this service.

BRAKE PAD WEAR INDICATORS

The disc brake pads on your vehicle have audible wear indicators. When a brake pad requires replacement, a high pitched scraping or screeching sound will be heard when the vehicle is in motion. The noise will be heard whether or not the brake pedal is depressed. Have the brakes checked as soon as possible if the wear indicator sound is heard.

Under some driving or climate conditions, occasional brake squeak, squeal or other noise may be heard. Occasional brake noise during light to moderate stops is normal and does not affect the function or performance of the brake system.

Proper brake inspection intervals should be followed. For additional information regarding brake inspections, see the appropriate maintenance schedule information in the "Maintenance and schedules" section of this manual.

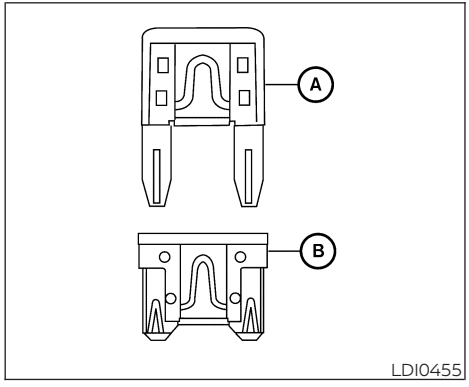

LDI0455

BASIC INFORMATION

Two types of fuses are used. Type Ⓐ is used in the fuse boxes in the engine compartment. Type Ⓑ is used in the passenger compartment and engine compartment fuse boxes. Type Ⓐ fuses are provided as spare fuses. There are no spare fuses in the engine compartment.

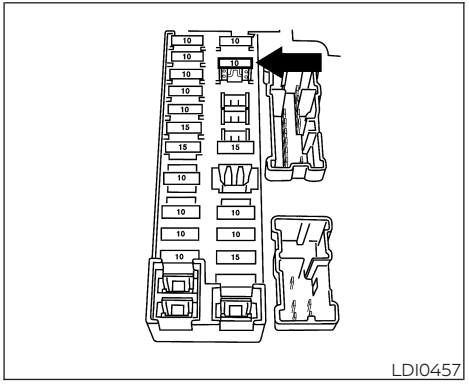
LDI0457

If a type Ⓐ fuse is used to replace a type Ⓑ fuse, the type Ⓐ fuse will not be level with the fuse pocket as shown in the illustration. This will not affect the performance of the fuse. Make sure the fuse is installed in the fuse box securely.

Type Ⓑ fuses cannot be installed in the underhood fuse boxes. Only use type Ⓐ fuses in the underhood fuse boxes.

NOTE:

Your vehicle may not be equipped with all fuses listed on the fuse label.

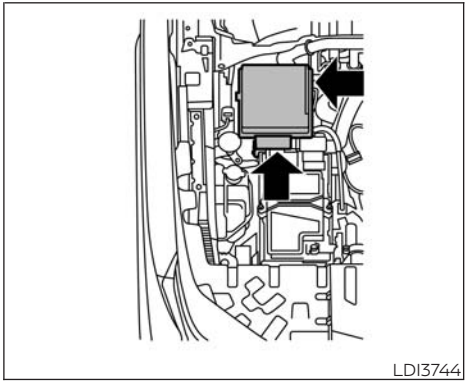
LDI3744

ENGINE COMPARTMENT

Basic information

⚠ WARNING

Never use a fuse of a higher or lower amperage rating than that specified on the fuse box cover. This could damage the electrical system or electronic control units or cause a fire.

If any electrical equipment does not come on, check for an open fuse.

1. Be sure the ignition switch and the headlight switch are OFF.
2. Open the engine hood.
3. Remove the fuse box cover by pushing the tab and lifting the cover up.
4. Remove the fuse with the fuse puller. The fuse puller is located in the center of the fuse block in the passenger compartment.

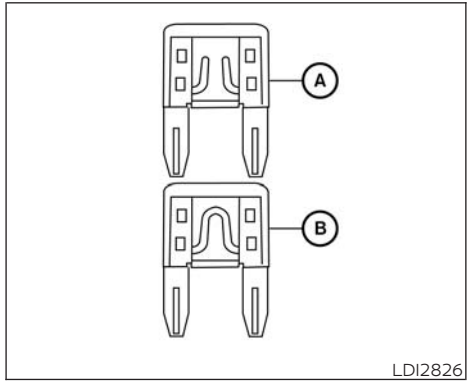

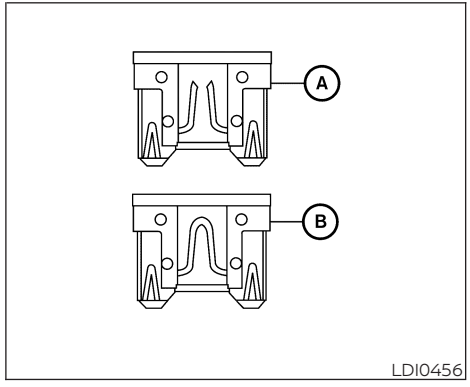

5. If the fuse is open Ⓐ, replace it with a new fuse Ⓑ.
6. If a new fuse also opens, have the electrical system checked and repaired. It is recommended that you visit a NISSAN dealer for this service.

Fusible links

If the electrical equipment does not operate and fuses are in good condition, check the fusible links. If any of these fusible links are melted, replace with only Genuine NISSAN parts.

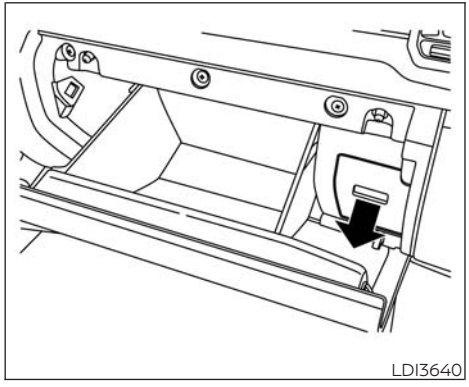

PASSENGER COMPARTMENT

⚠WARNING

Never use a fuse of a higher or lower amperage rating than that specified on the fuse box cover. This could damage the electrical system or electronic control units or cause a fire.

If any electrical equipment does not operate, check for an open fuse.

1. Be sure the ignition switch and the headlight switch are OFF.
2. Open glove box and pull the fuse box cover to remove.
3. Remove the fuse with the fuse puller.

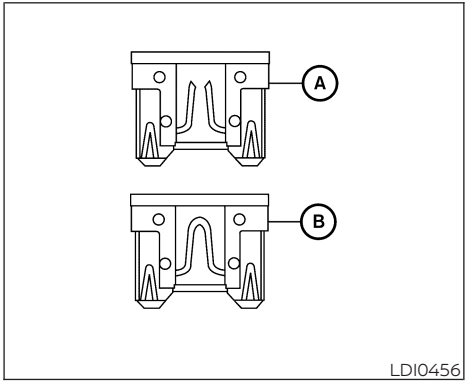

4. If the fuse is open Ⓐ, replace it with an equivalent good fuse Ⓑ.
5. Reverse step 2 to reinstall fuse box cover.
6. If a new fuse also opens, have the electrical system checked and repaired. It is recommended that you visit a NISSAN dealer for this service.

NOTE:

Your vehicle may not be equipped with all fuses listed on the fuse label.

INTELLIGENT KEY BATTERY REPLACEMENT

BASIC INFORMATION

⚠WARNING

- **Ingestion hazard: Death or serious injury can occur if ingested.**
- **A swallowed button cell or coin battery can cause internal chemical burns in as little as 2 hours.**
- **Keep new and used batteries out of reach of children.**
- **Be careful not to allow children or pets to swallow removed parts.**
- **Seek immediate medical attention if a battery is suspected to be swallowed or inserted inside any part of the body.**
- **For treatment information call the National battery ingestion hotline @ 1-800-498-8666.**
- **There is a danger of explosion if the battery is incorrectly replaced. Replace only with the same or equivalent type of battery. Incorrectly replacing the battery can lead to injury or death.**
- **Do not crush or cut the battery.**
- **Do not subject the battery to extremely low air pressure at high altitude.**

- **Do not expose the battery to excessive heat such as sunshine, fire or similar heat sources.**

⚠ CAUTION

- **An improperly disposed battery can harm the environment. Always confirm local regulations for battery disposal.**
- **When changing batteries, do not let dust or oil get on the components.**

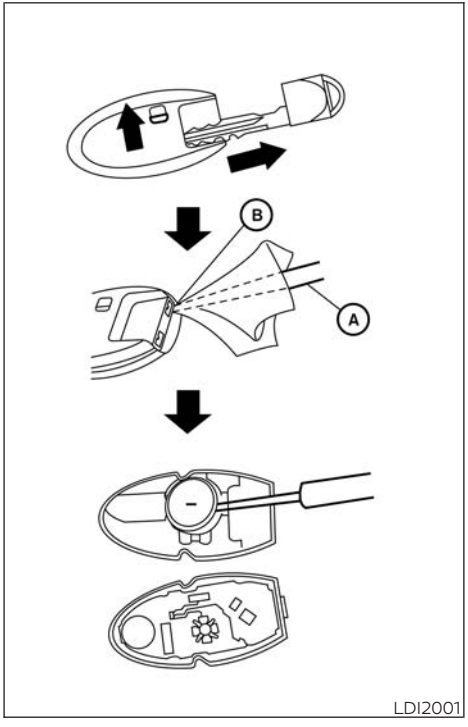

NISSAN INTELLIGENT KEY®

Replace the battery in the Intelligent Key as follows:

1. Remove the mechanical key from the Intelligent Key.
2. Insert a small flathead screwdriver Ⓐ into the slit Ⓑ of the corner and twist it to separate the upper part from the lower part. Place a cloth over the screwdriver to protect the casing.

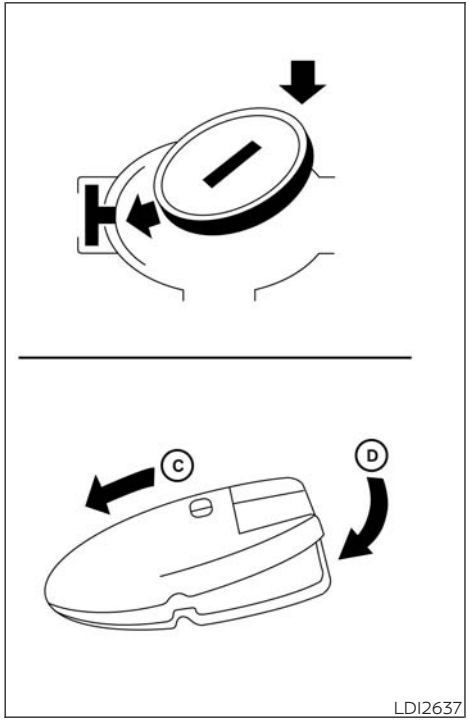

3. Replace the battery with a new one.

Recommended battery: CR2032 or equivalent.

- Do not touch the internal circuit and electric terminals as doing so could cause a malfunction.
- Hold the battery by the edges. Holding the battery across the contact points will seriously deplete the storage capacity.
- Make sure that the + side faces the bottom of the lower part.

4. Close the lid securely as illustrated with Ⓒ and Ⓓ.
5. Operate the buttons to check the operation.

If you need assistance with replacement, it is recommended that you visit a NISSAN dealer for this service.

FCC Notice:

For USA:
This device complies with Part 15 of the FCC Rules. Operation is subject to the following two conditions: (1) This device may not cause harmful interference, and (2) this device must accept any interference received, including interference that may cause undesired operation.

Note:

Changes or modifications not expressly approved by the party responsible for compliance could void the user's authority to operate the equipment.

For Canada:
This device contains licence-exempt transmitter(s)/receiver(s) that comply with Innovation, Science and Economic Development Canada's licence-exempt RSS(s). Operation is subject to the following two conditions: (1) This device may not cause interference. (2) This device must accept any interference, including interference that may cause undesired operation of the device.

HEADLIGHTS

Basic information

For additional information on headlight bulb replacement, refer to the instructions outlined in this section.

Replacing the halogen headlight bulb (if so equipped)

The headlight is a semi-sealed beam type which uses a replaceable headlight (halogen) bulb. Because the headlight assembly must be removed from the vehicle for bulb replacement, it is recommended that you visit a NISSAN dealer for this service.

⚠ CAUTION

- **High pressure halogen gas is sealed inside the halogen bulb. The bulb may break if the glass envelope is scratched or the bulb is dropped.**
- **When handling the bulb, do not touch the glass envelope.**
- **DO NOT TOUCH THE BULB WITH BARE HANDS.**
- **Use the same number and wattage as shown in the chart.**
- **Do not leave the bulb out of the headlight reflector for a long period of time as dust, moisture and smoke may enter the headlight body and affect the performance of the headlight.**
- **Aiming is not necessary after replacing the bulb. When aiming adjustment is necessary, it is recommended that you visit a NISSAN dealer for this service.**

Fog may temporarily form inside the lens of the exterior lights in the rain or in a car wash. A temperature difference between the inside and the outside of the lens causes the fog. This is not a malfunction. If large drops of water collect inside the lens, it is recommended that you visit a NISSAN dealer for servicing.

Replacing the LED headlight bulb (if so equipped)

If LED headlight bulb replacement is required, it is recommended that you visit a NISSAN dealer for this service.

FOG LIGHTS (if so equipped)

Basic information

For additional information on fog light bulb replacement, refer to the instructions outlined in this section.

Replacing the LED fog light bulb (if so equipped)

If LED fog light bulb replacement is required, it is recommended that you visit a NISSAN dealer for this service.

Replacing the fog light bulb (if so equipped)

If fog light bulb replacement is required, it is recommended that you visit a NISSAN dealer for this service.

⚠ CAUTION

- **High pressure halogen gas is sealed inside the halogen bulb. The bulb may break if the glass envelope is scratched or the bulb is dropped.**
- **When handling the bulb, do not touch the glass envelope.**

- **Use the same number and wattage as originally installed as shown in the chart.**
- **Do not leave the bulb out of the fog light for a long period of time as dust, moisture and smoke may enter the fog light body and affect the performance of the fog light.**

EXTERIOR AND INTERIOR LIGHTS
Basic information

Item	Wattage (W)	Bulb No.*
Headlight assembly (Type A) (if so equipped)*		
Low/High	55/65	HB5
Turn/Park	28/8	7444NA
Side marker	—	—
Headlight assembly (Type B) (if so equipped)*		
Low	—	—
High	—	—
Turn	—	—
Daytime Running Light (DRL)/Park	—	—
Side marker	—	—
Fog light (Type A) (if so equipped)*	—	—
Fog light (Type B) (if so equipped)*	35	H8
Fog light assembly (if so equipped)*		
Fog	35	H8
Daytime Running Light (DRL)	21	W21W
Map lights (Type A) (if so equipped)	8	—
Map lights (Type B) (if so equipped)*	—	—
Vanity mirror light (if so equipped)*	1.4	—
Room light (Type A) (if so equipped)	8	—
Room light (Type B) (if so equipped)*	—	—
Glove box light (if so equipped)*	1	—
High-mounted stop light/cargo light*	12.8	912
Bed lights (if so equipped)*	—	—
Rear combination light*		
Tail	—	—
Stop/turn	—	—
Backup	—	—
License plate lights	—	—

* It is recommended that you visit a NISSAN dealer for replacement.

Always check with the Parts Department at a NISSAN dealer for the latest parts information.

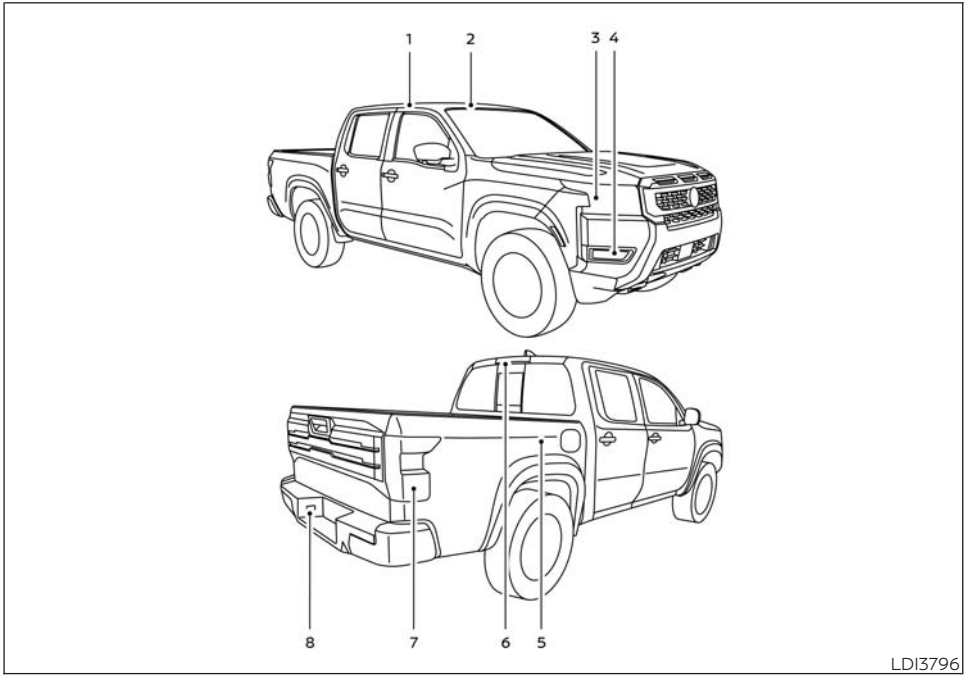

1. Room light
2. Map lights
3. Headlight assembly
4. Fog light/Fog light assembly (if so equipped)
5. Bed lights (if so equipped)

6. High-mount stop light/cargo light
7. Rear combination light
8. License plate lights

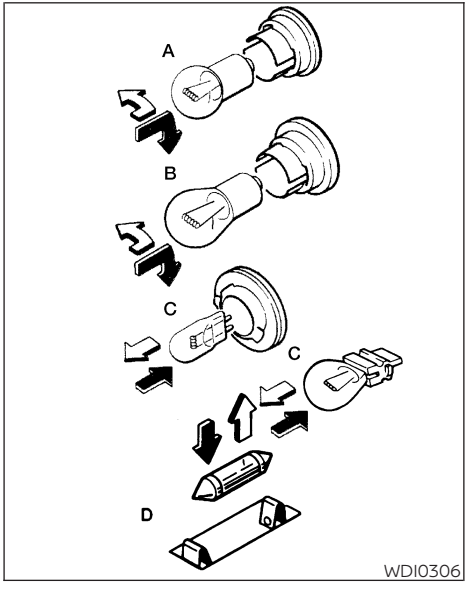

Replacement procedures

All other lights are either type A, B, C or D. When replacing a bulb, first remove the lens and/or cover using a cloth and suitable tool.

⇧ : Indicates bulb removal

⬆ : Indicates bulb installation

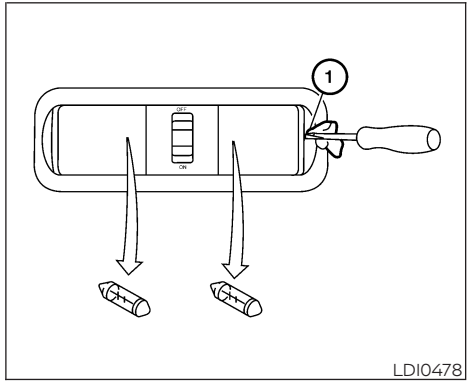

Map light (Type A) (if so equipped)

Use a cloth ① to protect the housing.

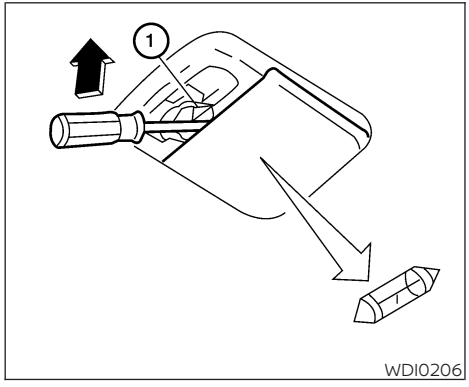

Room light (Type A) (if so equipped)
Use a cloth ① to protect the housing.

BASIC INFORMATION

If you have a flat tire, see "Flat tire" (P. 407).

TIRE PRESSURE

Tire Pressure Monitoring System (TPMS)

⚠WARNING

Radio waves could adversely affect electric medical equipment. Those who use a pacemaker should contact the electric medical equipment manufacturer for the possible influences before use.

This vehicle is equipped with TPMS. It monitors tire pressure of all tires except the spare. When the low tire pressure warning light is lit and the "Tire Pressure Low - Add Air" warning message is displayed in the vehicle information display, one or more of your tires is significantly under-inflated.

TPMS will activate only when the vehicle is driven at speeds above 16 mph (25 km/h). Also, this system may not detect a sudden drop in tire pressure (for example, a flat tire while driving).

For additional information, see "Low tire pressure warning light" (P. 119), "Tire Pressure Monitoring System (TPMS)" (P. 274) and "Flat tire" (P. 407).

Tire inflation pressure

Check the tire pressures (including the spare) often and always prior to long distance trips. The recommended tire pressure specifications are shown on the F.M.V.S.S./C.M.V.S.S. certification label or the Tire and Loading Information label under the "Cold Tire Pressure" heading. The Tire

and Loading Information label is affixed to the driver side center pillar. Tire pressures should be checked regularly because:

- Most tires naturally lose air over time.
- Tires can lose air suddenly when driven over potholes or other objects or if the vehicle strikes a curb while parking.

The tire pressures should be checked when the tires are cold. The tires are considered COLD after the vehicle has been parked for 3 or more hours, or driven less than 1 mile (1.6 km) at moderate speeds.

The TPMS with Easy-Fill Tire Alert provides visual and audible signals outside the vehicle for inflating tires to the recommended COLD tire pressure. For additional information, see "TPMS with Easy-Fill Tire Alert" (P. 277).

Incorrect tire pressure, including under inflation, may adversely affect tire life and vehicle handling.

⚠WARNING

- **Improperly inflated tires can fail suddenly and cause an accident.**
- **The Gross Vehicle Weight Rating (GVWR) is located on the F.M.V.S.S./C.M.V.S.S. certification label. The vehicle weight capacity is indicated on the Tire and Loading Information label. Do not load your vehicle beyond this capacity. Overloading your vehicle may result in reduced tire life, unsafe operating conditions due to premature tire failure, or unfavorable handling characteristics and could also lead to a serious accident. Loading beyond the specified capacity may also result in failure of other vehicle components.**
- **Before taking a long trip, or whenever you heavily load your vehicle, use a tire pressure gauge to ensure that the tire pressures are at the specified level.**
- **For additional information regarding tires, refer to "Important Tire Safety Information" (US) or "Tire Safety Information" (Canada) in the Warranty Information Booklet.**

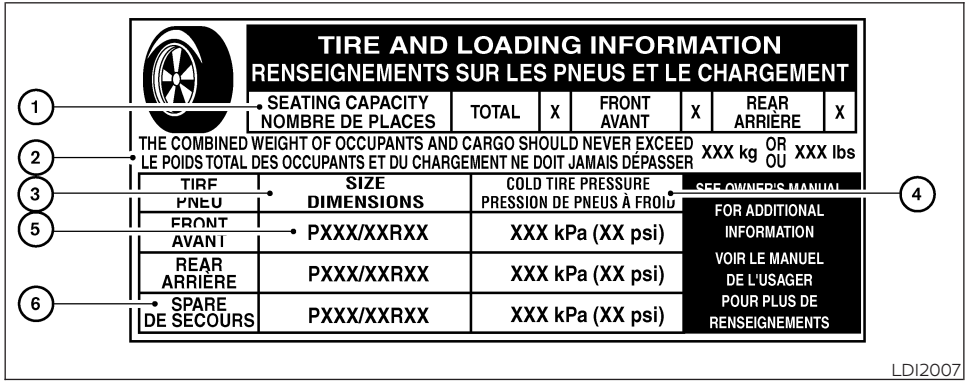

Tire and Loading Information label

① Seating capacity: The maximum number of occupants that can be seated in the vehicle.

② Vehicle load limit: See "Vehicle loading information" (P. 516).

③ Original tire size: The size of the tires originally installed on the vehicle at the factory.

④ Cold tire pressure: Inflate the tires to this pressure when the tires are cold. Tires are considered COLD after the vehicle has been parked for 3 or more hours, or driven less than 1 mile (1.6 km) at moderate speeds. The recommended cold tire inflation is set by the manufacturer to provide the best balance of tire wear, vehicle handling, driveability, tire noise, etc., up to the vehicle's GVWR.

⑤ Tire size: See "Tire labeling" (P. 465).

⑥ Spare tire size.

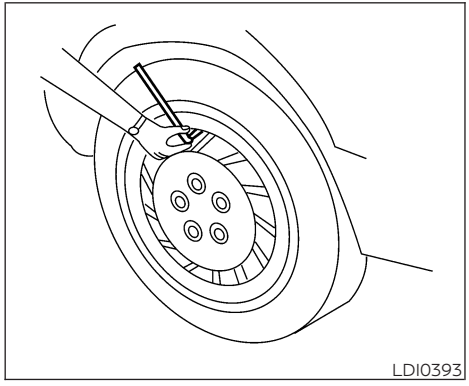

Checking tire pressure

1. Remove the valve stem cap from the tire.
2. Press the pressure gauge squarely onto the valve stem. Do not press too hard or force the valve stem sideways, or air will escape. If the hissing sound of air escaping from the tire is heard while checking the pressure, reposition the gauge to eliminate this leakage.
3. Remove the gauge.
4. Read the tire pressure on the gauge stem and compare to the specification shown on the F.M.V.S.S./C.M.V.S.S. label or the Tire and Loading Information label.
5. Add air to the tire as needed. If too much air is added, press the core of the valve stem briefly with the tip of the gauge stem to release pressure. Recheck the pressure and add or release air as needed.
6. Install the valve stem cap.
7. Check the pressure of all other tires, including the spare.

Size	**Cold Tire Inflation Pressure**	
	kPa	psi
Front and Rear Original Tire: P265/70R16 265/65R17 265/70R17	240	35
Front and Rear Original Tire Size:	Spare Tire Size:	
P265/70R16 265/65R17 265/70R17	Full Size P265/70R16 Full Size	

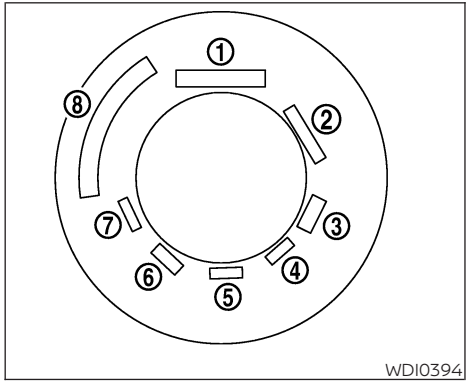

Example

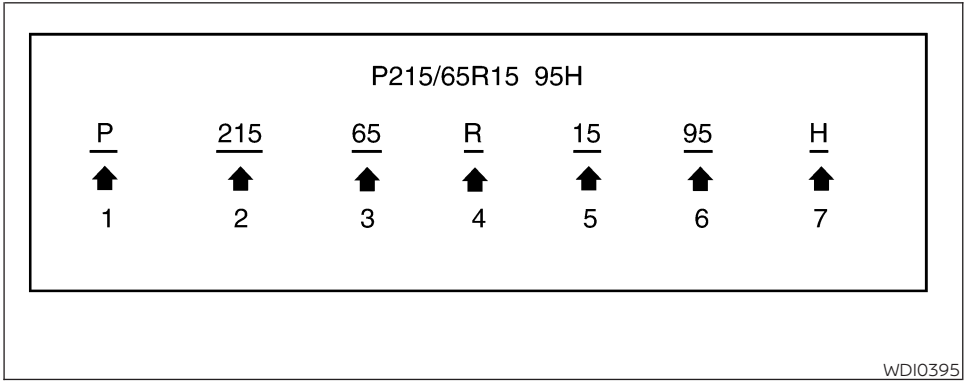

Example

TIRE LABELING

Basic information

Federal law requires tire manufacturers to place standardized information on the sidewall of all tires. This information identifies and describes the fundamental characteristics of the tire and also provides the Tire Identification Number (TIN) for safety standard certification. The TIN can be used to identify the tire in case of a recall.

① Tire size (example: P215/65R15 95H)

1. P: The "P" indicates the tire is designed for passenger vehicles (not all tires have this information).
2. Three-digit number (215): This number gives the width in millimeters of the tire from sidewall edge to sidewall edge.
3. Two-digit number (65): This number, known as the aspect ratio, gives the tire's ratio of height to width.
4. R: The "R" stands for radial.
5. Two-digit number (15): This number is the wheel or rim diameter in inches.

6. Two- or three-digit number (95): This number is the tire's load index. It is a measurement of how much weight each tire can support.
7. H: Tire speed rating. You should not drive the vehicle faster than the tire speed rating.

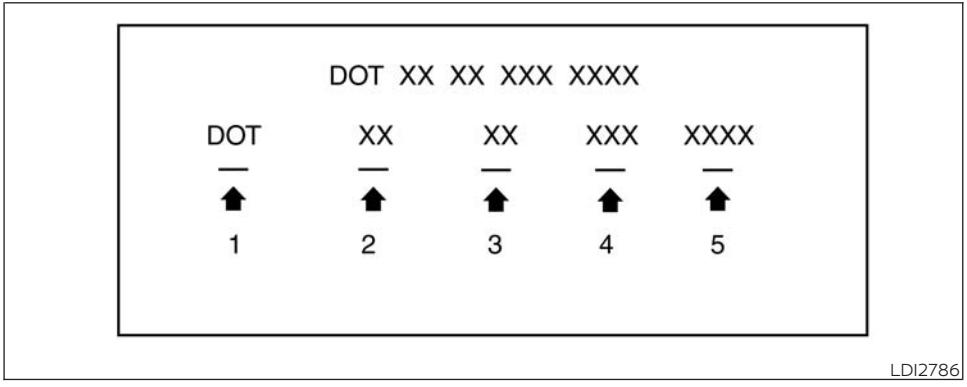

Example (Type A) (if so equipped)

② TIN (Tire Identification Number) for a new tire (example: DOT XX XX XXX XXXX)

1. DOT: Abbreviation for the "Department Of Transportation". The symbol can be placed above, below or to the left or right of the Tire Identification Number.
2. Two-digit code: Manufacturer's identification mark.
3. Two-digit code: Tire size.
4. Three-digit code: Tire type code (Optional).
5. Four numbers represent the week and year the tire was built. For example, the numbers 3103 means the 31st week of 2003. If these numbers are missing then look on the other sidewall of the tire.

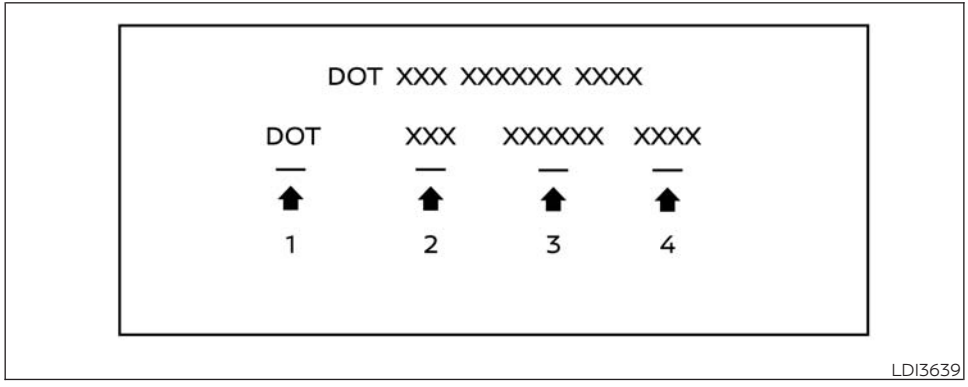

Example (Type B) (if so equipped)

② TIN (Tire Identification Number) for a new tire (example: DOT XXX XXXXXX XXXX)

1. DOT: Abbreviation for the "Department Of Transportation". The symbol can be placed above, below or to the left of the Tire Identification Number.
2. Three-digit code: Manufacturer's identification mark.
3. Six-digit code: Descriptive code used to identify significant characteristics of the tire.
4. Four numbers represent the week and year the tire was built. For example, the numbers 3103 means the 31st week of 2003.

③ Tire ply composition and material

The number of layers or plies of rubber-coated fabric in the tire. Tire manufacturers also must indicate the materials in the tire, which include steel, nylon, polyester and others.

④ Maximum permissible inflation pressure

This number is the greatest amount of air pressure that should be put in the tire. Do not exceed the maximum permissible inflation pressure.

⑤ Maximum load rating

This number indicates the maximum load in kilograms and pounds that can be carried by the tire. When replacing the tires on the vehicle, always use a tire that has the same load rating as the factory installed tire.

⑥ Term of "tubeless" or "tube type"

Indicates whether the tire requires an inner tube ("tube type") or not ("tubeless").

⑦ The word "radial"

The word "radial" is shown if the tire has radial structure.

⑧ Manufacturer or brand name

Manufacturer or brand name is shown.

Other Tire-related Terminology

In addition to the many terms that are defined throughout this section, Intended Outboard Sidewall is (1) the sidewall that contains a whitewall, bears white lettering or bears manufacturer, brand, and/or model name molding that is higher or deeper than the same molding on the other sidewall of the tire, or (2) the outward facing sidewall of an asymmetrical tire that has a particular side that must always face outward when mounted on a vehicle.

TYPES OF TIRES

Basic information

⚠WARNING

- **When changing or replacing tires, be sure all four tires are of the same type (i.e., Summer, All Season or Snow) and construction. A NISSAN dealer may be able to help you with information about tire type, size, speed rating and availability.**
- **Replacement tires may have a lower speed rating than the factory equipped tires, and may not match the potential maximum vehicle speed. Never exceed the maximum speed rating of the tire.**
- **Replacing tires with those not originally specified by NISSAN could affect the proper operation of the low tire pressure warning system.**
- **Always use tires of the same type, size, brand, construction and tread pattern on all four wheels. Failure to do so may result in a circumference difference between tires on the front and rear axles which can cause the Vehicle Dynamic Control (VDC) system to malfunction resulting in personal injury or death, excessive tire wear and may damage the transmission and differential gears.**
- **For additional information regarding tires, refer to "Important Tire Safety Information" (US) or "Tire Safety Information" (Canada) in the Warranty Information Booklet.**

All season tires

NISSAN specifies All Season tires on some models to provide good performance all year, including snowy and icy road conditions. All Season tires are identified by ALL SEASON and/or M&S on the tire sidewall. Snow tires have better snow traction than All Season tires and may be more appropriate in some areas.

Summer tires

NISSAN specifies summer tires on some models to provide superior performance on dry roads. Summer tire performance is substantially reduced in snow and ice. Summer tires do not have the tire traction rating "M&S" on the tire sidewall.

If you plan to operate your vehicle in snowy or icy conditions, NISSAN recommends the use of SNOW tires or ALL SEASON tires on all four wheels.

Snow tires

If snow tires are needed, it is necessary to select tires equivalent in size and load rating to the original equipment tires. If you do not, it can adversely affect the safety and handling of your vehicle.

Generally, snow tires have lower speed ratings than factory equipped tires and may not match the potential maximum vehicle speed. Never exceed the maximum speed rating of the tire.

If you install snow tires, they must be the same size, brand, construction and tread pattern on all four wheels.

For additional traction on icy roads, studded tires may be used. However, some U.S. states and Canadian provinces prohibit their use. Check local, state and provincial laws before installing studded tires. Skid and traction capabilities of studded snow tires on wet or dry surfaces may be poorer than that of non-studded snow tires.

TIRE CHAINS

Use of tire chains may be prohibited according to location. Check the local laws before installing tire chains. When installing tire chains, make sure they are the proper size for the tires on your vehicle and are installed according to the chain manufacturer's suggestions. **Use only SAE class "S" chains.** Class "S" chains are used on vehicles with restricted tire to vehicle clearance. Vehicles that can use Class "S" chains are designed to meet the minimum clearances between the tire and the closest vehicle suspension or body component required to accommodate the use of a winter traction device (tire chains or cables). The minimum clearances are determined using the factory equipped tire size. Other types may damage your vehicle. Use chain tensioners when recommended by the tire chain manufacturer to ensure a tight fit. Loose end links of the tire chain must be secured or removed to prevent the possibility of whipping action damage to the fenders or underbody. If possible, avoid fully loading your vehicle when using tire chains. In addition, drive at a reduced speed. Otherwise, your vehicle may be damaged and/or vehicle handling and performance may be adversely affected.

Tire chains must be installed only on the rear wheels and not on the front wheels.

Do not use tire chains on dry roads. Driving with chains in such conditions can cause damage to the various mechanisms of the vehicle due to some overstress.

Use only the 2WD range when driving on clear paved roads.

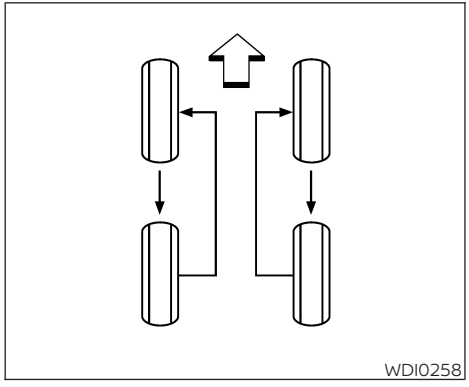

CHANGING WHEELS AND TIRES

Tire rotation

NISSAN recommends rotating the tires every 7,500 miles (12,000 km).

For additional information on tire replacing procedures, see "Flat tire" (P. 407).

As soon as possible, tighten the wheel nuts to the specified torque with a torque wrench.

Wheel nut tightening torque: 98 ft-lb (133 N·m)

The wheel nuts must be kept tightened to specifications at all times. It is recommended that wheel nuts be tightened to specification at each tire rotation interval.

⚠WARNING

- **After rotating the tires, check and adjust the tire pressure.**
- **Retighten the wheel nuts when the vehicle has been driven for 600 miles (1,000 km) (also in cases of a flat tire, etc.).**
- **Do not include the spare tire in the tire rotation.**
- **For additional information regarding tires, refer to "Important Tire Safety Information" (US) or "Tire Safety Information" (Canada) in the Warranty Information Booklet.**

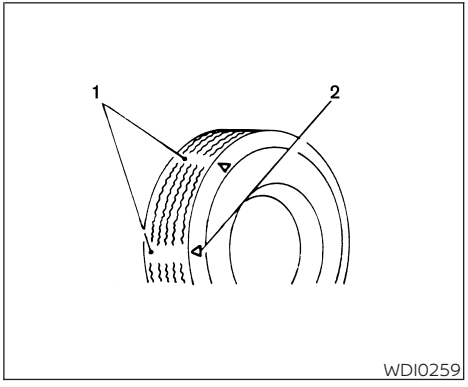

Tire wear and damage

1. Wear indicator
2. Location mark

⚠WARNING

- **Tires should be periodically inspected for wear, cracking, bulging or objects caught in the tread. If excessive wear, cracks, bulging or deep cuts are found, the tire(s) should be replaced.**
- **The original tires have built-in tread wear indicators. When the wear indicators are visible, the tire(s) should be replaced.**
- **Tires degrade with age and use. Have tires, including the spare, over 6 years old checked by a qualified technician because some tire damage may not be obvious. Replace the tires as necessary to prevent tire failure and possible personal injury.**
- **Improper service of the spare tire may result in serious personal injury. If it is necessary to repair the spare tire, it is recommended that you visit a NISSAN dealer for this service.**
- **For additional information regarding tires, refer to "Important Tire Safety Information" (US) or "Tire Safety Information" (Canada) in the Warranty Information Booklet.**

Replacing wheels and tires

When replacing a tire, use the same size, tread design, speed rating and load carrying capacity as originally equipped. For additional information, see "Wheels and tires" (P. 509).

⚠WARNING

- **The use of tires other than those recommended or the mixed use of tires of different brands, construction (bias, bias-belted or radial), or tread patterns can adversely affect the ride, braking, handling, Vehicle Dynamic Control (VDC) system, ground clearance, body-to-tire clearance, tire chain clearance, speedometer calibration, headlight aim and bumper height. Some of these effects may lead to accidents and could result in serious personal injury.**
- **If your vehicle was originally equipped with four tires that were the same size and you are only replacing two of the four tires, install the new tires on the rear axle. Placing new tires on the front axle may cause loss of vehicle control in some driving conditions and cause an accident and personal injury.**
- **If the wheels are changed for any reason, always replace with wheels which have the same off-set dimension. Wheels of a different off-set could cause premature tire wear, degrade vehicle handling characteristics, affect the VDC system and/or interference with the brake discs. Such interference can lead to decreased braking efficiency and/or early brake pad wear. For additional information on wheel off-set dimensions, see "Wheels and tires" (P. 509).**

- **When using a wheel without the TPMS such as the spare tire, the TPMS will not function and the low tire pressure warning light will flash for approximately 1 minute. The light will remain on after 1 minute. Have your tires replaced and/or TPMS system reset as soon as possible. It is recommended that you visit a NISSAN dealer for this service.**
- **Replacing tires with those not originally specified by NISSAN could affect the proper operation of the TPMS.**
- **The TPMS sensor may be damaged if it is not handled correctly. Be careful when handling the TPMS sensor.**
- **When replacing the TPMS sensor, the ID registration may be required. It is recommended that you visit a NISSAN dealer for ID registration.**
- **Do not use a valve stem cap that is not specified by NISSAN. The valve stem cap may become stuck.**
- **Be sure that the valve stem caps are correctly fitted. Otherwise the valve may be clogged up with dirt and cause a malfunction or loss of pressure.**
- **Do not install a damaged or deformed wheel or tire even if it has been repaired. Such wheels or tires could have structural damage and could fail without warning.**
- **The use of retread tires is not recommended.**
- **For additional information regarding tires, refer to "Important Tire Safety Information" (US) or "Tire Safety Information" (Canada) in the Warranty Information Booklet.**

Four-wheel drive models

4x4

⚠ CAUTION

Always use tires of the same type, size, brand, construction (bias, bias-belted or radial), and tread pattern on all four wheels. Failure to do so may result in a circumference difference between tires on the front and rear axles which will cause excessive tire wear and may damage the transmission, transfer case and differential gears.

If excessive tire wear is found, it is recommended that all four tires be replaced with tires of the same size, brand, construction and tread pattern. The tire pressure and wheel alignment should also be checked and corrected as necessary. It is recommended that you visit a NISSAN dealer for this service.

Wheel balance

Unbalanced wheels may affect vehicle handling and tire life. Even with regular use, wheels can get out of balance. Therefore, they should be balanced as required.

Wheel balance service should be performed with the wheels off the vehicle. Spin balancing the wheels on the vehicle could lead to mechanical damage.

- **For additional information regarding tires, refer to "Important Tire Safety Information" (US) or "Tire Safety Information" (Canada) in the Warranty Information Booklet.**

Care of wheels

- Wash the wheels when washing the vehicle to maintain their appearance.
- Clean the inner side of the wheels when the wheel is changed or the underside of the vehicle is washed.
- Do not use abrasive cleaners when washing the wheels.
- Inspect wheel rims regularly for dents or corrosion. Such damage may cause loss of pressure or poor seal at the tire bead.
- NISSAN recommends waxing the road wheels to protect against road salt in areas where it is used during winter.

Spare tire (FULL SIZE TEMPORARY USE ONLY spare tire)

When using a wheel without the TPMS such as the spare tire, the TPMS will not function.

Your vehicle may be equipped with a full size spare that is a different size or brand than the tires originally installed on the vehicle. This full size spare tire is intended for temporary use only and should be replaced at the first opportunity.

Observe the following precautions if the FULL SIZE TEMPORARY USE ONLY spare tire must be used. Otherwise, your vehicle could be damaged or involved in an accident:

⚠ WARNING

To help reduce the risk of a crash which may result in personal injury or death:

- **The TEMPORARY FULL SIZE spare tire should be used for emergency use only. It should be replaced with the standard tire at the first opportunity to avoid possible tire or differential damage.**
- **Drive carefully while the TEMPORARY FULL SIZE spare tire is installed. Avoid sharp turns and abrupt braking while driving. The vehicle driving performance may be affected when driving on wet or snow covered roads.**
- **When the TEMPORARY FULL SIZE spare tire is installed, the Vehicle Dynamic Control (VDC) will normally not be affected.**
- **When the TEMPORARY FULL SIZE spare tire is installed, the following systems may not work correctly:**
  - **Tire Pressure Monitoring System (TPMS)**
  - **Automatic Emergency Braking (AEB) with Pedestrian Protection**
- **Periodically check the TEMPORARY FULL SIZE spare tire inflation pressure. Always keep the TEMPORARY FULL SIZE spare tire inflated to the pressure specification shown on the Tire and Loading Information label.**
- **With the TEMPORARY FULL SIZE spare tire installed do not drive the vehicle at speeds faster than 50 mph (80 km/h).**
- **When driving on roads covered with snow or ice, the TEMPORARY FULL SIZE spare tire should be used on the front wheels and the original tire used on the rear wheels. Use tire chains only on the drive wheels.**
- **Do not use the TEMPORARY FULL SIZE spare tire on other vehicles.**
- **Do not use more than one TEMPORARY FULL SIZE spare tire at the same time.**
- **Do not tow a trailer when the TEMPORARY FULL SIZE spare tire is installed.**

⚠ CAUTION

- **Do not use tire chains on a TEMPORARY FULL SIZE spare tire. Tire chains will not fit properly and may cause damage to the vehicle.**
- **Use of the TEMPORARY FULL SIZE spare tire on a vehicle that has tires larger than were originally equipped can affect the 4WD System. This may result in a circumference difference between tires on front and rear axles which can cause the 4WD system to automatically place the vehicle in 2WD and flash the 4WD light. When the TEMPORARY FULL SIZE spare tire is replaced with a tire that matches all other tires on the vehicle, and all tires are properly inflated the 4WD system will operate normally.**

9 Maintenance and schedules

Maintenance requirements 476
Basic information 476
General maintenance 476
Scheduled maintenance 476
Where to go for service 476
General maintenance 476
Basic information 476
Explanation of general maintenance items 476
Explanation of scheduled maintenance items . . . 479
Basic information 479
Emission control system maintenance: 480
Chassis and body maintenance: 480
Maintenance schedules 481
Basic information 481
Additional maintenance items for severe operating conditions 481
3.8L 6 cylinder (VQ38DD engine model) 482

BASIC INFORMATION

Some day-to-day and regular maintenance is essential to maintain your vehicle good mechanical condition, as well as its emissions and engine performance.

It is the owner's responsibility to make sure that the scheduled maintenance, as well as general maintenance, is performed.

As the vehicle owner, you are the only one who can ensure that your vehicle receives proper maintenance. You are a vital link in the maintenance chain.

GENERAL MAINTENANCE

General maintenance includes those items which should be checked during normal day-to-day operation. They are essential for proper vehicle operation. It is your responsibility to perform these procedures regularly as prescribed.

Performing general maintenance checks requires minimal mechanical skill and only a few general automotive tools.

These checks or inspections can be done by yourself, a qualified technician or, if you prefer, a NISSAN dealer.

SCHEDULED MAINTENANCE

The maintenance items listed in this section are required to be serviced at regular intervals. However under severe driving conditions, additional or more frequent maintenance will be required.

WHERE TO GO FOR SERVICE

If maintenance service is required or your vehicle appears to malfunction, have the systems checked and serviced. It is recommended that you visit a NISSAN dealer for this service.

NISSAN technicians are well-trained specialists and are kept up-to-date with the latest service information through technical bulletins, service tips and training programs. They are fully qualified to work on NISSAN vehicles **before** work begins.

If your vehicle is involved in a collision, it is recommended that you ask your NISSAN dealer where the nearest NISSAN Certified Collision Center is located, or go to http://collision.nissanusa.com.

You can be confident that a NISSAN dealer's service department can perform the service needed to meet the maintenance requirements on your vehicle.

BASIC INFORMATION

During the normal day-to-day operation of the vehicle, general maintenance should be performed regularly as prescribed in this section. If you detect any unusual sounds, vibrations or smells, be sure to check for the cause or have it checked promptly. In addition, it is recommended that you visit a NISSAN dealer if you think that repairs are required.

When performing any checks or maintenance work, see "Maintenance precautions" (P. 432).

EXPLANATION OF GENERAL MAINTENANCE ITEMS

Basic information

⚠WARNING

Failure to follow the procedures listed within this section may result in personal injury.

Additional information on the following items with " * " is found in the "Do-it-yourself" section of this manual.

Outside the vehicle

The maintenance items listed here should be performed from time to time, unless otherwise specified.

Doors and engine hood: Check that the doors and engine hood operate properly. Also ensure that all latches lock securely. Lubricate hinges, latches, latch pins, rollers and links if necessary. Make sure that the secondary latch keeps the hood from opening when the primary latch is released.

When driving in areas using road salt or other corrosive materials, check lubrication frequently.

Check that the gas stays or struts properly and securely hold the hood, trunk, or rear hatch fully open. If the hood, trunk, or rear hatch is not held open, have the gas stays or struts replaced.

Lights*: Clean the headlights on a regular basis. Make sure that the headlights, stop lights, tail lights, turn signal lights, and other lights are all operating properly and installed securely. Also check headlight aim.

Road wheel nuts (lug nuts)*: When checking the tires, make sure no wheel nuts are missing, and check for any loose wheel nuts. Tighten if necessary.

Tire rotation*: Rotate tires at the specified interval shown in the maintenance schedule.

Tires*: Check the pressure with a gauge often and always prior to long distance trips. If necessary, adjust the pressure in all tires, including the spare, to the pressure specified. Check carefully for damage, cuts or excessive wear.

Tire Pressure Monitoring System (TPMS) tire pressure sensor: It is recommended that you replace the tire pressure sensor assembly when the tires are replaced due to wear or age.

Wheel alignment and balance: If the vehicle should pull to either side while driving on a straight and level road, or if you detect uneven or abnormal tire wear, there may be a need for wheel alignment. If the steering wheel or seat vibrates at normal highway speeds, wheel balancing may be needed.

For additional information regarding tires, refer to "Important Tire Safety Information" (US) or "Tire Safety Information" (Canada) in the Warranty Information Booklet.

Windshield: Clean the windshield on a regular basis. Check the windshield at least every six months for cracks or other damage. Have a damaged windshield repaired by a qualified repair facility. It is recommended that you have a damaged windshield repaired by a NISSAN dealer, or a NISSAN Certified Collision Center. To locate a collision center in your area, refer to http://collision.nissanusa.com.

Windshield wiper blades*: Check for cracks or wear if they do not wipe properly.

Inside the vehicle

The maintenance items listed here should be checked on a regular basis, such as when performing scheduled maintenance, cleaning the vehicle, etc.

Accelerator pedal: Check the pedal for smooth operation and make sure the pedal does not catch or require uneven effort. Keep the floor mat away from the pedal.

Automatic transmission P (Park) mechanism: On a fairly steep hill check that the vehicle is held securely with the shift lever in the P (Park) position without applying any brakes.

Brake pedal: Check the pedal for smooth operation. If the brake pedal suddenly goes down further than normal, the pedal feels spongy or the vehicle seems to take longer to stop, have your vehicle checked immediately. It is recommended that you visit a NISSAN dealer for this service. Keep the floor mat away from the pedal.

Brakes: Check that the brakes do not pull the vehicle to one side when applied.

Parking brake: Check the parking brake operation regularly. The vehicle should be securely held on a fairly steep hill with only the parking brake applied. If the parking brake needs adjustment, it is recommended that you visit a NISSAN dealer for this service.

Seats: Check seat position controls such as seat adjusters, seatback recliner, etc., to ensure they operate smoothly and all latches lock securely in every position. Check that the head restraints/headrests move up and down smoothly and the locks (if so equipped) hold securely in all latched positions.

Seat belts: Check that all parts of the seat belt system (for example, buckles, anchors, adjusters and retractors) operate properly and smoothly, and are installed securely. Check the belt webbing for cuts, fraying, wear or damage.

Steering wheel: Check for changes in the steering system, such as excessive free play, hard steering or strange noises.

Warning lights and chimes: Make sure all warning lights and chimes are operating properly.

Windshield defroster: Check that the air comes out of the defroster outlets properly and in sufficient quantity when operating the heater or air conditioner.

Windshield wiper and washer*: Check that the wipers and washer operate properly and that the wipers do not streak.

Under the hood and vehicle

The maintenance items listed here should be checked periodically (for example, each time you check the engine oil or refuel).

Battery (for maintenance free batteries)*: This vehicle is equipped with a sealed maintenance free battery. It is recommended that you visit a NISSAN dealer for service.

NOTE:

Care should be taken to avoid situations that can lead to potential battery discharge and potential no-start conditions such as:

1. **Installation or extended use of electronic accessories that consume battery power when the engine is not running (Phone chargers, GPS, DVD players, etc.).**
2. **Vehicle is not driven regularly and/or only driven short distances.**

In these cases, the battery may need to be charged to maintain battery health.

Brake fluid level*: Make sure that the fluid level is between the MAX and MIN lines on the reservoir.

Engine coolant level*: Check the coolant level when the engine is cold.

Engine drive belts*: Check engine drive belts for wear, fraying or cracking and for proper tension. Replace any damaged drive belts.

Engine oil level*: Check the level after parking the vehicle on a level spot and turning off the engine. Wait more than 15 minutes for the oil to drain back into the oil pan.

Exhaust system: Make sure there are no loose supports, cracks or holes. If the sound of the exhaust seems unusual or there is a smell of exhaust fumes, immediately have the exhaust system inspected. It is recommended that you visit a NISSAN dealer for this service. For additional information, see "Exhaust gas (carbon monoxide)" (P. 273).

Fluid leaks: Check under the vehicle for fuel, oil, water or other fluid leaks after the vehicle has been parked for a while. Water dripping from the air conditioner after use is normal. If you should notice any leaks or if fuel fumes are evident, check for the cause and have it corrected immediately.

Power steering fluid level* and lines: Check the level when the fluid is cold, with the engine off. Check the lines for proper attachment, leaks, cracks, etc.

Radiator and hoses: Check the front of the radiator and clean off any dirt, insects, leaves, etc., that may have accumulated. Make sure the hoses have no cracks, deformation, rot or loose connections.

Underbody: The underbody is frequently exposed to corrosive substances such as those used on icy roads or to control dust. It is very important to remove these substances, otherwise rust may form on the floor pan, frame, fuel lines and around the exhaust system. At the end of winter, the underbody should be thoroughly flushed with plain water, being careful to clean those areas where mud and dirt may accumulate. For additional information, see "Cleaning exterior" (P. 424).

Windshield-washer fluid*: Check that there is adequate fluid in the reservoir.

EXPLANATION OF SCHEDULED MAINTENANCE ITEMS

BASIC INFORMATION

The following descriptions are provided to give you a better understanding of the scheduled maintenance items that should be regularly checked or replaced. The maintenance schedule indicates at which mileage/time intervals each item requires service.

In addition to scheduled maintenance, your vehicle requires that some items be checked during normal day-to-day operation. For additional information, see "General maintenance" (P. 476).

Items marked with **"*"** are recommended by NISSAN for reliable vehicle operation. You are not required to perform maintenance on these items in order to maintain the warranties which come with your NISSAN. Other maintenance items and intervals are required.

When applicable, additional information can be found in the "Do-it-yourself" section of this manual.

NOTE:

NISSAN does not advocate the use of non-OEM approved aftermarket flushing systems and strongly advises against performing these services on a NISSAN product. Many of the aftermarket flushing systems use non-OEM approved chemicals or solvents, the use of which has not been validated by NISSAN.

For recommended fuel, lubricants, fluids, grease, and refrigerant, see "Recommended fluids/lubricants and capacities" (P. 501).

EMISSION CONTROL SYSTEM MAINTENANCE:

Air cleaner filter: Replace at specified intervals. When driving for prolonged periods in dusty conditions, check/replace the filter more frequently.

Engine coolant*: Replace coolant at the specified interval. When adding or replacing coolant, be sure to use only Genuine NISSAN Long Life Antifreeze/Coolant (blue) or equivalent with the proper mixture. (For additional information on the proper mixture for your area, see "Engine cooling system" (P. 434).

Engine drive belts*: Check engine drive belts for wear, fraying or cracking and for proper tension. Replace any damaged drive belts.

NOTE: Mixing any other type of coolant or the use of non-distilled water may reduce the recommended service interval of the coolant.

Engine oil and oil filter: Replace engine oil and oil filter at the specified intervals. For recommended oil grade and viscosity, see "Recommended fluids/lubricants and capacities" (P. 501).

Engine valve clearance*: Inspect only if valve noise increases. Adjust valve clearance if necessary.

Fuel filter: Periodic maintenance is not required. (in-tank type filter)

Fuel lines/connections*: Check the fuel hoses, piping and connections for leaks, looseness, or deterioration. Tighten connections or replace parts as necessary.

Fuel tank vapor vent system*: Check vapor lines for leaks or looseness. Tighten connections or replace parts as necessary.

Spark plugs: Replace at specified intervals. Install new plugs of the same type as originally equipped.

CHASSIS AND BODY MAINTENANCE:

Brake lines and cables: Visually inspect for proper installation. Check for chafing, cracks, deterioration, and signs of leaking. Replace any deteriorated or damaged parts immediately.

Brake pads and rotors: Check for wear, deterioration and fluid leaks. Replace any deteriorated or damaged parts immediately.

Exhaust system: Visually inspect the exhaust pipes, muffler and hangers for leaks, cracks, deterioration, and damage. Tighten connections or replace parts as necessary.

In-cabin microfilter: Replace at specified intervals. When driving for prolonged periods in dusty conditions, replace the filter more frequently.

Propeller shaft(s): Check for damage, looseness, and grease leakage.

Steering gear and linkage, axle and suspension parts, drive shaft boots: Check for damage, looseness, and leakage of oil or grease. Under severe driving conditions, inspect more frequently.

Tire rotation: Rotate tires at the specified interval shown in the maintenance schedule. When rotating tires, check for damage and uneven wear. Replace if necessary.

Transmission fluid/oil, differential gear oil and transfer fluid: Visually inspect for signs of leakage at specified intervals.

Off-road maintenance: Check the following items frequently whenever you drive off-road through deep sand, mud or water:

- Brake pads and rotors
- Brake linings and drums
- Brake lines and hoses
- Differential, transmission and transfer fluid
- Steering linkage
- Propeller shaft(s) and front drive shafts
- Air cleaner filter
- Clutch housing drain (4WD only)

BASIC INFORMATION

To help ensure smooth, safe and economical driving, NISSAN provides two maintenance schedules that may be used, depending upon the conditions in which you usually drive. These schedules contain both distance and time intervals, up to 120,000 miles (192,000 km)/96 months. For most people, the odometer reading will indicate when service is needed. However, if you drive very little, your vehicle should be serviced at the regular time intervals shown in the schedule.

After 120,000 miles (192,000 km)/96 months, continue maintenance at the same mileage/time intervals.

ADDITIONAL MAINTENANCE ITEMS FOR SEVERE OPERATING CONDITIONS

Additional maintenance items for severe operating conditions should be performed on vehicles that are driven under especially demanding conditions. Additional maintenance items should be performed if you primarily operate your vehicle under the following conditions:

- Repeated short trips of less than 5 miles (8 km).
- Repeated short trips of less than 10 miles (16 km) with outside temperatures remaining below freezing.
- Operating in hot weather in stop-and-go "rush hour" traffic.
- Extensive idling and/or low speed driving for long distances, such as police, taxi or door-to-door delivery use.
- Driving in dusty conditions.
- Driving on rough, muddy or salt spread roads.
- Towing a trailer, using a camper or using a car-top carrier.

If your vehicle is mostly operated under the severe conditions, follow the severe use maintenance intervals shown in the maintenance schedule.

3.8L 6 CYLINDER (VQ38DD engine model)

Basic information

The following shows the maintenance schedule.

Choose the maintenance schedule needed based on your vehicle driving conditions.

After 120,000 miles (192,000 km)/96 months, continue maintenance at the same mileage/time interval.

5,000 miles/(8,000 km)/6 months

Perform at number of miles, kilometers or months, whichever comes first.

Standard maintenance:

Not applicable. Proceed to next interval.

Severe use maintenance:

Inspections:

- Brake pads and rotors
- Steering gear and linkage
- Axle and suspension parts
- Drive shaft boots (4WD models)
- Propeller shaft (4WD models)
- Exhaust system

Essential:

- Replace engine oil & filter
- Lubricate propeller shaft grease (4WD models)

7,500 miles/(12,000 km)/6 months

Perform at number of miles, kilometers or months, whichever comes first.

Standard maintenance:

Essential:

- Replace engine oil & filter
- Tire rotation

Severe use maintenance:

Not applicable. Proceed to next interval.

10,000 miles/(16,000 km)/ 12 months

Perform at number of miles, kilometers or months, whichever comes first.

Standard maintenance:

Not applicable. Proceed to next interval

Severe use maintenance:

Inspections:

- Brake pads and rotors
- Steering gear and linkage
- Axle and suspension parts
- Drive shaft boots (4WD models)
- Propeller shaft (4WD models)
- Exhaust system

Essential:

- Replace engine oil & filter
- Replace brake fluid
- Lubricate propeller shaft grease (4WD models)

15,000 miles/(24,000 km)/ 12 months

Perform at number of miles, kilometers or months, whichever comes first.

Standard maintenance:

Inspections:

- Automatic transmission fluid (1)
- Brake lines and cables
- Brake pads and rotors
- Drive shaft boots (4WD models)
- Propeller shaft (4WD models)
- Differential gear oil
- Transfer fluid

Essential:

- Replace engine oil & filter
- Replace in-cabin microfilter
- Lubricate propeller shaft grease (4WD models) (4)
- Tire rotation

Severe use maintenance:

Not applicable. Proceed to next interval.

(1) Request a NISSAN dealer to inspect the fluid deterioration data using a CONSULT. If the deterioration data is more than 77000, replace the AT fluid.

(2) The propeller shaft should be re-greased after being immersed in water.

15,000 miles/(24,000 km)/ 18 months

Perform at number of miles, kilometers or months, whichever comes first.

Standard maintenance:

Not applicable. Proceed to next interval

Severe use maintenance:

Inspections:

- Brake pads and rotors
- Steering gear and linkage
- Axle and suspension parts
- Drive shaft boots (4WD models)
- Propeller shaft (4WD models)
- Exhaust system

Essential:

- Replace engine oil & filter
- Lubricate propeller shaft grease (4WD models)

20,000 miles/(32,000 km)/ 24 months

Perform at number of miles, kilometers or months, whichever comes first.

Standard maintenance:

Not applicable. Proceed to next interval

Severe use maintenance:

Inspections:

- Brake pads and rotors
- Steering gear and linkage
- Axle and suspension parts
- Drive shaft boots (4WD models)
- Propeller shaft (4WD models)
- Exhaust system

Essential:

- Replace engine oil & filter
- Replace brake fluid
- Replace transfer fluid
- Replace differential gear oil
- Lubricate propeller shaft grease (4WD models)

22,500 miles/(36,000 km)/ 18 months

Perform at number of miles, kilometers or months, whichever comes first.

Standard maintenance:

Inspections:

- Intelligent Key battery

Essential:

- Replace engine oil & filter
- Tire rotation

Severe use maintenance:

Not applicable. Proceed to next interval

25,000 miles/(40,000 km)/ 30 months

Perform at number of miles, kilometers or months, whichever comes first.

Standard maintenance:

Not applicable. Proceed to next interval

Severe use maintenance:

Inspections:

- Brake pads and rotors
- Steering gear and linkage
- Axle and suspension parts
- Drive shaft boots (4WD models)
- Propeller shaft (4WD models)
- Exhaust system

Essential:

- Replace engine oil & filter
- Lubricate propeller shaft grease (4WD models)

30,000 miles/(48,000 km)/ 24 months

Perform at number of miles, kilometers or months, whichever comes first.

Standard maintenance:

Inspections:

- Automatic transmission fluid (1)
- Brake lines and cables
- Brake pads and rotors
- Fuel tank vapor vent system*
- Fuel lines/connections*
- Exhaust system
- Drive shaft boots (4WD models)
- Propeller shaft (4WD models)
- Steering gear and linkage
- Axle and suspension parts
- Differential gear oil
- Transfer fluid

Essential:

- Replace air cleaner filter (2)
- Replace brake fluid
- Replace engine oil & filter
- Replace in-cabin microfilter
- Lubricate propeller shaft grease (4WD models) (3)
- Tire rotation

Severe use maintenance:

Essential:

- Replace automatic transmission fluid

* Maintenance items and intervals with "*" are recommended by NISSAN for reliable vehicle operation. The owner need not perform such maintenance in order to maintain the emission warranty or manufacturer recall liability. Other maintenance items and intervals are required.

(1) Request a NISSAN dealer to inspect the fluid deterioration data using a CONSULT. If the deterioration data is more than 77000, replace the AT fluid.

(2) If operating mainly in dusty conditions, more frequent maintenance may be required.

(3) The propeller shaft should be re-greased after being immersed in water.

30,000 miles/(48,000 km)/ 36 months

Perform at number of miles, kilometers or months, whichever comes first.

Standard maintenance:

Not applicable. Proceed to next interval

Severe use maintenance:

Inspections:

- Brake pads and rotors
- Steering gear and linkage
- Axle and suspension parts
- Drive shaft boots (4WD models)
- Propeller shaft (4WD models)
- Exhaust system

Essential:

- Replace engine oil & filter
- Replace brake fluid
- Lubricate propeller shaft grease (4WD models)

35,000 miles/(56,000 km)/ 42 months

Perform at number of miles, kilometers or months, whichever comes first.

Standard maintenance:

Not applicable. Proceed to next interval

Severe use maintenance:

Inspections:

- Brake pads and rotors
- Steering gear and linkage
- Axle and suspension parts
- Drive shaft boots (4WD models)
- Propeller shaft (4WD models)
- Exhaust system

Essential:

- Replace engine oil & filter
- Lubricate propeller shaft grease (4WD models)

37,500 miles/(60,000 km)/ 30 months

Perform at number of miles, kilometers or months, whichever comes first.

Standard maintenance:

Essential:

- Replace engine oil & filter
- Tire rotation

Severe use maintenance:

Not applicable. Proceed to next interval

40,000 miles/(64,000 km)/ 48 months

Perform at number of miles, kilometers or months, whichever comes first.

Standard maintenance:

Not applicable. Proceed to next interval

Severe use maintenance:

Inspections:

- Brake pads and rotors
- Steering gear and linkage
- Axle and suspension parts
- Drive shaft boots (4WD models)
- Propeller shaft (4WD models)
- Exhaust system

Essential:

- Replace engine oil & filter
- Replace brake fluid
- Replace transfer fluid
- Replace differential gear oil
- Lubricate propeller shaft grease (4WD models)

45,000 miles/(72,000 km)/ 36 months

Perform at number of miles, kilometers or months, whichever comes first.

Standard maintenance:

Inspections:

- Automatic transmission fluid (1)
- Brake lines and cables
- Brake pads and rotors
- Drive shaft boots (4WD models)
- Propeller shaft (4WD models)
- Differential gear oil
- Transfer fluid

Essential:

- Replace engine oil & filter
- Replace in-cabin microfilter
- Replace Intelligent Key battery
- Lubricate propeller shaft grease (4WD models) (2)
- Tire rotation

Severe use maintenance:

Not applicable. Proceed to next interval

(1) Request a NISSAN dealer to inspect the fluid deterioration data using a CONSULT. If the deterioration data is more than 77000, replace the AT fluid.

(2) The propeller shaft should be re-greased after being immersed in water.

45,000 miles/(72,000 km)/ 54 months

Perform at number of miles, kilometers or months, whichever comes first.

Standard maintenance:

Not applicable. Proceed to next interval

Severe use maintenance:

Inspections:

- Brake pads & rotors
- Steering gear and linkage
- Axle and suspension parts
- Drive shaft boots (4WD models)
- Propeller shaft (4WD models)
- Exhaust system

Essential:

- Replace engine oil & filter
- Lubricate propeller shaft grease (4WD models)

50,000 miles/(80,000 km)/ 60 months

Perform at number of miles, kilometers or months, whichever comes first.

Standard maintenance:

Not applicable. Proceed to next interval

Severe use maintenance:

Inspections:

- Brake pads and rotors
- Steering gear and linkage
- Axle and suspension parts
- Drive shaft boots (4WD models)
- Propeller shaft (4WD models)
- Exhaust system

Essential:

- Replace engine oil & filter
- Replace brake fluid
- Lubricate propeller shaft grease (4WD models)

52,500 miles/(84,000 km)/ 42 months

Perform at number of miles, kilometers or months, whichever comes first.

Standard maintenance:

Essential:

- Replace engine oil & filter
- Tire rotation

Severe use maintenance:

Not applicable. Proceed to next interval

55,000 miles/(88,000 km)/ 66 months

Perform at number of miles, kilometers or months, whichever comes first.

Standard maintenance:

Not applicable. Proceed to next interval

Severe use maintenance:

Inspections:

- Brake pads and rotors
- Steering gear and linkage
- Axle and suspension parts
- Drive shaft boots (4WD models)
- Propeller shaft (4WD models)
- Exhaust system

Essential:

- Replace engine oil & filter
- Lubricate propeller shaft grease (4WD models)

60,000 miles/(96,000 km)/ 48 months

Perform at number of miles, kilometers or months, whichever comes first.

Standard maintenance:

Inspections:

- Automatic transmission fluid (1)
- Brake lines and cables
- Brake pads and rotors
- Engine drive belts*
- Fuel tank vapor vent system*
- Fuel lines/connections*
- Exhaust system
- Drive shaft boots (4WD models)
- Propeller shaft (4WD models)
- Steering gear and linkage
- Axle and suspension parts
- Differential gear oil
- Transfer fluid

Essential:

- Replace air cleaner filter (2)
- Replace brake fluid
- Replace engine oil & filter
- Replace in-cabin microfilter
- Lubricate propeller shaft grease (4WD models) (3)
- Tire rotation

Severe use maintenance:

Essential:

- Replace automatic transmission fluid

* Maintenance items and intervals with "*" are recommended by NISSAN for reliable vehicle operation. The owner need not perform such maintenance in order to maintain the emission warranty or manufacturer recall liability. Other maintenance items and intervals are required.

(1) Request a NISSAN dealer to inspect the fluid deterioration data using a CONSULT. If the deterioration data is more than 77000, replace the AT fluid.

(2) If operating mainly in dusty conditions, more frequent maintenance may be required.

(3) The propeller shaft should be re-greased after being immersed in water.

60,000 miles/(96,000 km)/ 72 months

Perform at number of miles, kilometers or months, whichever comes first.

Standard maintenance:

Not applicable. Proceed to next interval

Severe use maintenance:

Inspections:

- Brake pads and rotors
- Steering gear and linkage
- Axle and suspension parts
- Drive shaft boots (4WD models)
- Propeller shaft (4WD models)
- Exhaust system

Essential:

- Replace engine oil & filter
- Replace brake fluid
- Replace transfer fluid
- Replace differential gear oil
- Lubricate propeller shaft grease (4WD models)

65,000 miles/(104,000 km)/ 78 months

Perform at number of miles, kilometers or months, whichever comes first.

Standard maintenance:

Not applicable. Proceed to next interval

Severe use maintenance:

Inspections:

- Brake pads and rotors
- Steering gear and linkage
- Axle and suspension parts
- Drive shaft boots (4WD models)
- Propeller shaft (4WD models)
- Exhaust system

Essential:

- Replace engine oil & filter
- Lubricate propeller shaft grease (4WD models)

67,500 miles/(108,000 km)/ 54 months

Perform at number of miles, kilometers or months, whichever comes first.

Standard maintenance:

Essential:

- Replace engine oil & filter
- Replace Intelligent Key battery
- Tire rotation

Severe use maintenance:

Not applicable. Proceed to next interval

70,000 miles/(112,000 km)/ 84 months

Perform at number of miles, kilometers or months, whichever comes first.

Standard maintenance:

Not applicable. Proceed to next interval

Severe use maintenance:

Inspections:

- Brake pads and rotors
- Steering gear and linkage
- Axle and suspension parts
- Drive shaft boots (4WD models)
- Propeller shaft (4WD models)
- Exhaust system

Essential:

- Replace engine oil & filter
- Replace brake fluid
- Lubricate propeller shaft grease (4WD models)

75,000 miles/(120,000 km)/ 60 months

Perform at number of miles, kilometers or months, whichever comes first.

Standard maintenance:

Inspections:

- Automatic transmission fluid (1)
- Brake lines and cables
- Brake pads and rotors
- Engine drive belt*
- Drive shaft boots (4WD models)
- Propeller shaft (4WD models)
- Differential gear oil
- Transfer fluid

Essential:

- Replace engine oil & filter
- Replace in-cabin microfilter
- Lubricate propeller shaft grease (4WD models) (2)
- Tire rotation

Severe use maintenance:

Not applicable. Proceed to next interval

* Maintenance items and intervals with "*" are recommended by NISSAN for reliable vehicle operation. The owner need not perform such maintenance in order to maintain the emission warranty or manufacturer recall liability. Other maintenance items and intervals are required.

(1) Request a NISSAN dealer to inspect the fluid deterioration data using a CONSULT. If the deterioration data is more than 77000, replace the AT fluid.

(2) The propeller shaft should be re-greased after being immersed in water.

75,000 miles/(120,000 km)/ 90 months

Perform at number of miles, kilometers or months, whichever comes first.

Standard maintenance:

Not applicable. Proceed to next interval

Severe use maintenance:

Inspections:

- Brake pads and rotors
- Steering gear and linkage
- Axle and suspension parts
- Drive shaft boots (4WD models)
- Propeller shaft (4WD models)
- Exhaust system

Essential:

- Replace engine oil & filter
- Lubricate propeller shaft grease (4WD models)

80,000 miles/(128,000 km)/ 96 months

Perform at number of miles, kilometers or months, whichever comes first.

Standard maintenance:

Not applicable. Proceed to next interval

Severe use maintenance:

Inspections:

- Brake pads and rotors
- Steering gear and linkage
- Axle and suspension parts
- Drive shaft boots (4WD models)
- Propeller shaft (4WD models)
- Exhaust system

Essential:

- Replace engine oil & filter
- Replace brake fluid
- Replace transfer fluid
- Replace differential gear oil
- Lubricate propeller shaft grease (4WD models)

82,500 miles/(132,000 km)/ 66 months

Perform at number of miles, kilometers or months, whichever comes first.

Standard maintenance:

Essential:

- Replace engine oil & filter
- Tire rotation

Severe use maintenance:

Not applicable. Proceed to next interval

85,000 miles/(136,000 km)/ 102 months

Perform at number of miles, kilometers or months, whichever comes first.

Standard maintenance:

Not applicable. Proceed to next interval

Severe use maintenance:

Inspections:

- Brake pads and rotors
- Steering gear and linkage
- Axle and suspension parts
- Drive shaft boots (4WD models)
- Propeller shaft (4WD models)
- Exhaust system

Essential:

- Replace engine oil & filter
- Lubricate propeller shaft grease (4WD models)

90,000 miles/(144,000 km)/ 72 months

Perform at number of miles, kilometers or months, whichever comes first.

Standard maintenance:

Inspections:

- Automatic transmission fluid (1)
- Brake lines and cables
- Brake pads and rotors
- Engine drive belts*
- Fuel tank vapor vent system*
- Fuel lines/connections*
- Exhaust system
- Drive shaft boots (4WD models)
- Propeller shaft (4WD models)
- Steering gear and linkage
- Axle and suspension parts
- Differential gear oil
- Transfer fluid

Essential:

- Replace air cleaner filter (2)
- Replace brake fluid
- Replace engine oil & filter
- Replace in-cabin microfilter
- Replace Intelligent Key battery
- Lubricate propeller shaft grease (4WD models) (3)
- Tire rotation

Severe use maintenance:

Essential:

- Replace automatic transmission fluid

* Maintenance items and intervals with "*" are recommended by NISSAN for reliable vehicle operation. The owner need not perform such maintenance in order to maintain the emission warranty or manufacturer recall liability. Other maintenance items and intervals are required.

(1) Request a NISSAN dealer to inspect the fluid deterioration data using a CONSULT. If the deterioration data is more than 77000, replace the AT fluid.

(2) If operating mainly in dusty conditions, more frequent maintenance may be required.

(3) The propeller shaft should be re-greased after being immersed in water.

90,000 miles/(144,000 km)/ 108 months

Perform at number of miles, kilometers or months, whichever comes first.

Standard maintenance:

Not applicable. Proceed to next interval

Severe use maintenance:

Inspections:

- Brake pads and rotors
- Steering gear and linkage
- Axle and suspension parts
- Drive shaft boots (4WD models)
- Propeller shaft (4WD models)
- Exhaust system

Essential:

- Replace engine oil & filter
- Replace brake fluid
- Lubricate propeller shaft grease (4WD models)

95,000 miles/(152,000 km)/ 114 months

Perform at number of miles, kilometers or months, whichever comes first.

Standard maintenance:

Not applicable. Proceed to next interval

Severe use maintenance:

Inspections:

- Brake pads and rotors
- Steering gear and linkage
- Axle and suspension parts
- Drive shaft boots (4WD models)
- Propeller shaft (4WD models)
- Exhaust system

Essential:

- Replace engine oil & filter
- Lubricate propeller shaft grease (4WD models)

97,500 miles/(156,000 km)/ 78 months

Perform at number of miles, kilometers or months, whichever comes first.

Standard maintenance:

Essential:

- Replace engine oil & filter
- Tire rotation

Severe use maintenance:

Not applicable. Proceed to next interval

100,000 miles/(160,000 km)/ 120 months

Perform at number of miles, kilometers or months, whichever comes first.

Standard maintenance:

Not applicable. Proceed to next interval

Severe use maintenance:

Inspections:

- Brake pads and rotors
- Steering gear and linkage
- Axle and suspension parts
- Drive shaft boots (4WD models)
- Propeller shaft (4WD models)
- Exhaust system

Essential:

- Replace engine oil & filter
- Replace brake fluid
- Replace transfer fluid
- Replace differential gear oil
- Lubricate propeller shaft grease (4WD models)

105,000 miles/(168,000 km)/ 84 months

Perform at number of miles, kilometers or months, whichever comes first.

Standard maintenance:

Inspections:

- Automatic transmission fluid (1)
- Brake lines and cables
- Brake pads and rotors
- Engine drive belt*
- Drive shaft boots (4WD models)
- Propeller shaft (4WD models)
- Differential gear oil
- Transfer fluid

Essential:

- Replace engine oil & filter
- Replace in-cabin microfilter
- Lubricate propeller shaft grease (4WD models) (2)
- Replace spark plugs (6)
- Tire rotation
- Replace engine coolant* (3)

Severe use maintenance:

Not applicable. Proceed to next interval

* Maintenance items and intervals with "*" are recommended by NISSAN for reliable vehicle operation. The owner need not perform such maintenance in order to maintain the emission warranty or manufacturer recall liability. Other maintenance items and intervals are required.

(1) Request a NISSAN dealer to inspect the fluid deterioration data using a CONSULT. If the deterioration data is more than 77000, replace the AT fluid.

(2) The propeller shaft should be re-greased after being immersed in water.

(3) First replacement interval is 105,000 miles (168,000 km) or 84 months. After first replacement, replace every 75,000 miles (120,000 km) or 60 months.

105,000 miles/(168,000 km)/ 126 months

Perform at number of miles, kilometers or months, whichever comes first.

Standard maintenance:

Not applicable. Proceed to next interval

Severe use maintenance:

Inspections:

- Brake pads and rotors
- Steering gear and linkage
- Axle and suspension parts
- Drive shaft boots (4WD models)
- Propeller shaft (4WD models)
- Exhaust system

Essential:

- Replace engine oil & filter
- Lubricate propeller shaft grease (4WD models)

110,000 miles/(176,000 km)/ 132 months

Perform at number of miles, kilometers or months, whichever comes first.

Standard maintenance:

Not applicable. Proceed to next interval

Severe use maintenance:

Inspections:

- Brake pads and rotors
- Steering gear and linkage
- Axle and suspension parts
- Drive shaft boots (4WD models)
- Propeller shaft (4WD models)
- Exhaust system

Essential:

- Replace engine oil & filter
- Replace brake fluid
- Lubricate propeller shaft grease (4WD models)

112,500 miles/(180,000 km)/ 90 months

Perform at number of miles, kilometers or months, whichever comes first.

Standard maintenance:

Essential:

- Replace engine oil & filter
- Replace Intelligent Key battery
- Tire rotation

Severe use maintenance:

Not applicable. Proceed to next interval

115,000 miles/(184,000 km)/ 138 months

Perform at number of miles, kilometers or months, whichever comes first.

Standard maintenance:

Not applicable. Proceed to next interval

Severe use maintenance:

Inspections:

- Brake pads and rotors
- Steering gear and linkage
- Axle and suspension parts
- Drive shaft boots (4WD models)
- Propeller shaft (4WD models)
- Exhaust system

Essential:

- Replace engine oil & filter
- Lubricate propeller shaft grease (4WD models)

120,000 miles/(192,000 km)/ 96 months

Perform at number of miles, kilometers or months, whichever comes first.

Standard maintenance:

Inspections:

- Automatic transmission fluid (1)
- Brake lines and cables
- Brake pads and rotors
- Engine drive belts*
- Fuel tank vapor vent system*
- Fuel lines/connections*
- Exhaust system
- Drive shaft boots (4WD models)
- Propeller shaft (4WD models)
- Steering gear and linkage
- Axle and suspension parts
- Differential gear oil
- Transfer fluid

Essential:

- Replace air cleaner filter (2)
- Replace brake fluid
- Replace engine oil & filter
- Replace in-cabin microfilter
- Lubricate propeller shaft grease (4WD models) (3)
- Tire rotation

Severe use maintenance:

Not applicable. Proceed to next interval

* Maintenance items and intervals with "*" are recommended by NISSAN for reliable vehicle operation. The owner need not perform such maintenance in order to maintain the emission warranty or manufacturer recall liability. Other maintenance items and intervals are required.

(1) Request a NISSAN dealer to inspect the fluid deterioration data using a CONSULT. If the deterioration data is more than 77000, replace the AT fluid.

(2) If operating mainly in dusty conditions, more frequent maintenance may be required.

(3) The propeller shaft should be re-greased after being immersed in water.

MEMO

10 Technical and consumer information

Recommended fluids/lubricants and capacities . . . 501
- Basic information . . . 501
- Fuel . . . 501
- Engine oil drain and refill . . . 501
- Engine coolant with reservoir . . . 501
- Automatic transmission fluid (ATF) . . . 501
- Transfer fluid . . . 502
- Front final drive oil . . . 502
- Rear final drive oil . . . 502
- Power steering fluid (PSF) . . . 502
- Brake fluid . . . 502
- Multi-purpose grease . . . 502
- Air conditioning system refrigerant . . . 502
- Air conditioning system oil . . . 503
- Windshield-washer fluid . . . 503
- Fuel recommendation . . . 503
- Engine oil and oil filter recommendations . . . 506
- Air conditioner system refrigerant and oil recommendations . . . 507

Specifications . . . 508
- Engine . . . 508
- Wheels and tires . . . 509
- Dimensions and weights . . . 509

When traveling or registering in another country . . . 512

Vehicle identification . . . 512
- Vehicle Identification Number (VIN) plate . . . 512
- Engine serial number . . . 512
- F.M.V.S.S./C.M.V.S.S. certification label . . . 513
- Emission control information label . . . 513
- Tire and Loading Information label . . . 514
- Air conditioner specification label . . . 514

Installing front license plate . . . 515

Vehicle loading information . . . 516
- Basic information . . . 516
- Terms . . . 516
- Vehicle load capacity . . . 517
- Securing the load . . . 519
- Utili-track® channel system (if so equipped) . . . 520
- Loading tips . . . 523
- Measurement of weights . . . 524

Truck-camper loading information . . . 524
- Basic information . . . 524
- Special Body vehicles . . . 524
- Location for center of gravity . . . 525
- Vehicle load weight capacity . . . 525

Towing a trailer 526
Basic information 526
Maximum load limits 526
Towing load/specification 530
Towing safety 533
Flat towing your vehicle 540
Flat towing – 4WD with automatic transmission 540
Flat towing – 2WD with automatic transmission 540
Automatic Transmission 541
Uniform tire quality grading 541
Reporting safety defects 542
Readiness for Inspection/Maintenance (I/M) test 543
Emission control system warranty 544
Event Data Recorders (EDR) 544
Owner's Manual/Service Manual order information 545

BASIC INFORMATION

The following are approximate capacities. The actual refill capacities may be a little different. When refilling, follow the procedure described in the "Do-it-yourself" section to determine the proper refill capacity.

FUEL

- For additional information, see "Fuel recommendation" (P. 503).

Capacity (approximate)	
Metric Measure	80 L
US Measure	21-1/8 gal
Imperial Mesure	17-5/8 gal

ENGINE OIL DRAIN AND REFILL

- For additional information, see "Engine oil" (P. 436).
- Genuine "NISSAN Motor Oil 0W-20 SP" (or equivalent) is recommended.
- If the above motor oil (or engine oil) is not available, a synthetic 0W-20 SP GF-6A motor oil (or engine oil) may be used. Damage caused by the use of motor oil (or engine oil) other than as recommended is not covered under NISSAN's New Vehicle Limited Warranty. For additional information, see "Engine oil and oil filter recommendations" (P. 506).

Capacity (approximate)	
With oil filter change	
Metric Measure	5 L
US Measure	5-1/4 qt
Imperial Measure	4-3/8 qt
Without oil filter change	
Metric Measure	4.7 L
US Measure	5 qt
Imperial Measure	4-1/8 qt

ENGINE COOLANT WITH RESERVOIR

- Pre-diluted Genuine NISSAN Long Life Antifreeze/Coolant (blue) or equivalent.

Capacity (approximate)	
Metric Measure	12 L
US Measure	3-1/8 gal
Imperial Measure	2-5/8 gal

AUTOMATIC TRANSMISSION FLUID (ATF)

- Genuine NISSAN Matic P ATF or equivalent.
- NISSAN recommends using Genuine NISSAN Matic P ATF (or equivalent) ONLY in NISSAN automatic transmissions. Do not mix with other fluids. Using fluids that are not equivalent to Genuine NISSAN Matic P ATF may damage the automatic transmission. Damage caused by the use of fluids other than as recommended is not covered under the NISSAN's New Vehicle Limited Warranty.
- Refill to the proper level according to the instructions, see "Automatic Transmission Fluid (ATF)" (P. 442).

TRANSFER FLUID

- Genuine NISSAN ATF D3M or equivalent.
- Using fluid other than Genuine NISSAN ATF D3M may cause deterioration in driveability and transfer durability, and may damage the transfer. Damage caused by fluids other than as recommended is not covered by the NISSAN's New Vehicle Limited Warranty.

Capacity (approximate)	
Metric Measure	1.5 L
US Measure	1-5/8 qt
Imperial Mesure	1-3/8 qt

FRONT FINAL DRIVE OIL

- Genuine NISSAN Differential Oil Hypoid Super GL-5 80W-90 or equivalent conventional (non-synthetic) oil.
- NISSAN recommends using Genuine NISSAN Differential Oil Hypoid Super GL-5 80W-90 ONLY in NISSAN final drive. Do not mix with other fluids. Using fluids that are not equivalent to Genuine NISSAN Differential Oil Hypoid Super GL-5 80W-90 may damage the final drive. Damage caused by the use of fluids other than as recommended is not covered by the NISSAN's New Vehicle Limited Warranty.

Capacity (approximate)	
Metric Measure	0.85 L
US Measure	1-3/4 qt
Imperial Mesure	1-1/2 qt

REAR FINAL DRIVE OIL

- Genuine NISSAN Differential Oil Hypoid Super-CS GL-5 75W-90 or equivalent.
- NISSAN recommends using Genuine NISSAN Differential Oil Hypoid Super-CS GL-5 75W-90 ONLY in NISSAN final drive. Do not mix with other fluids. Using fluids that are not equivalent to Genuine NISSAN Differential Oil Hypoid Super-CS GL-5 75W-90 may damage the final drive. Damage caused by the use of fluids other than as recommended is not covered by the NISSAN's New Vehicle Limited Warranty.

Capacity (approximate)	
Metric Measure	2.01 L
US Measure	4-1/4 qt
Imperial Mesure	3-1/2 qt

POWER STEERING FLUID (PSF)

- Genuine NISSAN PSF-II or equivalent.
- Use of a power steering fluid other than Genuine NISSAN PSF-II may prevent the power steering system from operating properly.
- Refill to the proper level according to the instructions, see "Power Steering Fluid (PSF)" (P. 442).

BRAKE FLUID

- Genuine NISSAN Super Heavy Duty Brake Fluid*2 or equivalent DOT 3.
- *2: Available in mainland U.S.A. through a NISSAN dealer.

MULTI-PURPOSE GREASE

- NLGI No. 2 (Lithium Soap base)

AIR CONDITIONING SYSTEM REFRIGERANT

- HFO-1234yf (R-1234yf)
- For additional information, see "Air conditioner system refrigerant and oil recommendations" (P. 507).

AIR CONDITIONING SYSTEM OIL

- Genuine NISSAN A/C System Oil Type ND-OIL12 (PAG) or equivalent.
- For additional information, see "Air conditioner system refrigerant and oil recommendations" (P. 507).

WINDSHIELD-WASHER FLUID

- Genuine NISSAN Windshield Washer Concentrate Cleaner & Antifreeze or equivalent.

Capacity (approximate)	
Metric Measure	4.3 L
US Measure	1-1/4 gal
Imperial Mesure	1 gal

FUEL RECOMMENDATION

Basic information

Use unleaded regular gasoline with an octane rating of at least 87 AKI (Anti-Knock Index) number (Research octane number 91).

⚠ CAUTION

- **Only vehicles with the E-85 filler door label can operate on E-85. Fuel system or other damage can occur if E-85 is used in vehicles that are not designed to run on E-85.**
- **Using a fuel other than that specified could adversely affect the emission control system, and may also affect the warranty coverage.**
- **Under no circumstances should a leaded gasoline be used, because this will damage the three-way catalyst.**
- **Do not use a fuel containing more than 15% ethanol in your vehicle. Your vehicle is not designed to run on a fuel containing more than 15% ethanol. Using a fuel containing more than 15% ethanol in a vehicle not specifically designed for a fuel containing more than 15% ethanol can adversely affect the emission control devices and systems of the vehicle. Damage caused by such fuel is not covered by the NISSAN New Vehicle Limited Warranty.**
- **Do not use fuel that contains the octane booster methylcyclopentadienyl manganese tricarbonyl (MMT). Using fuel containing MMT may adversely affect vehicle performance and vehicle emissions. Not all fuel dispensers are labeled to indicate MMT content, so you may have to consult your gasoline retailer for more details. Note that Federal and California laws prohibit the use of MMT in reformulated gasoline.**
- **U.S. government regulations require ethanol dispensing pumps to be identified by a small, square, orange and black label with the common abbreviation or the appropriate percentage for that region.**

Gasoline specifications

NISSAN recommends using gasoline that meets the World-Wide Fuel Charter (WWFC) specifications where it is available. Many of the automobile manufacturers developed this specification to improve emission control system and vehicle performance. Ask your service station manager if the gasoline meets the WWFC specifications.

Reformulated gasoline

Some fuel suppliers are now producing reformulated gasolines. These gasolines are specially designed to reduce vehicle emissions. NISSAN supports efforts towards cleaner air and suggests that you use reformulated gasoline when available.

Gasoline containing oxygenates

Some fuel suppliers sell gasoline containing oxygenates such as ethanol, Methyl Tert-butyl Ether (MTBE) and methanol with or without advertising their presence. NISSAN does not recommend the use of fuels of which the oxygenate content and the fuel compatibility for your NISSAN cannot be readily determined. If in doubt, ask your service station manager.

If you use oxygenate-blend gasoline, please take the following precautions as the usage of such fuels may cause vehicle performance problems and/or fuel system damage.

- **The fuel should be unleaded and have an octane rating no lower than that recommended for unleaded gasoline.**
- **If an oxygenate-blend other than methanol blend is used, it should contain no more than 15% oxygenate.**
- **If a methanol blend is used, it should contain no more than 5% methanol (methyl alcohol, wood alcohol). It should also contain a suitable amount of appropriate cosolvents and corrosion inhibitors. If not properly formulated with appropriate cosolvents and corrosion inhibitors, such methanol blends may cause fuel system damage and/or vehicle performance problems. At this time, sufficient data is not available to ensure that all methanol blends are suitable for use in NISSAN vehicles.**

If any driveability problems such as engine stalling and difficult hot-starting are experienced after using oxygenate-blend fuels, immediately change to a non-oxygenate fuel or a fuel with a low blend of MTBE.

Take care not to spill gasoline during refueling. Gasoline containing oxygenates can cause paint damage.

E–15 fuel

E-15 fuel is a mixture of approximately 15% fuel ethanol and 85% unleaded gasoline. E-15 can only be used in vehicles designed to run on E-15 fuel. U.S. government regulations require fuel ethanol dispensing pumps to be identified with small, square, orange and black label with the common abbreviation or the appropriate percentage for that region.

E–85 fuel

E-85 fuel is a mixture of approximately 85% fuel ethanol and 15% unleaded gasoline. E-85 can only be used in a Flexible Fuel Vehicle (FFV). Do not use E-85 in your vehicle. U.S. government regulations require fuel ethanol dispensing pumps to be identified by a small, square, orange and black label with the common abbreviation or the appropriate percentage for that region.

Fuel containing MMT

MMT, or methylcyclopentadienyl manganese tricarbonyl, is an octane boosting additive. NISSAN does not recommend the use of fuel containing MMT. Such fuel may adversely affect vehicle performance, including the emissions control system. Note that while some fuel pumps label MMT content, not all do, so you may have to consult your gasoline retailer for more details.

Aftermarket fuel additives

NISSAN does not recommend the use of any aftermarket fuel additives (for example, fuel injector cleaner, octane booster, intake valve deposit removers, etc.) which are sold commercially. Many of these additives intended for gum, varnish or deposit removal may contain active solvents or similar ingredients that can be harmful to the fuel system and engine.

Octane rating tips

Using unleaded gasoline with an octane rating lower than recommended can cause persistent, heavy "spark knock." ("Spark knock" is a metallic rapping noise.) If severe, this can lead to engine damage. If you detect a persistent heavy spark knock even when using gasoline of the stated octane rating, or if you hear steady spark knock while holding a steady speed on level roads, it is recommended that you have a NISSAN dealer correct the condition. Failure to correct the condition is misuse of the vehicle, for which NISSAN is not responsible.

Incorrect ignition timing may result in spark knock, after-run and/or overheating, which may cause excessive fuel consumption or engine damage. If any of the above symptoms are encountered, have your vehicle checked. It is recommended that you visit a NISSAN dealer for servicing.

However, now and then you may notice light spark knock for a short time while accelerating or driving up hills. This is not a cause for concern, because you get the greatest fuel benefit when there is light spark knock for a short time under heavy engine load.

API certification mark

API service symbol

LTI2587

ENGINE OIL AND OIL FILTER RECOMMENDATIONS

Selecting the correct oil

It is essential to choose the correct grade, quality and viscosity engine oil to ensure satisfactory engine life and performance. For additional information, see "Recommended fluids/lubricants and capacities" (P. 501). NISSAN recommends the use of an energy conserving oil in order to improve fuel economy.

Select only engine oils that meet the American Petroleum Institute (API) certification or International Lubricant Standardization and Approval Committee (ILSAC) certification and SAE viscosity standard. These oils have the API certification mark on the front of the container. Oils which do not have the specified quality label should not be used as they could cause engine damage.

Oil additives

NISSAN does not recommend the use of oil additives. The use of an oil additive is not necessary when the proper oil type is used and maintenance intervals are followed.

Oil which may contain foreign matter or has been previously used should not be used.

Oil viscosity

The engine oil viscosity or thickness changes with temperature. Because of this, it is important to select the engine oil viscosity based on the temperatures at which the vehicle will be operated before the next oil change. Choosing an oil viscosity other than that recommended could cause serious engine damage.

Selecting the correct oil filter

Your new NISSAN vehicle is equipped with a high-quality Genuine NISSAN oil filter. When replacing, use a Genuine NISSAN oil filter for the reason described in "Change intervals."

Change intervals

The oil and oil filter change intervals for your engine are based on the use of the specified quality oils and filters. Using engine oil and filters that are not of the specified quality, or exceeding recommended oil and filter change intervals could reduce engine life or cause severe damage to the engine. Damage to the engine caused by improper maintenance or use of incorrect

oil and filter quality and/or viscosity is not covered by the NISSAN New Vehicle Limited Warranty.

Your engine was filled with a high-quality engine oil when it was built. You do not have to change the oil before the first recommended change interval. Oil and filter change intervals depend upon how you use your vehicle.

NISSAN recommends the use of Genuine NISSAN parts or equivalent. The use of parts that do not meet or exceed NISSAN specifications, can cause damage to your vehicle, and have an effect on your warranty coverage. It is recommended that you visit a NISSAN dealer parts department who can provide information on the proper parts for your vehicle.

Operation under the following conditions may require more frequent oil and filter changes:

- repeated short distance driving at cold outside temperatures
- driving in dusty conditions
- extensive idling
- towing a trailer
- stop and go commuting

For additional information, see the "Maintenance and schedules" section of this manual.

AIR CONDITIONER SYSTEM REFRIGERANT AND OIL RECOMMENDATIONS

The air conditioner system in your NISSAN vehicle must be charged with the refrigerant HFO-1234yf (R-1234yf) and NISSAN A/C system oil Type ND-OIL12 (PAG) or the exact equivalents.

⚠ CAUTION

The use of any other refrigerant or oil will cause severe damage to the air conditioning system and will require the replacement of all air conditioner system components.

The refrigerant HFO-1234yf (R-1234yf) in your NISSAN vehicle does not harm the earth's ozone layer. Although this refrigerant does not affect the earth's atmosphere, certain government regulations require the recovery and recycling of any refrigerant during automotive air conditioner system service. Air conditioner system should only be serviced by trained and certified technicians to ensure proper and safe operation (SAE J2845). A NISSAN dealer has the trained technicians and equipment needed to recover and recycle your air conditioner system refrigerant. Only new and SAEJ2842 certified evaporator(s) shall be used as replacement parts.

A damaged or leaking air conditioning evaporator shall never be repaired or replaced with one removed from a used or salvaged vehicle. To replace a damaged or leaking evaporator, use only new and SAE J2842 certified evaporator(s). It is recommended that you visit a NISSAN dealer when servicing your air conditioner system.

ENGINE

Model		**3.8L 6 cylinder (VQ38DD engine model)**
Type		Gasoline, 4-cycle, DOHC
Cylinder arrangement		6-cylinder, V-block, Slanted at 60°
Bore x Stroke	Metric measure	95.5 mm x 88.4 mm
	US measure	3.760 in x 3.480 in
Displacement	Metric measure	3,799 cm^3
	US measure	231.8 cu in
Firing order		1–2–3–4–5–6
Idle speed A/T in N (Neutral) position Ignition timing (degree B.T.D.C. at idle speed) CO % at idle	Refer to the "Emission control information label" on the underside of the hood.	
Spark plug		FXE22HR-11
Spark plug gap (Nominal)	Metric measure	1.1 mm
	US measure	0.043 in
Camshaft operation		Timing chain

This spark ignition system complies with the Canadian standard ICES-002.

WHEELS AND TIRES

Wheels/size	Offset Metric Measure	Offset US Measure
Steel		
16 x 7JJ	30 mm	1.18 in
Aluminum		
16 x 7J	30 mm	1.18 in
17 x 7.5J	30 mm	1.18 in
Tires	**Size**	
	P265/70R16	
	265/65R17	
	265/70R17	
Spare tire	**Size**	
Steel 16”	Full size	
Steel 16”	P265/70R16	
Steel 17”	Full size	

DIMENSIONS AND WEIGHTS

Overall length		
Short wheel base	Metric measure	5,338.1 mm
	US measure	210.2 in
Long wheel base	Metric measure	5,692.1 mm
	US measure	224.1 in
Overall width		
without mirrors	Metric measure	1,853.5 mm
	US measure	73.0 in
without mirrors (with over fenders)	Metric measure	1,896.5 mm
	US measure	74.7 in
with mirrors	Metric measure	2,135.3 mm
	US measure	84.1 in

	2WD	4WD
Overall height		
Crew Cab models		
S with Short wheel base		
Metric measure	1,823.5 mm	1,838.4 mm
US measure	71.8 in	72.4 in
SV with Short wheel base		
Metric measure	1,814.7 mm	1,829.6 mm
US measure	71.4 in	72.0 in
SV with Convenience package and SL Short wheel base		
Metric measure	1,814.7 mm	1,829.6 mm
US measure	71.4 in	72.0 in
PRO-X and PRO-4X with Short wheel base		
Metric measure	1,837 mm	1,852.6 mm
US measure	72.3 in	72.9 in
SV with Long wheel base		
Metric measure	1,809.8 mm	1,825.7 mm
US measure	71.3 in	71.9 in

	2WD	4WD
SV with Convenience package and SL Long wheel base		
Metric measure	1,809.8 mm	1,825.7 mm
US measure	71.3 in	71.9 in
PRO-4X with Long wheel base		
Metric measure		1,848.7 mm
US measure		72.8 in
King Cab® models		
S		
Metric measure	1,815.6 mm	1,831.5 mm
US measure	71.5 in	72.1 in
SV		
Metric measure	1,807.6 mm	1,823.5 mm
US measure	71.2 in	71.8 in
SV with Convenience package		
Metric measure	1,807.6 mm	1,823.5 mm
US measure	71.2 in	71.8 in
PRO-4X		
Metric measure		1,845.8 mm
US measure		72.7 in

Track width		
Front and rear	Metric measure	1,570 mm
	US measure	61.8 in
Wheelbase		
Short wheel base	Metric measure	3,200 mm
	US measure	126.0 in
Long wheel base	Metric measure	3,550 mm
	US measure	139.8 in

Gross vehicle weight rating	Refer to the "F.M.V.S.S./ C.M.V.S.S. certification label" in this section.
Gross axle weight rating	
Front	
Rear	

WHEN TRAVELING OR REGISTERING IN ANOTHER COUNTRY

When planning to drive your NISSAN vehicle in another country, you should first find out if the fuel available is suitable for your vehicle's engine.

Using fuel with an octane rating that is too low may cause engine damage. All gasoline vehicles must be operated with unleaded gasoline. Therefore, avoid taking your vehicle to areas where appropriate fuel is not available.

When transferring the registration of your vehicle to another country, state, province or district, it may be necessary to modify the vehicle to meet local laws and regulations.

The laws and regulations for motor vehicle emission control and safety standards vary according to the country, state, province or district; therefore, vehicle specifications may differ.

When any vehicle is to be taken into another country, state, province or district and registered, its modifications, transportation and registration are the responsibility of the user. NISSAN is not responsible for any inconvenience that may result.

VEHICLE IDENTIFICATION

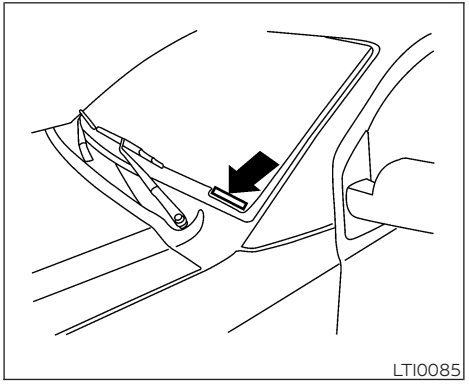

VEHICLE IDENTIFICATION NUMBER (VIN) PLATE

The VIN plate is attached as shown. This number is the identification for your vehicle and is used in the vehicle registration.

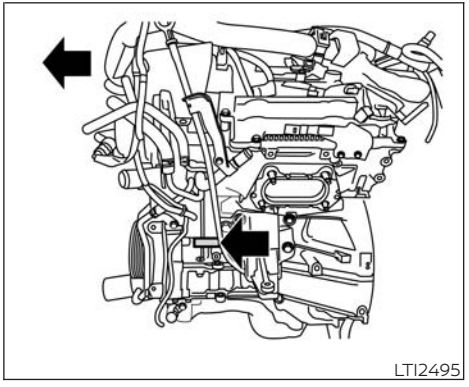

3.8L 6 cylinder (VQ38DD engine model)

ENGINE SERIAL NUMBER

The number is stamped on the engine as shown.

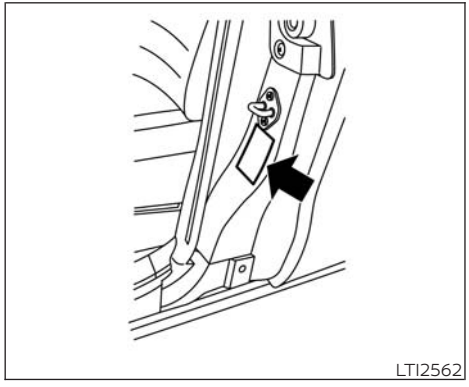

Type A (if so equipped)

F.M.V.S.S./C.M.V.S.S. CERTIFICATION LABEL

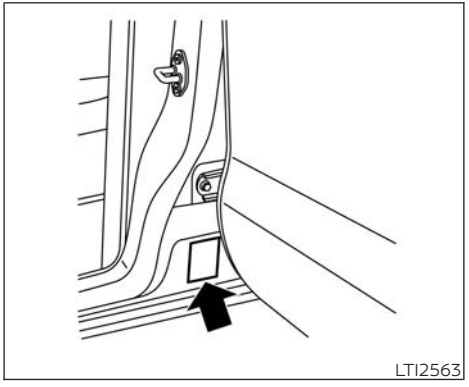

Type B (if so equipped)

The Federal/Canadian Motor Vehicle Safety Standard (F.M.V.S.S./C.M.V.S.S.) certification label is affixed as shown. This label contains valuable vehicle information, such as: (GVWR), (GAWR), month and year of manufacture, (VIN), etc. Review it carefully.

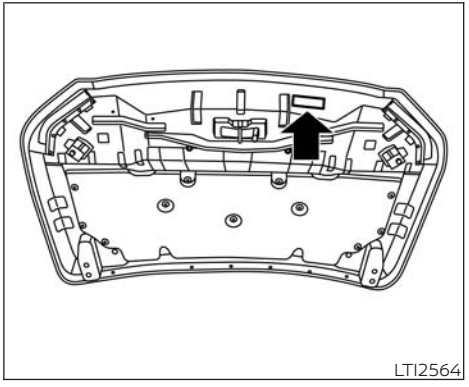

EMISSION CONTROL INFORMATION LABEL

The emission control information label is attached to the underside of the hood as shown.

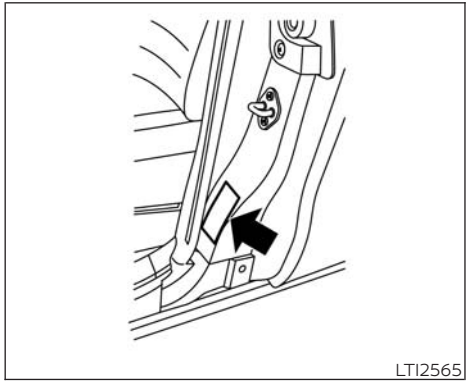

Type A (if so equipped)

TIRE AND LOADING INFORMATION LABEL

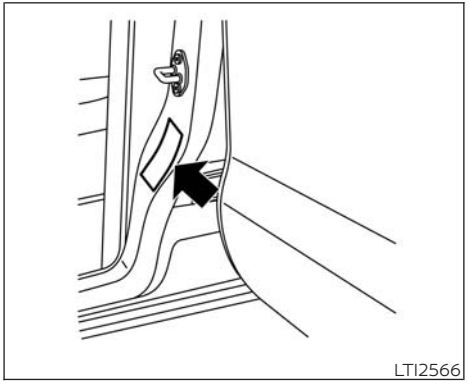

Type B (if so equipped)

The cold tire pressure is shown on the Tire and Loading Information label. The label is located as shown.

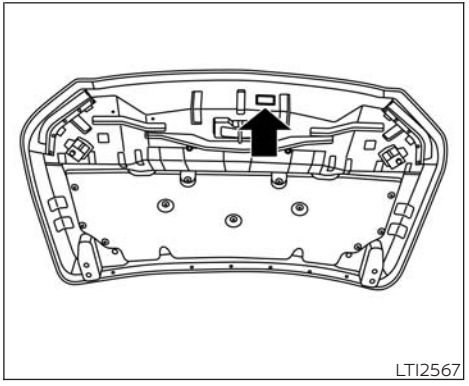

AIR CONDITIONER SPECIFICATION LABEL

The air conditioner specification label is affixed to the underside of the hood as shown.

Symbol Name	Reference	Graphic
Caution	ISO 7000 0434	
Air Conditioning System (MAC)	ISO 2575 D01	
MAC System Lubricant Type (PAG–POE)		
Requires Registered Technician to Service MAC System		
Flammable Refrigerant		

Air Conditioner Specification Label Symbols

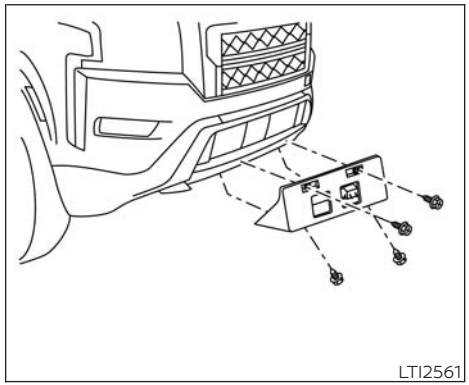

Use the following steps to mount the front license plate:

1. Place the license plate bracket against the lower plastic finisher. The bracket will align with the pre-molded indents found on the lower plastic finisher. Install the license plate holder using the four self tapping screws provided.
2. Mount the license plate **using two M6-14 mm bolts.**

   License plate bolt tightening torque:
   3.8 - 4.7 ft-lbs. (5.10 - 6.37 N·m)

BASIC INFORMATION

⚠WARNING

- **Never allow anyone to ride in the cargo area or on the rear seats when they are in the fold-down position. In a collision, people riding in these areas without proper restraints are more likely to be seriously injured or killed.**
- **It is extremely dangerous to ride in a cargo area inside a vehicle. In a collision, people riding in these areas are more likely to be seriously injured or killed.**
- **Do not allow people to ride in any area of your vehicle that is not equipped with seats and seat belts.**
- **Be sure everyone in your vehicle is in a seat and using a seat belt properly.**

TERMS

It is important to familiarize yourself with the following terms before loading your vehicle:

- Curb Weight (actual weight of your vehicle) - vehicle weight including: standard and optional equipment, fluids, emergency tools, and spare tire assembly. This weight **does not** include passengers and cargo.
- GVW (Gross Vehicle Weight) - curb weight plus the combined weight of passengers and cargo.
- GVWR (Gross Vehicle Weight Rating) - maximum total combined weight of the unloaded vehicle, passengers, cargo, hitch, trailer tongue load and any other optional equipment. This information is located on the F.M.V.S.S./C.M.V.S.S. certification label.
- GAWR (Gross Axle Weight Rating) - maximum weight (load) limit specified for the front or rear axle. This information is located on the F.M.V.S.S./C.M.V.S.S. certification label.
- GCWR (Gross Combined Weight Rating) - The maximum total weight rating of the vehicle, passengers, cargo, and trailer.
- Vehicle Capacity Weight, Load limit, Total load capacity - maximum total weight limit specified of the load (passengers and cargo) for the vehicle. This is the maximum combined weight of occupants and cargo that can be loaded into the vehicle. If the vehicle is used to tow a trailer, the trailer tongue weight must be included as part of the cargo load. This information is located on the Tire and Loading Information label.

- Cargo capacity - permissible weight of cargo, the subtracted weight of occupants from the load limit.

VEHICLE LOAD CAPACITY

Basic information

Before driving a loaded vehicle, confirm that you do not exceed the Gross Vehicle Weight Rating (GVWR) or the Gross Axle Weight Rating (GAWR) for your vehicle. Both the GVWR and GAWR are located on the F.M.V.S.S./C.M.V.S.S. certification label. For additional information, see "Measurement of weights" (P. 524).

Do not exceed the load limit of your vehicle shown as "The combined weight of occupants and cargo" on the Tire and Loading Information label. Do not exceed the number of occupants shown as "Seating Capacity" on the Tire and Loading Information label.

To get "the combined weight of occupants and cargo", add the weight of all occupants, then add the total cargo weight. Examples are shown in the following illustration.

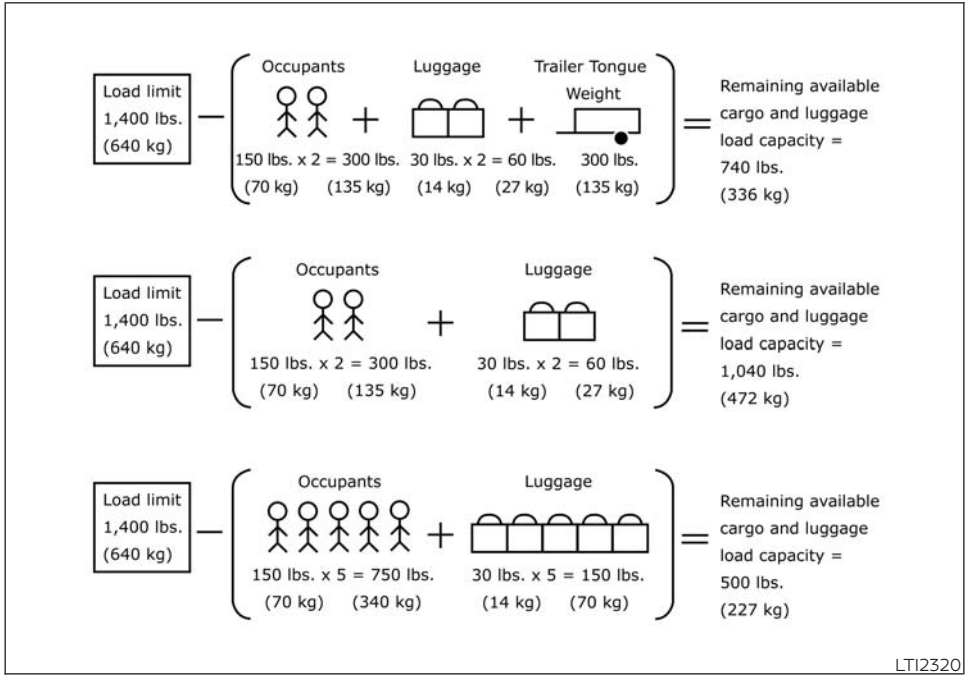

Example

Steps For Determining Correct Load Limit

1. Locate the statement "The combined weight of occupants and cargo should never exceed XXX kg or XXX lbs." on your vehicle's placard.
2. Determine the combined weight of the driver and passengers that will be riding in your vehicle.
3. Subtract the combined weight of the driver and passengers from XXX kg. or XXX lbs.
4. The resulting figure equals the available amount of cargo and luggage load capacity. For example, if the "XXX" amount equals 1400 lbs. and there will be five 150 lb. passengers in your vehicle, the amount of available cargo and luggage load capacity is 650 lbs. (1400-750 (5 X 150) = 650 lbs.)

5. Determine the combined weight of luggage and cargo being loaded on the vehicle. That weight may not safely exceed the available cargo and luggage load capacity calculated in step 4.
6. If your vehicle will be towing a trailer, load from your trailer will be transferred to your vehicle. Consult this manual to determine how this reduces the available cargo and luggage load capacity of your vehicle.

Before driving a loaded vehicle, confirm that you do not exceed the GVWR or the GAWR for your vehicle. For additional information, see "Measurement of weights" (P. 524).

Also check tires for proper inflation pressures. For additional information, see "Tire and Loading Information label" (P. 463).

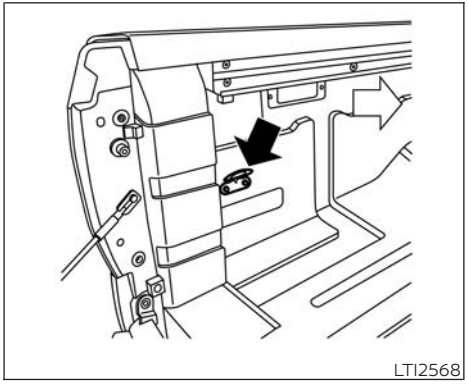

SECURING THE LOAD

For your convenience, tie down hooks (if so equipped) are placed at each corner of the truck box. These may be used to help secure cargo loaded into the truck box.

⚠WARNING

- **Properly secure all cargo with ropes or straps to help prevent it from sliding or shifting. Do not place cargo higher than the seatbacks. In a sudden stop or collision, unsecured cargo could cause personal injury.**
- **Do not load your vehicle any heavier than the GVWR or the maximum front and rear GAWRs. If you do, parts of your vehicle can break, tire damage could occur, or it can change the way your vehicle handles. This could result in loss of control and cause personal injury.**

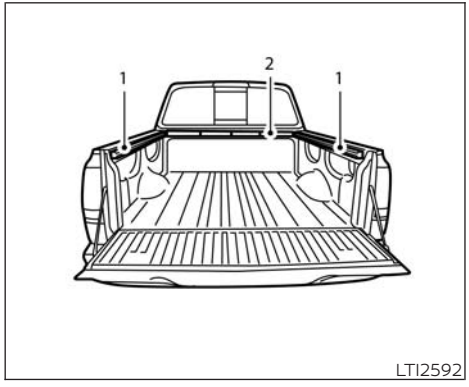

UTILI-TRACK® CHANNEL SYSTEM (if so equipped)

1. Side channels
2. Header channel

⚠ WARNING

- **Properly install and tighten the tie-down cleats into the Utili-track® channel system. Also, do not attach any rope or straps directly to the channel. Failure to properly install the tie-down cleats or attaching ropes or straps directly to the channel can cause the cargo to become unsecured. In a sudden stop or collision, unsecured cargo could cause personal injury.**
- **Properly secure all cargo with ropes or straps to help prevent it from sliding or shifting. In a sudden stop or collision, unsecured cargo could cause personal injury.**

The Utili-track® channel system allows you to move tie-down clamps in the bed to the best location to secure a load.

The tie-down cleats must be installed so the clamp is properly seated in the notches in the rail. If the tie-down cleat is not seated in the notches, it will not be flush with the rail and cannot be properly tightened. The bolt in the center of the cleat must be tightened hand tight 20 – 40 in-lbs. (2.27 - 4.6 N·m).

Check the tightness of the tie-down cleat periodically during a trip to make sure the center bolt has not become loose.

Install the tie-down cleat as follows:

1. Remove the side channels by sliding them out the back of the truck bed. Properly store the side channels.
2. Loosen the center bolt completely.

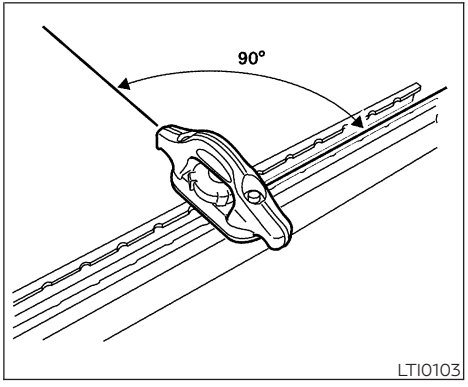

3. Insert the cleat into the channel perpendicular to the channel as shown. Then rotate the cleat clockwise 90° and slide it to the desired location.

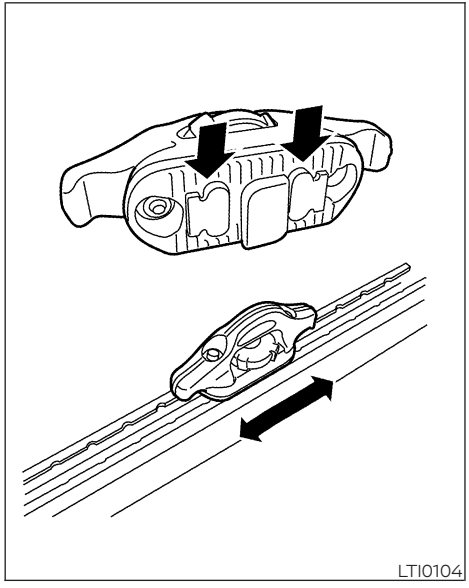

4. Position the cleat so the nubs on the bottom fully seat into the channel detents.

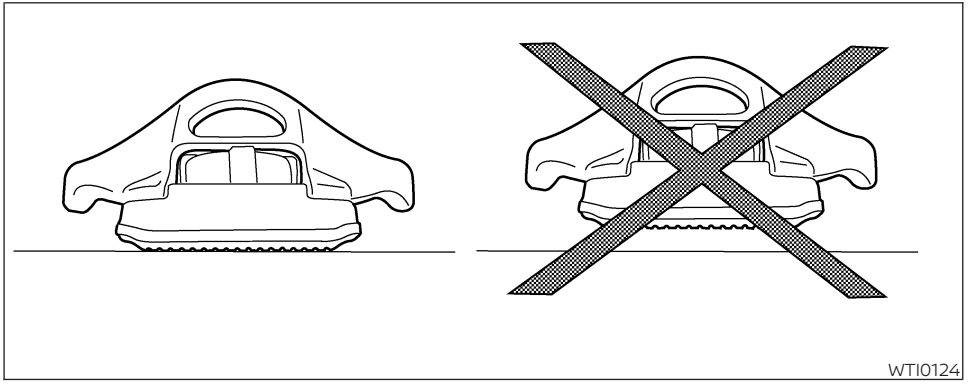

5. There should be no gap between the bottom of the cleat and the top of the channel. Tighten the center bolt hand tight 20-40 in-lbs. (2.27 - 4.6 N·m).

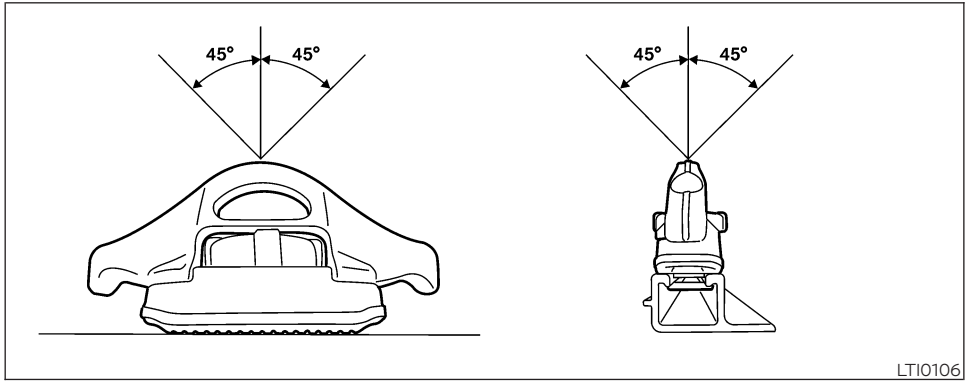

⚠ CAUTION

- **Install only one cleat per section of channel.**
- **Applying loads at angles to the cleats greater than 45° or loads greater than 150 lbs. (204 N·m). (header and floor channels) or 200 lbs. (271 N·m). (side channels) may cause damage to the channel or bed.**

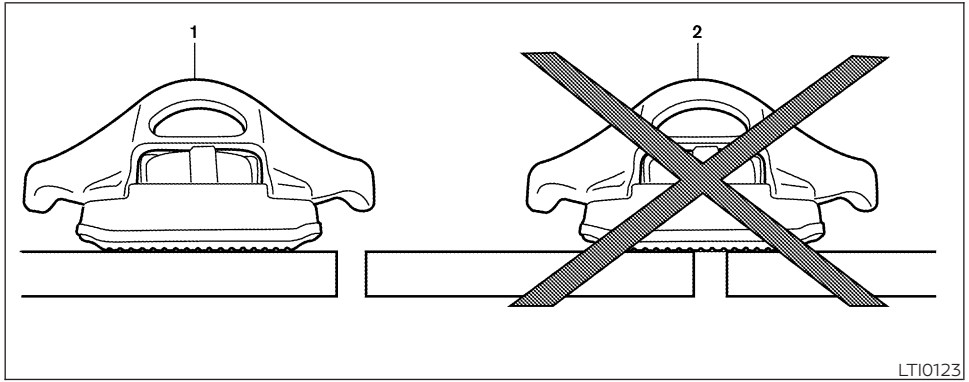

1 correct installation, 2 incorrect installation

⚠ WARNING

Do not install accessories over the gap between the front and rear side channels. Doing this could affect the rear structure in certain rear impacts, which could result in serious injury.

LOADING TIPS

- The GVW must not exceed GVWR or GAWR as specified on the F.M.V.S.S./C.M.V.S.S. certification label.
- Do not load the front and rear axle to the GAWR. Doing so will exceed the GVWR.

⚠ WARNING

- **Properly secure all cargo with ropes or straps to help prevent it from sliding or shifting. Do not place cargo higher than the seatbacks. In a sudden stop or collision, unsecured cargo could cause personal injury.**
- **Do not load your vehicle any heavier than the GVWR or the maximum front and rear GAWRs. If you do, parts of your vehicle can break, tire damage could occur, or it can change the way your vehicle handles.**

This could result in loss of control and cause personal injury.

- **Overloading not only can shorten the life of your vehicle and the tire, but can also cause unsafe vehicle handling and longer braking distances. This may cause a premature tire failure which could result in a serious accident and personal injury. Failures caused by overloading are not covered by the vehicle's warranty.**

MEASUREMENT OF WEIGHTS

Secure loose items to prevent weight shifts that could affect the balance of your vehicle. When the vehicle is loaded, drive to a scale and weigh the front and the rear wheels separately to determine axle loads. Individual axle loads should not exceed either of the Gross Axle Weight Ratings (GAWR). The total of the axle loads should not exceed the Gross Vehicle Weight Rating (GVWR). These ratings are given on the vehicle certification label. If weight ratings are exceeded, move or remove items to bring all weights below the ratings.

BASIC INFORMATION

Do not use a slide-in camper with your vehicle.

SPECIAL BODY VEHICLES

Some vehicles are equipped with commercial or camper bodies. However, this Owner's Manual does not cover these options. For additional information, refer to the body manufacturer's instruction manual.

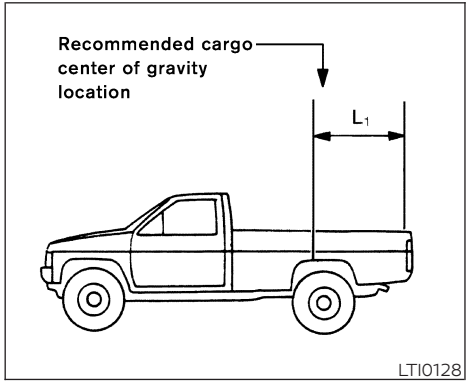

LOCATION FOR CENTER OF GRAVITY

The illustration indicates the recommended cargo center of gravity location.

King Cab®:

Short wheel base models without bedliner/tailgate liner,

L1 = 41.1 in (1,045 mm)

Short wheel base models with bed liner/tailgate liner (SV/PRO-4X with comfort and convenience package),

L1 = 40.5 in (1,028 mm)

Crew Cab:

Short wheel base models without bedliner/tailgate liner,

L1 = 41.1 in (1,045 mm)

Short wheel base models with bedliner/tailgate liner (SV/PRO-4X with comfort and convenience package),

L1 = 40.5 in (1,028 mm)

Long wheel base models,

L1 = 40.6 in (1,032 mm)

⚠WARNING

- **Improper loading may be dangerous. If a load is too far back, it can affect handling characteristics. If a load is too far forward, the front axle may be overloaded.**
- **Overloading or improper loading can adversely affect vehicle handling, braking and performance and may lead to accidents.**

VEHICLE LOAD WEIGHT CAPACITY

The vehicle payload weight capacity shown on the Tire and Loading Information label indicates the maximum total weight of passengers, optional equipment (air conditioning, trailer hitch, etc.) and cargo that your vehicle is designed to carry.

For additional information, see "Tire and Loading Information label" (P. 463).

Before driving a loaded vehicle, confirm that you do not exceed the GVWR or the GAWR for your vehicle. For additional information, see "Vehicle loading information" (P. 516).

Also check tires for proper inflation pressures. For additional information, see "Tire and Loading Information label" (P. 463).

BASIC INFORMATION

⚠ WARNING

- **Overloading or improper loading of a trailer and its cargo can adversely affect vehicle handling, braking and performance and may lead to accidents.**
- **Do not tow a trailer when the TEMPORARY FULL SIZE spare tire is installed.**
- **If you have a crew cab SV Long wheel base model do not remove or replace the trailer hitch. Removing or replacing the hitch from the vehicle:**
  - **Creates a risk of a thermal event and serious injury or death in a crash.**
  - **Makes the vehicle non-compliant with applicable Federal Motor Vehicle Safety Standards.**

⚠ CAUTION

- **Do not tow a trailer or haul a heavy load for the first 500 mile (805 km). Your engine, axle or other parts could be damaged.**
- **For the first 500 miles (805 km) that you tow a trailer, do not drive over 50 mph (80 km/h) and do not make starts at full throttle. This helps the engine and other parts of your vehicle wear in at the heavier loads.**

Your new vehicle was designed to be used primarily to carry passengers and cargo. Remember that towing a trailer places additional loads on your vehicle's engine, drive train, steering, braking and other systems.

A NISSAN Towing Guide (U.S. only) is available on the website at www.nissanusa.com. This guide includes information on trailer towing capability and the special equipment required for proper towing.

MAXIMUM LOAD LIMITS

Maximum trailer loads

Never allow the total trailer load to exceed the value specified in the "Towing Load/ Specification" chart found in this section. The total trailer load equals trailer weight plus its cargo weight.

- **When towing a trailer load of 3,500 lbs. (1,587 kg) or more, trailers with a brake system MUST be used.**

The maximum Gross Combined Weight Rating (GCWR) should not exceed the value specified in the following "Towing Load/ Specification" chart.

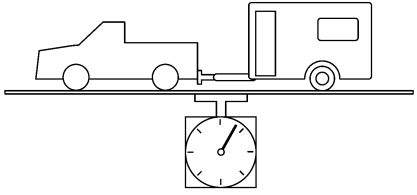

LTI0161

The GCWR equals the combined weight of the towing vehicle (including passengers and cargo) plus the total trailer load. Towing loads greater than these or using improper towing equipment could adversely affect vehicle handling, braking and performance.

The ability of your vehicle to tow a trailer is not only related to the maximum trailer loads, but also the places you plan to tow. Tow weights appropriate for level highway driving may have to be reduced for low traction situations (for example, on slippery boat ramps).

Temperature conditions can also affect towing. For example, towing a heavy trailer in high outside temperatures on graded roads can affect engine performance and cause overheating. The engine protection mode, which helps reduce the chance of engine damage, could activate and automatically decrease engine power. Vehicle speed may decrease under high load. Plan your trip carefully to account for trailer and vehicle load, weather and road conditions.

⚠ WARNING

Overheating can result in reduced engine power and vehicle speed. The reduced speed may be lower than other traffic, which could increase the chance of a collision. Be especially careful when driving. If the vehicle cannot maintain a safe driving speed, pull to the side of the road in a safe area. Allow the engine to cool and return to normal operation. For additional information, see "If your vehicle overheats" (P. 417).

⚠ CAUTION

Vehicle damage resulting from improper towing procedures is not covered by NISSAN warranties.

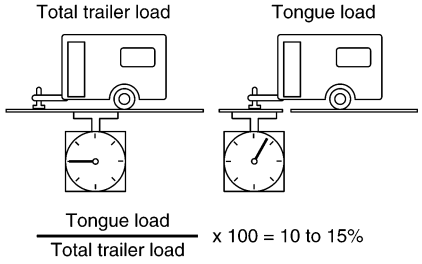

WTI0160

Tongue load

When using a weight carrying or a weight distributing hitch, keep the tongue load between 10 - 15% of the total trailer load or use the trailer tongue load specified by the trailer manufacturer. The tongue load must be within the maximum tongue load limits shown in the following "Towing Load/ Specification" chart. If the tongue load becomes excessive, rearrange cargo to allow for proper tongue load.

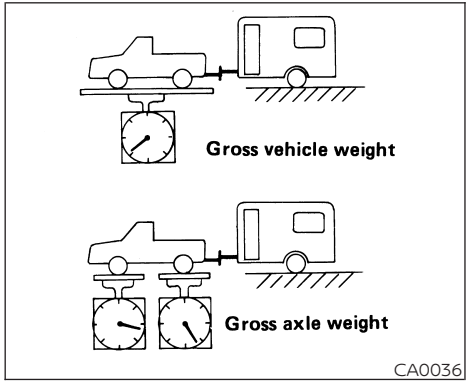

Maximum Gross Vehicle Weight (GVW)/maximum Gross Axle Weight (GAW)

The GVW of the towing vehicle must not exceed the Gross Vehicle Weight Rating (GVWR) shown on the F.M.V.S.S./C.M.V.S.S. certification label. The GVW equals the combined weight of the unloaded vehicle, passengers, luggage, hitch, trailer tongue load and any other optional equipment. In addition, front or rear GAW must not exceed the Gross Axle Weight Rating (GAWR) shown on the F.M.V.S.S./C.M.V.S.S. certification label.

Towing capacities are calculated assuming a base vehicle with driver and any options required to achieve the rating. Additional passengers, cargo and/or optional equipment, such as the trailer hitch, will add weight to the vehicle and reduce your vehicle's maximum towing capacity and trailer tongue load.

The vehicle and trailer need to be weighed to confirm the vehicle is within the GVWR, Front GAWR, Rear GAWR, Gross Combined Weight Rating (GCWR) and Towing capacity.

All vehicle and trailer weights can be measured using platform type scales commonly found at truck stops, highway weigh stations, building supply centers or salvage yards.

To determine the available payload capacity for tongue load, use the following procedure.

1. Locate the GVWR on the F.M.V.S.S./C.M.V.S.S. certification label.
2. Weigh your vehicle on the scale with all of the passengers and cargo that are normally in the vehicle when towing a trailer.
3. Subtract the actual vehicle weight from the GVWR. The remaining amount is the available maximum tongue load.

To determine the available towing capacity, use the following procedure.

1. Find the GCWR for your vehicle on the "Towing Load/Specification" chart found in this section.
2. Subtract the actual vehicle weight from the GCWR. The remaining amount is the available maximum towing capacity.

To determine the Gross Trailer Weight, weigh your trailer on a scale with all equipment and cargo, that are normally in the trailer when it is towed. Make sure the Gross Trailer Weight is not more than the Gross Trailer Weight Rating shown on the trailer and is not more than the calculated available maximum towing capacity.

Also weigh the front and rear axles on the scale to make sure the Front Gross Axle Weight and Rear Gross Axle Weight are not more than Front Gross Axle Weight and Rear Gross Axle Weight on the F.M.V.S.S./C.M.V.S.S. certification label. The cargo in the trailer and vehicle may need to be moved or removed to meet the specified ratings.

Example:

- Gross Vehicle Weight (GVW) as weighed on a scale- including passengers, cargo and hitch - 5,185 lbs. (2352 kg).
- Gross Vehicle Weight Rating (GVWR) from F.M.V.S.S./C.M.V.S.S. certification label - 5,815 lbs. (2638 kg).
- Gross Combined Weight Rating (GCWR) from "Towing Load/Specification" chart - 11,133 lbs. (5050 kg).
- Maximum Trailer towing capacity from "Towing Load/Specification" chart - 6,100 lbs. (2767 kg).

5,815 lbs. (2638 kg)	GVWR
-5,185 lbs. (2352 kg)	GVW
= 630 lbs. (286 kg)	Available for tongue weight
11,133 lbs. (5050 kg)	GCWR
-5,185 lbs. (2352 kg)	GVW
= 5,948 lbs. (2698 kg)	Capacity available for towing
630 lbs. (286 kg)	Available tongue weight
/ 5,948 lbs. (2698 kg)	Available capacity
=	10 % tongue weight

LTI2778

The available towing capacity may be less than the maximum towing capacity due to the passenger and cargo load in the vehicle.

Remember to keep trailer tongue weight between 10 - 15 percent of the trailer weight or within the trailer tongue load specification recommended by the trailer manufacturer. If the tongue load becomes excessive, rearrange the cargo to obtain the proper tongue load. Do not exceed the maximum tongue weight specification shown in the "Towing Load/Specification" chart even if the calculated available tongue weight is greater than 15 percent. If the calculated tongue weight is less than 10 percent, reduce the total trailer weight to match the available tongue weight.

Always verify that available capacities are within the required ratings.

TOWING LOAD/SPECIFICATION

⚠ WARNING

The towing capacities provided in this manual are for general reference only. The safe towing capacity of your vehicle is affected by dealer and factory installed options and passenger and cargo loads. You must weigh the vehicle and trailer as described in this manual to determine the actual vehicle towing capacity. Do not exceed the published maximum towing capacity or the GCWR or the GVWR shown on the F.M.V.S.S./C.M.V.S.S. label. Doing so can result in an accident causing serious personal injury or property damage.

King Cab® models		
Axle type	2WD	
	Metric Measure	US Measure
Maximum Payload	735 kg	1,620 lbs.
Maximum Towing Capacity*1, *2, *3	3,243 kg	7,150 lbs.
Maximum Tongue Load*2, *3	324.3 kg	715 lbs.
Maximum Gross Combined Weight Rating	5,425 kg	11,960 lbs.
Axle type	4WD	
	Metric Measure	US Measure
Maximum Payload	658 kg	1,450 lbs.
Maximum Towing Capacity*1, *2, *3	3,175 kg	7,000 lbs.
Maximum Tongue Load*2, *3	317.5 kg	700 lbs.
Maximum Gross Combined Weight Rating	5,425 kg	11,960 lbs.

Crew Cab – Short wheel base models		
Axle type	2WD	
	Metric Measure	US Measure
Maximum Payload	676 kg	1,490 lbs.
Maximum Towing Capacity*1, *2, *3	3,206 kg	7,070 lbs.
Maximum Tongue Load*2, *3	320.6 kg	707 lbs.
Maximum Gross Combined Weight Rating	5,425 kg	11,960 lbs.
Axle type	4WD	
	Metric Measure	US Measure
Maximum Payload	603 kg	1,330 lbs.
Maximum Towing Capacity*1, *2, *3	3,157 kg	6,960 lbs.
Maximum Tongue Load*2, *3	315.7 kg	696 lbs.
Maximum Gross Combined Weight Rating	5,425 kg	11,960 lbs.

Crew Cab – Long wheel base models		
Axle type	2WD	
	Metric Measure	US Measure
Maximum Payload	635 kg	1,400 lbs.
Maximum Towing Capacity*1, *2, *3	3,139 kg	6,920 lbs.
Maximum Tongue Load*2, *3	313.9 kg	692 lbs.
Maximum Gross Combined Weight Rating	5,425 kg	11,960 lbs.
Axle type	4WD	
	Metric Measure	US Measure
Maximum Payload	544 kg	1,200 lbs.
Maximum Towing Capacity*1, *2, *3	3,066 kg	6,760 lbs.
Maximum Tongue Load*2, *3	306.6 kg	676 lbs.
Maximum Gross Combined Weight Rating	5,425 kg	11,960 lbs.

*1:
- The towing capacity is calculated using the SAE International SAE J2807 test method. Additional passengers, cargo and/or optional equipment will add weight to the vehicle and reduce your vehicle's maximum towing capacity.
- All towing above 3,500 lbs. (1,587 kg) requires the use of trailer brakes.
- NISSAN recommends the use of a tandem axle trailer whenever towing above 3,000 lbs. (1,361 kg).

*2: The maximum towing capacity when using the Genuine NISSAN step bumper as a ball mount is 3,500 lbs. (1,588 kg) and 350 lbs. (158 kg) tongue load.

*3: Use of a weight-distributing hitch system is recommended when towing over 5,000 lbs (2,368 kg).

TOWING SAFETY

Basic information

⚠ WARNING

If you have a crew cab SV Long wheel base model do not remove or replace the trailer hitch. Removing or replacing the hitch from the vehicle:

- **Creates a risk of a thermal event and serious injury or death in a crash.**
- **Makes the vehicle non-compliant with applicable Federal Motor Vehicle Safety Standards.**

Trailer hitch

For all other model vehicles, your vehicle may be equipped with an optional trailer tow package. The trailer tow package includes a receiver-type frame mounted hitch. This hitch is rated for the maximum towing capacity of this vehicle when the proper towing equipment is used. Choose a proper ball mount and hitch ball that is rated for the trailer to be towed. Genuine NISSAN ball mounts and hitch balls are available from a NISSAN dealer.

If your vehicle is not equipped with the optional trailer tow package, check the towing capacity of your bumper hitch or receiver-type frame mounted hitch. Choose a proper hitch for your vehicle and trailer. A Genuine NISSAN trailer hitch is available from a NISSAN dealer. Make sure the trailer hitch is securely attached to the vehicle to help avoid personal injury or property damage due to sway caused by crosswinds, rough road surfaces or passing trucks.

⚠ WARNING

Trailer hitch components have specific weight ratings. Your vehicle may be capable of towing a trailer heavier than the weight rating of the hitch components. Never exceed the weight rating of the hitch components. Doing so can cause serious personal injury or property damage.

Hitch ball

Choose a hitch ball of the proper size and weight rating for your trailer:

- The required hitch ball size is stamped on most trailer couplers. Most hitch balls also have the size printed on the top of the ball.
- Choose the proper class hitch ball based on the trailer weight.
- The diameter of the threaded shank of the hitch ball must be matched to the ball mount hole diameter. The hitch ball shank should be no more than 1/16" smaller than the hole in the ball mount.
- The threaded shank of the hitch ball must be long enough to be properly secured to the ball mount. There should be at least 2 threads showing beyond the lock washer and nut.

Ball mount

The hitch ball is attached to the ball mount and the ball mount is inserted into the hitch receiver. Choose a proper class ball mount based on the trailer weight. Additionally, the ball mount should be chosen to keep the trailer tongue level with the ground.

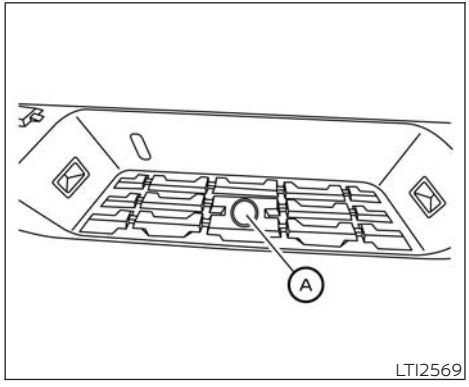

LTI2569

Bumper towing

The Genuine NISSAN step bumper has provisions to install a trailer hitch ball and is designed to tow trailers of a maximum weight of 3,500 lbs. (1,588 kg).

To install a trailer hitch ball cut out the circle in the center of the step bumper Ⓐ, then remove it to install the trailer hitch ball.

Weight carrying hitches

A weight carrying or "dead weight" ball mount is one that is designed to carry the whole amount of tongue weight and gross weight directly on the ball mount and on the receiver.

Weight distribution hitch

This type of hitch is also called a "load-leveling" or "equalizing" hitch. A set of bars attach to the ball mount and to the trailer to distribute the tongue weight (hitch weight) of your trailer. Many vehicles can't carry the full tongue weight of a given trailer, and need some of the tongue weight transferred through the frame and pushing down on the front wheels. This gives stability to the tow vehicle.

A weight-distributing hitch system (Class IV) is recommended if you plan to tow trailers with a maximum weight over 5,000 lbs. (2,268 kg). Check with the trailer and towing equipment manufacturers to determine if they recommend the use of a weight-distributing hitch system.

NOTE:

A weight-distributing hitch system may affect the operation of trailer surge brakes. If you are considering use of a weight-distributing hitch system with a surge brake-equipped trailer, check with the surge brake, hitch or trailer manufacturer to determine if and how this can be done.

Follow the instructions provided by the manufacturer for installing and using the weight-distributing hitch system.

General set-up instructions are as follows:

1. Park unloaded vehicle on a level surface. With the ignition switch in the ON position and the doors closed, allow the vehicle to stand for several minutes so that it can level.
2. Measure the height of a reference point on the front and rear bumpers at the center of the vehicle.
3. Attach the trailer to the vehicle and adjust the hitch equalizers so that the front bumper height is within 0 - .5 inches (0 – 13 mm) of the reference height measured in step 2. The rear bumper should be no higher than the reference height measured in step 2.

⚠ WARNING

Properly adjust the weight distributing hitch so the rear of the bumper is no higher than the measured reference height when the trailer is attached. If the rear bumper is higher than the measured reference height when loaded, the vehicle may handle unpredictably which could cause a loss of vehicle control and cause serious personal injury or property damage.

Sway control device

Sudden maneuvers, wind gusts, and buffeting caused by other vehicles can affect trailer handling. Sway control devices may be used to help control these affects. If you choose to use one, contact a reputable trailer hitch supplier to make sure the sway control device will work with the vehicle, hitch, trailer and the trailer's brake system. Follow the instructions provided by the manufacturer for installing and using the sway control device.

Class I hitch

Class I trailer hitch equipment (receiver, ball mount and hitch ball) can be used to tow trailers of a maximum weight of 2,000 lbs. (907 kg).

Class II hitch

Class II trailer hitch equipment (receiver, ball mount and hitch ball) can be used to tow trailers of a maximum weight of 3,500 lbs. (1,587 kg).

The Genuine NISSAN step bumper is considered a Class II ball mount.

Class III hitch

Class III trailer hitch equipment (receiver, ball mount and hitch ball) can be used to tow trailers of a maximum weight of 5,000 lbs. (2,268 kg).

Class IV hitch

Class IV trailer hitch equipment (receiver, ball mount and hitch ball) can be used to tow trailers of a maximum weight of 10,000 lbs. (4,535 kg). A weight distributing hitch should be used to tow trailers that weigh over 5,000 lbs. (2,268 kg).

Your vehicle may be equipped with Class IV trailer hitch equipment that has a 10,000 lbs. (4,535 kg) maximum weight rating, but your vehicle is only capable of towing the maximum trailer weights shown in the "Towing Load/Specification" chart in this section.

⚠ CAUTION

- **Special hitches which include frame reinforcements are required for towing above 2,000 lbs. (907 kg). Suitable Genuine NISSAN hitches, ball mounts and hitch balls for pickup trucks and sport utility vehicles are available at a NISSAN dealer.**
- **The hitch should not be attached to or affect the operation of the impact-absorbing bumper.**

⚠ WARNING

- **Do not use axle-mounted hitches.**
- **Do not modify the vehicle exhaust system, brake system, etc. to install a trailer hitch.**

- **To reduce the possibility of additional damage if your vehicle is struck from the rear, where practical, remove the ball mount from the receiver when not in use.**
- **Regularly check that all trailer hitch mounting bolts are securely mounted.**

Tire pressures

- When towing a trailer, inflate the vehicle tires to the recommended cold tire pressure indicated on the Tire and Loading Information label.
- Trailer tire condition, size, load rating and proper inflation pressure should be in accordance with the trailer and tire manufacturer's specifications.

Safety chains

Always use suitable safety chains between your vehicle and the trailer. The safety chains should be crossed and should be attached to the hitch, not to the vehicle bumper or axle. The safety chains can be attached to the bumper if the hitch ball is mounted to the bumper. Be sure to leave enough slack in the chains to permit turning corners.

Trailer lights

⚠ CAUTION

When splicing into the vehicle electrical system, a commercially available power-type module/converter must be used to provide power for all trailer lighting. This unit uses the vehicle battery as a direct power source for all trailer lights while using the vehicle tail light, stop light and turn signal circuits as a signal source. The module/converter must draw no more than 15 milliamps from the stop and tail lamp circuits. Using a module/converter that exceeds these power requirements may damage the vehicle's electrical system. See a reputable trailer dealer to obtain the proper equipment and to have it installed.

Trailer lights should comply with federal and/or local regulations. For assistance in hooking up trailer lights, it is recommended that you visit a NISSAN dealer or reputable trailer dealer. Vehicles equipped with the optional trailer tow package are equipped with a 7-pin trailer harness connector. A flat 4-pin harness is available from your dealer for vehicles without a tow package. If your trailer is equipped with a flat 4-pin connector, an adapter will be needed to connect the trailer lights to the vehicle. Adapters are available at auto parts stores and hitch retailers.

Trailer brakes

If your trailer is equipped with a braking system, make sure it conforms to federal and/or local regulations and that it is properly installed.

Vehicles equipped with a 7-pin trailer harness connector are pre-wired for a trailer brake controller. It is recommended that you visit a NISSAN dealer for a trailer brake adapter harness.

⚠ WARNING

Never connect a trailer brake system directly to the vehicle brake system.

When towing a trailer load of 3,500 lbs. (1587 kg) or more, trailers with a brake system MUST be used. However, most states require a separate braking system on trailers with a loaded weight above a specific amount. Make sure the trailer

meets the local regulations and the regulations where you plan to tow.

Several types of braking systems are available.

Surge Brakes -The surge brake actuator is mounted on the trailer tongue with a hydraulic line running to each trailer wheel. Surge brakes are activated by the trailer pushing against the hitch ball when the tow vehicle is braking. Hydraulic surge brakes are common on rental trailers and some boat trailers. In this type of system, there is no hydraulic or electric connection for brake operation between the tow vehicle and the trailer.

Electric Trailer Brakes -Electric braking systems are activated by an electronic signal sent from a trailer brake controller (special brake-sensing module). If electric trailer brakes are used, see "Electric trailer brake controller" (P. 537).

Have a professional supplier of towing equipment make sure the trailer brakes are properly installed and demonstrate proper brake function testing.

Electric trailer brake controller

Trailers equipped with electric brakes may require the installation of an aftermarket trailer brake controller.

A Genuine NISSAN jumper harness is available that is specifically designed to be used when installing an aftermarket brake controller.

Install the aftermarket electric trailer brake controller according to the manufacturer's instructions.

Pre-towing tips

- Be certain your vehicle maintains a level position when a loaded and/or unloaded trailer is hitched. Do not drive the vehicle if it has an abnormal nose-up or nose-down condition; check for improper tongue load, overload, worn suspension or other possible causes of either condition.
- Always secure items in the trailer to prevent load shift while driving.
- Keep the cargo load as low as possible in the trailer to keep the trailer center of gravity low.
- Load the trailer so approximately 60% of the trailer load is in the front half and 40% is in the back half. Also make sure the load is balanced side to side.
- Check your hitch, trailer tire pressure, vehicle tire pressure, trailer light operation, and trailer wheel lug nuts every time you attach a trailer to the vehicle.
- Be certain your rearview mirrors conform to all federal, state or local regulations. If not, install any mirrors required for towing before driving the vehicle.
- Determine the overall height of the vehicle and trailer so the required clearance is known.

Trailer towing tips

In order to gain skill and an understanding of the vehicle's behavior, you should practice turning, stopping and backing up in an area which is free from traffic. Steering stability and braking performance will be somewhat different than under normal driving conditions.

- Always secure items in the trailer to prevent load shift while driving.
- Lock the trailer hitch coupler with a pin or lock to prevent the coupler from inadvertently becoming unlatched.

- Avoid abrupt starts, acceleration or stops.
- Avoid sharp turns or lane changes.
- Always drive your vehicle at a moderate speed.
- When backing up, hold the bottom of the steering wheel with one hand. Move your hand in the direction in which you want the trailer to go. Make small corrections and back up slowly. If possible, have someone guide you when you are backing up.

Always block the wheels on both vehicle and trailer when parking. Parking on a slope is not recommended; however, if you must do so:

⚠ CAUTION

If you move the shift lever to the P (Park) position before blocking the wheels and applying the parking brake, transmission damage could occur.

1. Apply and hold the brake pedal.
2. Have someone place blocks on the downhill side of the vehicle and trailer wheels.
3. After the wheel blocks are in place, slowly release the brake pedal until the blocks absorb the vehicle load.
4. Apply the parking brake.
5. Shift the transmission into P (Park).
6. Make sure the 4WD shift indicator light (if so equipped) indicates the transfer case is in 4H, 4LO, or 2WD and that the ATP light is off. If the 4WD shift indicator light is flashing, or the ATP light is ON, make sure the transmission is in P (Park) and turn the 4WD switch to 2WD or 4H. For additional information, see "Automatic transmission park warning light (4x4 model)" (P. 114) and "Using 4-wheel drive (4WD)" (P. 374).
7. Turn off the engine.

To drive away:

1. Start the vehicle.
2. Apply and hold the brake pedal.
3. Shift the transmission into gear.
4. Release the parking brake.
5. Drive slowly until the vehicle and trailer are clear from the blocks.
6. Apply and hold the brake pedal.
7. Have someone retrieve and store the blocks.

- While going downhill, the weight of the trailer pushing on the tow vehicle may decrease overall stability. Therefore, to maintain adequate control, reduce your speed and shift to a lower gear. Avoid long or repeated use of the brakes when descending a hill, as this reduces their effectiveness and could cause overheating. Shifting to a lower gear instead provides "engine braking" and reduces the need to brake as frequently.
- If the engine coolant temperature rises to a high temperature, see "If your vehicle overheats" (P. 417).
- Trailer towing requires more fuel than normal circumstances.
- Avoid towing a trailer for your vehicle's first 500 miles (805 km).
- For the first 500 miles (805 km) that you do tow, do not drive over 50 mph (80 km/h).
- Have your vehicle serviced more often than at intervals specified. For additional information, see the "Maintenance and schedules" section of this manual.
- When making a turn, your trailer wheels will be closer to the inside of the turn than your vehicle wheels. To compensate for this, make a larger than normal turning radius during the turn.

- Crosswinds and rough roads will adversely affect vehicle/trailer handling, possibly causing vehicle sway. When being passed by larger vehicles, be prepared for possible changes in crosswinds that could affect vehicle handling.

Do the following if the trailer begins to sway:

1. Take your foot off the accelerator pedal to allow the vehicle to coast and steer as straight ahead as the road conditions allow. This combination will help stabilize the vehicle
   - Do not correct trailer sway by steering or applying the brakes.
2. When the trailer sway stops, gently apply the brakes and pull to the side of the road in a safe area.
3. Try to rearrange the trailer load so it is balanced as described in this section.

- Be careful when passing other vehicles. Passing while towing a trailer requires considerably more distance than normal passing. Remember, the length of the trailer must also pass the other vehicle before you can safely change lanes.
- Downshift the transmission to a lower gear for engine braking when driving down steep or long hills. This will help slow the vehicle without applying the brakes.
- Avoid holding the brake pedal down too long or too frequently. This could cause the brakes to overheat, resulting in reduced braking efficiency.
- Increase your following distance to allow for greater stopping distances while towing a trailer. Anticipate stops and brake gradually.
- NISSAN recommends that the cruise control not be used while towing a trailer.
- Some states or provinces have specific regulations and speed limits for vehicles that are towing trailers. Obey the local speed limits.
- Check your hitch, trailer wiring harness connections, and trailer wheel lug nuts after 50 miles (80 km) of travel and at every break.
- When launching a boat, don't allow the water level to go over the exhaust tail pipe or rear bumper.
- Make sure you disconnect the trailer lights before backing the trailer into the water or the trailer lights may burn out.

When towing a trailer, final drive gear oil should be replaced and transmission oil/fluid should be changed more frequently. For additional information, refer to the "Do-it-yourself" section in this manual.

Tow mode (if so equipped)

Using tow mode is recommended when pulling a heavy trailer or hauling a heavy load. Push the TOW MODE switch to activate tow mode. The indicator light on the TOW MODE switch illuminates when tow mode is selected. Push the TOW MODE switch again to turn tow mode off. Tow mode is automatically canceled when the ignition switch is turned off.

Tow mode includes the following features:

- Grade logic — Adjusts transmission shifts when pulling a trailer or hauling a load up a grade.
- Downhill Speed Control (DSC) — automatically downshifts when driving down a grade with a trailer or heavy load to help control vehicle speed.

Driving the vehicle in the tow mode with no trailer/load or light trailer/light load will not cause any damage. However, fuel economy may be reduced and the transmission/engine driving characteristics may feel unusual.

When towing a trailer, final drive gear oil should be replaced and transmission oil/fluid should be changed more frequently. For additional information, see the "Do-it-yourself" section of this manual.

FLAT TOWING – 4WD WITH AUTOMATIC TRANSMISSION

Towing a vehicle behind a recreational vehicle, such as a motor home, is sometimes called flat towing, dinghy towing or 4 down towing.

⚠ CAUTION

- **DO NOT flat tow a 4WD vehicle equipped with an automatic transmission. Flat towing or using a vehicle dolly WILL DAMAGE internal transmission parts due to lack of lubrication.**
- **For emergency towing procedures, see "Towing recommended by NISSAN" (P. 418).**

FLAT TOWING – 2WD WITH AUTOMATIC TRANSMISSION

Towing a vehicle behind a recreational vehicle, such as a motor home, is sometimes called flat towing, dinghy towing or 4 down towing.

⚠ CAUTION

- **Failure to follow these guidelines can result in severe transmission damage.**
- **Whenever flat towing your vehicle, always tow forward, never backward.**
- **DO NOT tow any automatic transmission vehicle with all four wheels on the ground. Doing so WILL DAMAGE internal transmission parts due to lack of transmission lubrication.**
- **For emergency towing procedures, see "Towing recommended by NISSAN" (P. 418).**

To tow a vehicle equipped with an automatic transmission, an appropriate vehicle dolly **MUST** be placed under the towed vehicle's drive wheels. **Always** follow the dolly manufacturer's recommendations when using their product.

AUTOMATIC TRANSMISSION

To tow a vehicle equipped with an automatic transmission, an appropriate vehicle dolly **MUST** be placed under the towed vehicle's drive wheels. **Always** follow the dolly manufacturer's recommendations when using their product.

NOTE:

If the battery is completely drained the transmission will not manually shift to other positions.

DOT (Department of Transportation) Quality Grades: All passenger car tires must conform to federal safety requirements in addition to these grades.

Quality grades can be found where applicable on the tire sidewall between tread shoulder and maximum section width. For example:

Treadwear 200 Traction AA Temperature A

Treadwear

The treadwear grade is a comparative rating based on the wear rate of the tire when tested under controlled conditions on a specified government test course. For example, a tire graded 150 would wear one and one-half (1 1/2) times as well on the government course as a tire graded 100. The relative performance of tires depends upon the actual conditions of their use, however, and may depart significantly from the norm due to variations in driving habits, service practices and differences in road characteristics and climate.

Traction AA, A, B and C

The traction grades, from highest to lowest, are AA, A, B, and C. Those grades represent the tire's ability to stop on wet pavement as measured under controlled conditions on specified government test surfaces of asphalt and concrete. A tire marked C may have poor traction performance.

⚠WARNING

The traction grade assigned to this tire is based on straight-ahead braking traction tests, and does not include acceleration, cornering, hydroplaning, or peak traction characteristics.

Temperature A, B and C

The temperature grades are A (the highest), B, and C, representing the tire's resistance to the generation of heat, and its ability to dissipate heat when tested under controlled conditions on a specified indoor laboratory test wheel. Sustained high temperature can cause the material of the tire to degenerate and reduce tire life, and excessive temperature can lead to sudden tire failure. The grade C corresponds to a level of performance which all passenger car tires must meet under the Federal Motor Safety Standard No. 109. Grades B and A represent higher levels of performance on the laboratory test wheel than the minimum required by law.

⚠ WARNING

The temperature grade for this tire is established for a tire that is properly inflated and not overloaded. Excessive speed, under-inflation, or excessive loading, either separately or in combination, can cause heat build-up and possible tire failure.

For USA

If you believe that your vehicle has a defect which could cause a crash or could cause injury or death, you should immediately inform the National Highway Traffic Safety Administration (NHTSA) in addition to notifying NISSAN.

If NHTSA receives similar complaints, it may open an investigation, and if it finds that a safety defect exists in a group of vehicles, it may order a recall and remedy campaign. However, NHTSA cannot become involved in individual problems between you, your dealer, or NISSAN.

To contact NHTSA, you may call the Vehicle Safety Hotline toll-free at 1-888-327-4236 (TTY: 1-888-275-9171); go to http://www.safercar.gov; or write to: Administrator, NHTSA, 1200 New Jersey Avenue, SE Washington, D.C. 20590. You can also obtain other information about motor vehicle safety from http://www.safercar.gov.

You may notify NISSAN by contacting our Consumer Affairs Department, toll-free, at 1-800-NISSAN-1.

For Canada

If you believe that your vehicle has a defect which could cause a crash or could cause injury or death, you should immediately inform Transport Canada in addition to notifying NISSAN.

If Transport Canada receives complaints, it may open an investigation, and if it finds that a safety defect exists in a group of vehicles, it may request that NISSAN conduct a recall campaign. However, Transport Canada cannot become involved in individual problems between you, your dealer, or NISSAN.

You may contact Transport Canada's Defect Investigations and Recalls Division toll free at 1-800-333-0510. You may also report safety defects online at:
http://www.tc.gc.ca/eng/motorvehiclesafety/menu.htm (English speakers) or
http://www.tc.gc.ca/fra/securiteautomobile/menu.htm (French speakers)

Or contact Transport Canada by mail at:
Transport Canada Motor Vehicle Safety Investigations Laboratory
80 Noel Street Gatineau, QC J8Z0A1

Additional information concerning motor vehicle safety may be obtained from Transport Canada's Road Safety Information Centre at 1-800-333-0371 or online at www.tc.gc.ca/roadsafety (English speakers) or www.tc.gc.ca/securiteroutiere (French speakers).

To notify NISSAN of any safety concerns please contact our Consumer Information Centre toll free at 1-800-387-0122.

READINESS FOR INSPECTION/ MAINTENANCE (I/M) TEST

⚠ WARNING

A vehicle equipped with Four-Wheel Drive (4WD) should never be tested using a two wheel dynamometer (such as the dynamometers used by some states for emissions testing), or similar equipment. Make sure you inform the test facility personnel that your vehicle is equipped with 4WD before it is placed on a dynamometer. Using the wrong test equipment may result in transmission damage or unexpected vehicle movement which could result in serious vehicle damage or personal injury.

Due to legal requirements in some states and Canadian Provinces, your vehicle may be required to be in what is called the "ready condition" for an Inspection/Maintenance (I/M) test of the emission control system.

The vehicle is set to the "ready condition" when it is driven through certain driving patterns. Usually, the ready condition can be obtained by ordinary usage of the vehicle.

If a powertrain system component is repaired or the battery is disconnected, the vehicle may be reset to a "not ready" condition. Before taking the I/M test, check the vehicle's inspection/maintenance test readiness condition. Place the ignition switch in the ON position without starting the engine. If the Malfunction Indicator Light (MIL) comes on steady for 20 seconds and then blinks for 10 seconds, the I/M test condition is "not ready". If the MIL does not blink after 20 seconds, the I/M test condition is "ready". It is recommended that you visit a NISSAN dealer to set the "ready condition" or to prepare the vehicle for testing.

EMISSION CONTROL SYSTEM WARRANTY

Your NISSAN vehicle is covered by the following emission warranties:

For USA

1. Emission Defects Warranty
2. Emissions Performance Warranty

Details of this warranty may be found with other vehicle warranties in your Warranty Information Booklet which comes with your NISSAN vehicle. If you did not receive a Warranty Information Booklet, or it is lost, you may obtain a replacement by writing to:

- Nissan North America, Inc.
  Consumer Affairs Department
  P.O. Box 685003
  Franklin, TN 37068-5003

For Canada

Emission Control System Warranty

Details of this warranty may be found with other vehicle warranties in your Warranty Information Booklet which comes with your NISSAN vehicle. If you did not receive a Warranty Information Booklet, or it is lost, you may obtain a replacement by writing to:

- Nissan Canada Inc.
  5290 Orbitor Drive
  Mississauga, Ontario, L4W 4Z5

EVENT DATA RECORDERS (EDR)

This vehicle is equipped with an Event Data Recorder (EDR). The main purpose of an EDR is to record, in certain crash or near crash-like situations, such as an air bag deployment or hitting a road obstacle, data that will assist in understanding how a vehicle's systems performed. The EDR is designed to record data related to vehicle dynamics and safety systems for a short period of time, typically 30 seconds or less. The EDR in this vehicle is designed to record such data as:

- How various systems in your vehicle were operating;
- Whether or not the driver and passenger safety belts were buckled/fastened;
- How far (if at all) the driver was depressing the accelerator and/or brake pedal; and,
- How fast the vehicle was traveling.
- Sounds are not recorded.

These data can help provide a better understanding of the circumstances in which crashes and injuries occur. NOTE: EDR data are recorded by your vehicle only if a non-trivial crash situation occurs; no data are recorded by the EDR under normal driving conditions and no personal data (e.g., name, gender, age, and crash location) are recorded. However, other parties, such as

law enforcement, could combine the EDR data with the type of personally identifying data routinely acquired during a crash investigation.

To read data recorded by an EDR, special equipment is required, and access to the vehicle or the EDR is needed. In addition to the vehicle manufacturer and NISSAN dealer, other parties, such as law enforcement, that have the special equipment, can read the information if they have access to the vehicle or the EDR.

EDR data will only be accessed with the consent of the vehicle owner or lessee or as otherwise required or permitted by law.

OWNER'S MANUAL/SERVICE MANUAL ORDER INFORMATION

Genuine NISSAN Service Manuals for this model year and prior can be purchased. A Genuine NISSAN Service Manual is the best source of service and repair information for your vehicle. This manual is the same one used by the factory-trained technicians working at NISSAN dealerships. Genuine NISSAN Owner's Manuals can also be purchased.

For USA

For current pricing and availability of Genuine **NISSAN Service Manuals,** contact:

www.nissan-techinfo.com

For current pricing and availability of Genuine **NISSAN Owner's Manuals,** contact:

www.HELMinc.com

For Canada

To purchase a copy of a Genuine NISSAN Service Manual or Owner's Manual, for this model year and prior, please contact your nearest NISSAN dealer. For the phone number and location of a NISSAN dealer in your area, call the NISSAN Information Center at 1-800-387-0122 and a bilingual NISSAN representative will assist you.

MEMO

11 Index

4

4-Wheel Drive 374
4WD 374

A

Active Brake Limited Slip (ABLS) system 386
Air bag (See supplemental restraint system) 79
Air bag system
  Front (See supplemental front impact air bag system) 87
Air bag warning labels 100
Air bag warning light 100, 117
Air bag warning light, supplemental 100, 117
Air cleaner housing filter 449
Air conditioner
  Air conditioner operation 256, 262
  Air conditioner service 266
  Air conditioner specification label . . .514
  Air conditioner system refrigerant and oil recommendations 507
  Heater and air conditioner (automatic) (if so equipped) 261
  Heater and air conditioner controls . .262
  Servicing air conditioner 266
Air flow charts 257
Alarm system (See vehicle security system) 144
Anchor point locations 41
Antenna 266
Anti-lock brake warning light 114
Anti-lock Braking System (ABS) 385
Antifreeze 402
Autolight switch 149
Automatic
  Automatic power window switch 183
  Driving with automatic transmission 288
Automatic anti-glare inside mirror 218
Automatic door locks 199
Automatic Emergency Braking (AEB) with Pedestrian Detection 347
Automatic transmission fluid temperature gauge 111

B

Battery 402, 445
  Charge warning light 116
Battery replacement
  NISSAN Intelligent Key® 454, 455
Before starting the engine 286
Belt (See drive belt) 447
Blind Spot Warning (BSW) 301
Booster seats 73
Brake
  Anti-lock Braking System (ABS) 385
  Brake fluid 443
  Brake light (See stop light) 458
  Brake system 384
  Brake warning light 115
  Brake wear indicators 123, 451
  Parking brake operation 293
  Self-adjusting brakes 451
Brake fluid 443
Brake precautions 384
Brake system 384
Brakes 451
Break-in schedule 373
Brightness control
  Instrument panel 154
Bulb check/instrument panel 114
Bulb replacement 458

C

Capacities and recommended fuel/lubricants 501
Car phone or CB radio 266
Cargo (See vehicle loading information) 516
Cargo carrier 180
Cargo lamp switch 156
Cargo light 187
Check tire pressure 138, 140

Child restraint with top tether strap 41
Child restraints 33, 34, 35, 38
Precautions on child restraints 47, 50, 62, 73
Top tether strap anchor point locations 41
Child safety rear door lock 199
Cleaning 450
Cleaning aluminum alloy wheels 425
Cleaning exterior and interior 424, 426
Coat hooks 180
Cold weather driving 402
Console box 177
Controls
Heater and air conditioner controls. . .262
Heater and air conditioner controls (manual) 252
Coolant
Capacities and recommended fuel/lubricants 501
Changing engine coolant 435
Checking engine coolant level 435
Engine coolant temperature gauge. . .109
Corrosion protection 429
Cup holders 178
Curtain side-impact and rollover air bag . .96

D

Daytime Running Lights (DRL) system . . .153
Dimensions and weights. 509
Dimmer switch for instrument panel. . . .154
Door locks 196
Doors 196
Drive belt 447
Driving
Cold weather driving. 402
Driving with automatic transmission. .288
Precautions when starting and driving 273, 280
Driving the vehicle 287

E

Eco Drive Report. 113
Economy - fuel 374
Electronic locking rear differential (E-Lock) system 382
Electronic locking rear differential (E-Lock) system switch. 160
Emergency call (SOS) button. 163
Emergency engine shutoff. 284, 406
Emission control information label 513
Emission control system warranty 544
Engine
Before starting the engine 286
Capacities and recommended fuel/lubricants 501
Changing engine coolant 435
Changing engine oil 437
Changing engine oil filter 437
Checking engine coolant level 435
Checking engine oil level 436
Engine compartment check locations 433
Engine coolant temperature gauge. . .109
Engine cooling system 434
Engine oil 436
Engine oil and oil filter recommendation. 506
Engine oil pressure gauge 112
Engine oil pressure warning light. 116
Engine oil viscosity 506
Engine serial number. 512
Engine specifications 508
Engine Block Heater. 404
Engine coolant temperature gauge 109
Engine oil pressure gauge. 112
Event Data recorders 544
Exhaust gas (Carbon monoxide) 273
Explanation of maintenance items. 476
Explanation of scheduled maintenance items 479
Extended storage switch 172
Eyeglass case 178

F

F.M.V.S.S./C.M.V.S.S. certification label 513
Flashers (See hazard warning flasher switch) 406
Flat tire 407, 408
Flat towing your vehicle. 540
Floor mat positioning aid. 428
Fluid
Brake fluid 443
Capacities and recommended fuel/lubricants 501
Engine coolant 434

Engine oil 436
Power steering fluid 442
Windshield-washer fluid 443
Fog light switch 155
Forward Driving Aids
System Temporarily
Unavailable 142, 334, 354, 366
Four-Wheel Drive 374
Front air bag system (See supplemental restraint system) 87
Front power seat adjustment 15
Front seats 13
Front-door pocket 173
Fuel
Capacities and recommended fuel/lubricants 501
Fuel economy 374
Fuel gauge 110
Fuel octane rating 505
Fuel recommendation 503
Fuel-filler cap 214
Fuel-filler lid 214
Loose fuel cap warning 137
Fuel efficient driving tips 373
Fuel gauge 110
Fuel-filler door 214
Fuses 452
Fusible links 453

G

Garage door opener, HomeLink® Universal Transceiver 187, 188, 190, 191
Gas cap 214
Gauge
Automatic transmission fluid temperature gauge 111
Engine coolant temperature gauge . . .109
Engine oil pressure gauge 112
Fuel gauge 110
Odometer 108
Speedometer 108
Tachometer 109
Trip odometer 108
Voltmeter 112
General maintenance 476
Glove box 177

H

Hazard warning flasher switch 406
Head restraints 20
Headlight and turn signal switch 148
Headlight control switch 148
Headlights 457
Heated mirrors 220
Heated seat switches 156
Heated steering wheel switch 157
Heater
Heater and air conditioner (automatic) (if so equipped) 261
Heater and air conditioner controls . . .262
Heater operation 254, 263
Heater and air conditioner (automatic) . .261
Hill descent control switch 158
Hill descent control system 390
Hill start assist system 390
HomeLink® Universal Transceiver 187, 188, 190, 191
Hood release 213
Horn 155

I

Idling Stop System 395
Ignition switch
Push-button ignition switch 282
Immobilizer system 146, 285
In-cabin microfilter 449
Increasing fuel economy 374
Indicator lights and audible reminders (See warning/indicator lights and audible reminders) 114
Inside automatic anti-glare mirror 218
Instrument brightness control 154
Instrument panel 6, 106
Instrument panel dimmer switch 154
Intelligent Around View® Monitor 236
Intelligent Cruise Control 319
Intelligent Driver Alertness (I-DA) 370
Intelligent Forward Collision Warning (I-FCW) 358
Intelligent Key battery 454
Intelligent Key system
Key operating range 201
Key operation 202
Mechanical key 195
Remote keyless entry operation 206
Troubleshooting guide 209

Interior light 186
iPod®/iPhone® 267

J

Jump seat 17
Jump starting 415, 446

K

Key. 194
Keyless entry
With Intelligent Key system
(See Intelligent Key system). 206
Keys
NISSAN Intelligent Key®. 194, 200
NISSAN Vehicle Immobilizer System
keys 196

L

Labels
Air conditioner specification label 514
Emission control information label . . .513
Engine serial number. 512
F.M.V.S.S./C.M.V.S.S. certification label . .513
Tire and Loading Information label . . .514
Vehicle identification number (VIN) . . .512
Vehicle identification number (VIN)
plate 512
Warning labels (for SRS) 100
Lane Departure Warning (LDW) 296
LED Daytime Running Lights (DRL)
system 153
License plate, Installing front license
plate. 515
Light
Air bag warning light. 100, 117
Brake light (See stop light) 458
Bulb check/instrument panel. 114
Bulb replacement. 458
Charge warning light 116
Exterior and Interior lights 458
Fog light switch 155
Fog lights 457
Headlight and turn signal switch 148
Headlight control switch. 148
Headlights 457
Interior light 186
Light bulbs 457
Low tire pressure warning light 119
Low windshield-washer fluid warning
light 138
Passenger air bag and status light 90
Security indicator light 117
Warning/indicator lights and audible
reminders 114
Lights 457
Map lights. 186
Lock
Child safety rear door lock 199
Door locks 196
Power door locks 198
Loose fuel cap warning 137
Low fuel warning light 121, 138
Low tire pressure warning light 119
Low windshield-washer fluid warning
light 138
Luggage (See vehicle loading
information) 516

M

Maintenance
General maintenance 476
Inside the vehicle 477
Maintenance precautions. 432
Outside the vehicle 477
Seat belt maintenance 32
Under the hood and vehicle 478
Maintenance requirements 476
Maintenance schedules. 481
Malfunction indicator light 121
Manual front seat adjustment. 14
Map lights 186
Map pocket. 173
Meters and gauges 107, 111
Instrument brightness control 154
Mirror
Automatic anti-glare inside mirror . . .218
Heated mirrors 220
Outside mirrors 218
Rearview 218
Vanity mirror 217
Mirror defroster 148
Mirrors 218
Moonroof. 184, 427
Moving Object Detection (MOD). 248

N

NISSAN Intelligent Key® 194, 200
NISSAN Vehicle Immobilizer System 146, 285
NissanConnect® Owner's Manual. 227

O

Octane rating (See fuel octane rating). . .505
Odometer 108
Off-road recovery 278
Oil
  Capacities and recommended fuel/lubricants 501
  Changing engine oil 437
  Changing engine oil filter 437
  Checking engine oil level 436
  Engine oil 436
  Engine oil and oil filter recommendation. 506
  Engine oil viscosity 506
Outside mirror defroster switch. 148
Outside mirrors 218
Overhead sunglasses holder. 178
Overheat
  If your vehicle overheats 417
Owner's manual order form 545
Owner's manual/service manual order information 545

P

Parking
  Parking brake operation. 293
  Parking/parking on hills 383
Parking aids system switch 162
Parking brake 293
Power
  Power door locks 198
  Power outlet 169, 170
  Power steering fluid 442
  Power steering system 384
  Power windows 181
  Rear power windows 183
Power inverter switch 161
Power outlet 169, 170
Power steering 384
Power steering fluid 442
Precautions
  Brake precautions 384
  Maintenance precautions. 432
  On-pavement and off-road driving precautions 278
  Precautions on booster seats 47, 50, 62, 73
  Precautions on child restraints 47, 50, 62, 73
  Precautions on seat belt usage 25
  Precautions on supplemental restraint system 79
  Precautions when starting and driving 273, 280
Push starting 417

R

Radio
  Car phone or CB radio 266
Readiness for inspection maintenance (I/M) test 543
Rear Automatic Braking (RAB) 121, 342
Rear Cross Traffic Alert (RCTA) 311
Rear Door Alert. 138, 139, 168
Rear power windows 183
Rear seat 17
Rear seat belt warning. 139
Rear sliding window 183
Rear Sonar System (RSS) 391
Rearview mirror 218
RearView Monitor 228
Recommended Fluids 501
Recorders
  Event Data 544
Refrigerant recommendation 507
Registering a vehicle in another country 512
Remote Engine Start 211, 287
Remote Start. 211
Reporting safety defects (US only) 542

S

Safety
  Child safety rear door lock 199
  Child seat belts. 35, 47, 50, 62, 73
  Reporting safety defects (US only). . . .542

Seat
Jump seat 17
Seat adjustment
Front manual seat adjustment 14
Front power seat adjustment 15
Seat belt
Child safety 33
Infants and small children 34
Injured person. 28
Larger children 34
Precautions on seat belt usage 25
Pregnant women. 28
Seat belt extenders 32
Seat belt maintenance 32
Seat belts 25, 429
Shoulder belt height adjustment 31
Three-point type with retractor 29
Seat belt extenders 32
Seat belt warning light 28, 117
Seatback pockets. 174
Seats
Adjustment. 13
Front seats 13
Manual front seat adjustment 14
Rear seat 17
Security indicator light 117
Security system (NISSAN Vehicle Immobilizer System), engine start 146, 285
Security systems
Vehicle security system 144, 145
Self-adjusting brakes 451
Service manual order form 545
Servicing air conditioner 266
Shifting
Automatic transmission 289
Shoulder belt height adjustment 31
Side air bag system (See supplemental side air bag, curtain and rollover air bag systems). 96
Sonar
Rear system 391
Spark plug replacement 448
Spark plugs 448
Specifications. 508
Speedometer 108
Speedometer and odometer 108
SRS warning label 100
Stability control 387
Standard maintenance. 482
Starting
Before starting the engine 286
Jump starting 415, 446
Precautions when starting and driving 273, 280
Push starting 417
Starting the engine (gasoline engine only). 286
Steering
Power steering fluid 442
Power steering system 384
Steering wheel 216
Stop light. 458
Storage 173
Storage tray 176
Sun visors 217
Sunglasses case 178
Sunglasses holder 178
Sunroof. 427
Supplemental air bag warning labels . . .100
Supplemental air bag warning light . .100, 117
Supplemental front impact air bag system 87
Supplemental restraint system
Information and warning labels 100
Precautions on supplemental restraint system 79
Supplemental restraint system (Supplemental air bag system) 79
Switch
Autolight switch 149
Automatic power window switch 183
Electronic locking rear differential (E-Lock) system switch 160
Fog light switch 155
Hazard warning flasher switch 406
Headlight and turn signal switch 148
Headlight control switch. 148
Hill descent control switch 158
Instrument brightness control 154
Power door lock switch 198
Power inverter switch. 161
Tow mode switch 163
Turn signal switch. 154

T

Tachometer 109
Tailgate. 220
Temperature gauge
Engine coolant temperature gauge. . .109

Theft (NISSAN Vehicle Immobilizer System), engine start 146, 285
Three-way catalyst. 274
Tie down hooks. 224
Tire
Flat tire 407, 408
Spare tire. 409, 410, 411, 473
Tire and Loading Information label . . .514
Tire chains 469
Tire dressing. 426
Tire pressure 461
Tire rotation 470
Tires of 4-wheel drive 472
Types of tires 468
Uniform tire quality grading. 541
Wheel/tire size. 509
Wheels and tires. 461, 509
Tire pressure
Low tire pressure warning light. 119
Tire Pressure Monitoring System (TPMS). 274
Top tether strap child restraint 41
Tow mode switch. 163
Towing
2-wheel drive models 420
4-wheel drive models 419
Flat towing 540
Tow truck towing 418
Towing load/specification 530
Trailer towing 526
Towing a trailer 526
Traffic Sign Recognition (TSR) 293
Transceiver
HomeLink® Universal Transceiver 187, 188, 190, 191
Transmission
Driving with automatic transmission. .288
Travel (See registering a vehicle in another country). 512
Trip odometer. 108
Truck - camper loading. 524
Truck box 220
Turn signal switch 154

U

Under seat storage bin 175
Underbody cleaning. 425
Uniform tire quality grading 541
USB Charging Ports 165
Using four wheel drive (4WD). 374

V

Vanity mirror. 217
Variable voltage control system. 447
Vehicle dimensions and weights 509
Vehicle Dynamic Control (VDC) OFF switch. 158
Vehicle Dynamic Control (VDC) system . .387
Vehicle identification. 512
Vehicle identification number (VIN) 512
Vehicle identification number (VIN) plate. 512
Vehicle immobilizer system 146, 285
Vehicle information display. 124
Vehicle loading information 516
Vehicle recovery 421
Vehicle security system 144, 145
Vehicle security system (NISSAN Vehicle Immobilizer System), engine start . .146, 285
Ventilators 252
Visors 217
Voltmeter 112

W

Warning
Air bag warning light. 100, 117
Anti-lock brake warning light 114
Battery charge warning light 116
Brake warning light 115
Engine oil pressure warning light. . . .116
Hazard warning flasher switch 406
Loose fuel cap warning. 137
Low fuel warning light. 121, 138
Low tire pressure warning light. 119
Low windshield-washer fluid warning light 138
Passenger air bag and status light 90
Seat belt warning light 28, 117
Supplemental air bag warning light 100, 117
Vehicle security system 144, 145
Warning labels (for SRS) 100
Warning/indicator lights and audible reminders 114
Warning lights 114

Warning lights, indicator lights and audible reminders. 114
Warning systems switch 160
Warning/indicator lights and audible reminders. 114
Audible reminders 114
Indicator lights 114
Warning lights 114
Washing 424
Waxing 425
Weights (See dimensions and weights) . .509
Wheel/tire size 509
Wheels and tires 461, 509
Cleaning aluminum alloy wheels 425
When traveling or registering in another country 512
Window(s)
Cleaning 425
Windows 181
Locking passengers' windows 183
Power windows 181
Rear power windows 183
Rear sliding window 183
Windshield wiper blades 450
Windshield-washer fluid 443
Wiper
Wiper blades 450
Wiper and washer switch 147
Wireless Charger 166

MEMO

MEMO

MEMO

MEMO

MEMO

MEMO

To view the digital NissanConnect manual, go to
www.nissanquickguide.com/#/guide/2025/frontier/browse
or snap this QR code with an appropriate QR code reader.

Printing : December 2024
Publication No.: OM25EA 0D41U1
Printed in the U.S.A.

D41-D